National Semiconductor

November 1994

54F/74F191
Up/Down Binary Counter with Preset and Ripple Clock

General Description

The ’F191 is a reversible modulo-16 binary counter featuring synchronous counting and asynchronous presetting. The preset feature allows the ’F191 to be used in programmable dividers. The Count Enable input, the Terminal Count output and Ripple Clock output make possible a variety of methods of implementing multistage counters. In the counting modes, state changes are initiated by the rising edge of the clock.

Features

- High-Speed—125 MHz typical count frequency
- Synchronous counting
- Asynchronous parallel load
- Cascadable

Commercial	Military	Package Number	Package Description
74F191PC		N16E	16-Lead (0.300″ Wide) Molded Dual-In-Line
	54F191DM (Note 2)	J16A	16-Lead Ceramic Dual-In-Line
74F191SC (Note 1)		M16A	16-Lead (0.150″ Wide) Molded Small Outline, JEDEC
74F191SJ (Note 1)		M16D	16-Lead (0.300″ Wide) Molded Small Outline, EIAJ
	54F191FM (Note 2)	W16A	16-Lead Cerpack
	54F191LM (Note 2)	E20A	20-Lead Ceramic Leadless Chip Carrier, Type C

Note 1: Devices also available in 13″ reel. Use suffix = SCX and SJX.

Note 2: Military grade device with environmental and burn-in processing. Use suffix = DMQB, FMQB and LMQB.

Logic Symbols

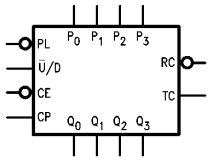

TL/F/9495–1

IEEE/IEC

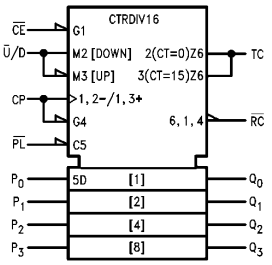

TL/F/9495–4

Connection Diagrams

Pin Assignment for DIP, SOIC and Flatpak

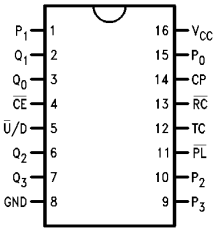

TL/F/9495–2

Pin Assignment for LCC

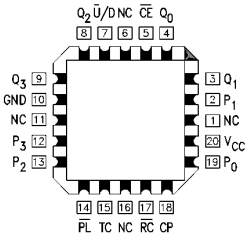

TL/F/9495–3

TRI-STATE® is a registered trademark of National Semiconductor Corporation.

©1995 National Semiconductor Corporation TL/F/9495

RRD-B30M75/Printed in U. S. A.

Unit Loading/Fan Out

Pin Names	Description	54F/74F	
		U.L. HIGH/LOW	Input I_{IH}/I_{IL} Output I_{OH}/I_{OL}
$\overline{CE}$	Count Enable Input (Active LOW)	1.0/3.0	20 μA/ −1.8 mA
CP	Clock Pulse Input (Active Rising Edge)	1.0/1.0	20 μA/ −0.6 mA
P_0–P_3	Parallel Data Inputs	1.0/1.0	20 μA/ −0.6 mA
$\overline{PL}$	Asynchronous Parallel Load Input (Active LOW)	1.0/1.0	20 μA/ −0.6 mA
$\overline{U}$/D	Up/Down Count Control Input	1.0/1.0	20 μA/ −0.6 mA
Q_0–Q_3	Flip-Flop Outputs	50/33.3	−1 mA/20 mA
$\overline{RC}$	Ripple Clock Output (Active LOW)	50/33.3	−1 mA/20 mA
TC	Terminal Count Output (Active HIGH)	50/33.3	−1 mA/20 mA

Functional Description

The ’F191 is a synchronous up/down 4-bit binary counter. It contains four edge-triggered flip-flops, with internal gating and steering logic to provide individual preset, count-up and count-down operations.

Each circuit has an asynchronous parallel load capability permitting the counter to be preset to any desired number. When the Parallel Load ($\overline{PL}$) input is LOW, information present on the Parallel Data inputs (P_0–P_3) is loaded into the counter and appears on the Q outputs. This operation overrides the counting functions, as indicated in the Mode Select Table.

A HIGH signal on the $\overline{CE}$ input inhibits counting. When $\overline{CE}$ is LOW, internal state changes are initiated synchronously by the LOW-to-HIGH transition of the clock input. The direction of counting is determined by the $\overline{U}$/D input signal, as indicated in the Mode Select Table. $\overline{CE}$ and $\overline{U}$/D can be changed with the clock in either state, provided only that the recommended setup and hold times are observed.

Two types of outputs are provided as overflow/underflow indicators. The Terminal Count (TC) output is normally LOW and goes HIGH when a circuit reaches zero in the count-down mode or reaches 15 in the count-up mode. The TC output will then remain HIGH until a state change occurs, whether by counting or presetting or until $\overline{U}$/D is changed. The TC output should not be used as a clock signal because it is subject to decoding spikes.

The TC signal is also used internally to enable the Ripple Clock ($\overline{RC}$) output. The $\overline{RC}$ output is normally HIGH. When $\overline{CE}$ is LOW and TC is HIGH, the $\overline{RC}$ output will go LOW when the clock next goes LOW and will stay LOW until the clock goes HIGH again. This feature simplifies the design of multistage counters, as indicated in *Figures 1* and *2.* In *Figure 1*, each $\overline{RC}$ output is used as the clock input for the next higher stage. This configuration is particularly advantageous when the clock source has a limited drive capability, since it drives only the first stage. To prevent counting in all stages it is only necessary to inhibit the first stage, since a HIGH signal on $\overline{CE}$ inhibits the $\overline{RC}$ output pulse, as indicated in the $\overline{RC}$ Truth Table. A disadvantage of this configuration, in some applications, is the timing skew between state changes in the first and last stages. This represents the cumulative delay of the clock as it ripples through the preceding stages.

A method of causing state changes to occur simultaneously in all stages is shown in *Figure 2*. All clock inputs are driven in parallel and the $\overline{RC}$ outputs propagate the carry/borrow signals in ripple fashion. In this configuration the LOW state duration of the clock must be long enough to allow the negative-going edge of the carry/borrow signal to ripple through to the last stage before the clock goes HIGH. There is no such restriction on the HIGH state duration of the clock, since the $\overline{RC}$ output of any device goes HIGH shortly after its CP input goes HIGH.

The configuration shown in *Figure 3* avoids ripple delays and their associated restrictions. The $\overline{CE}$ input for a given stage is formed by combining the TC signals from all the preceding stages. Note that in order to inhibit counting an enable signal must be included in each carry gate. The simple inhibit scheme of *Figures 1* and *2* doesn’t apply, because the TC output of a given stage is not affected by its own $\overline{CE}$.

Mode Select Table

Inputs				Mode
$\overline{PL}$	$\overline{CE}$	$\overline{U}$/D	CP	
H	L	L	↗	Count Up
H	L	H	↗	Count Down
L	X	X	X	Preset (Asyn.)
H	H	X	X	No Change (Hold)

$\overline{RC}$ Truth Table

Inputs			Output
$\overline{CE}$	TC*	CP	$\overline{RC}$
L	H	⊓	⊓
H	X	X	H
X	L	X	H

*TC is generated internally
H = HIGH Voltage Level
L = LOW Voltage Level
X = Immaterial
↗ = LOW-to-HIGH Clock Transition
⊓ = LOW Pulse

Logic Diagram

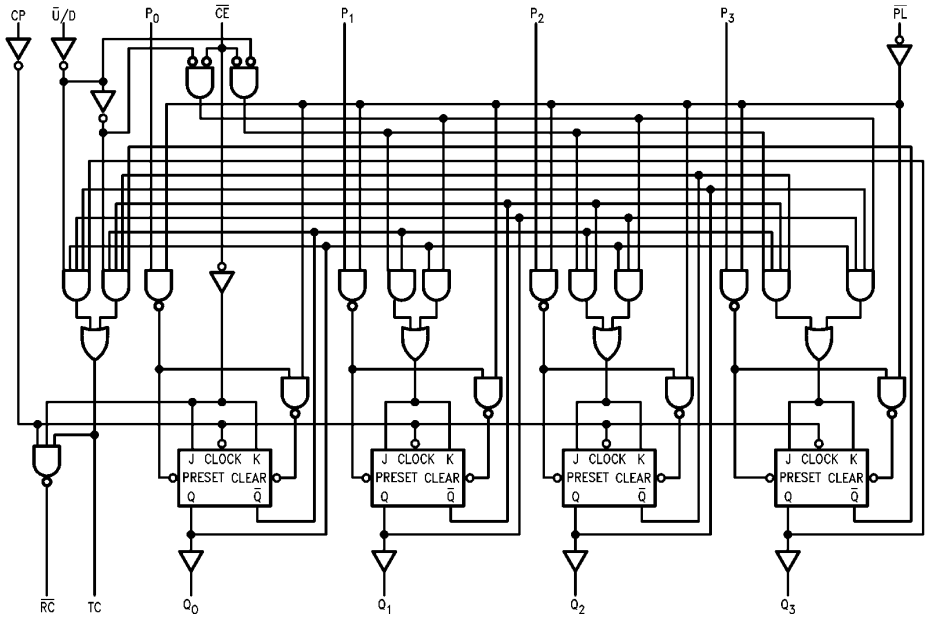

TL/F/9495–5

Please note that this diagram is provided only for the understanding of logic operations and should not be used to estimate propagation delays.

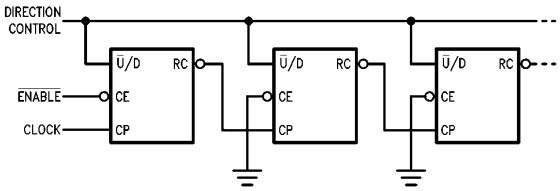

TL/F/9495–6

FIGURE 1. n-Stage Counter Using Ripple Clock

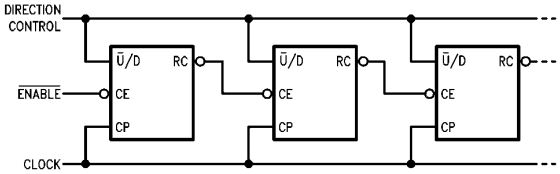

TL/F/9495–7

FIGURE 2. Synchronous n-Stage Counter Using Ripple Carry/Borrow

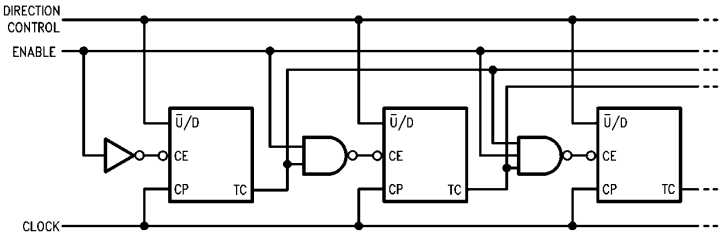

TL/F/9495–8

FIGURE 3. Synchronous n-Stage Counter with Gated Carry/Borrow

Absolute Maximum Ratings (Note 1)

If Military/Aerospace specified devices are required, please contact the National Semiconductor Sales Office/Distributors for availability and specifications.

Storage Temperature	−65°C to +150°C
Ambient Temperature under Bias	−55°C to +125°C
Junction Temperature under Bias	−55°C to +175°C
Plastic	−55°C to +150°C
V_{CC} Pin Potential to Ground Pin	−0.5V to +7.0V
Input Voltage (Note 2)	−0.5V to +7.0V
Input Current (Note 2)	−30 mA to +5.0 mA
Voltage Applied to Output in HIGH State (with V_{CC} = 0V)	
Standard Output	−0.5V to V_{CC}
TRI-STATE® Output	−0.5V to +5.5V
Current Applied to Output in LOW State (Max)	twice the rated I_{OL} (mA)

Note 1: Absolute maximum ratings are values beyond which the device may be damaged or have its useful life impaired. Functional operation under these conditions is not implied.

Note 2: Either voltage limit or current limit is sufficient to protect inputs.

Recommended Operating Conditions

Free Air Ambient Temperature	
Military	−55°C to +125°C
Commercial	0°C to +70°C
Supply Voltage	
Military	+4.5V to +5.5V
Commercial	+4.5V to +5.5V

DC Electrical Characteristics

Symbol	Parameter		54F/74F Min	54F/74F Typ	54F/74F Max	Units	V_{CC}	Conditions
V_{IH}	Input HIGH Voltage		2.0			V		Recognized as a HIGH Signal
V_{IL}	Input LOW Voltage				0.8	V		Recognized as a LOW Signal
V_{CD}	Input Clamp Diode Voltage				−1.2	V	Min	I_{IN} = −18 mA
V_{OH}	Output HIGH Voltage	54F 10% V_{CC}	2.5			V	Min	I_{OH} = −1 mA
		74F 10% V_{CC}	2.5					I_{OH} = −1 mA
		74F 5% V_{CC}	2.7					I_{OH} = −1 mA
V_{OL}	Output LOW Voltage	54F 10% V_{CC}			0.5	V	Min	I_{OL} = 20 mA
		74F 10% V_{CC}			0.5			I_{OL} = 20 mA
I_{IH}	Input HIGH Current	54F			20.0	μA	Max	V_{IN} = 2.7V
		74F			5.0			
I_{BVI}	Input HIGH Current Breakdown Test	54F			100	μA	Max	V_{IN} = 7.0V
		74F			7.0			
I_{CEX}	Output HIGH Leakage Current	54F			250	μA	Max	V_{OUT} = V_{CC}
		74F			50			
V_{ID}	Input Leakage Test	74F	4.75			V	0.0	I_{ID} = 1.9 μA, All Other Pins Grounded
I_{OD}	Output Leakage Circuit Current	74F			3.75	μA	0.0	V_{IOD} = 150 mV All Other Pins Grounded
I_{IL}	Input LOW Current				−0.6	mA	Max	V_{IN} = 0.5V (except $\overline{CE}$)
					−1.8			V_{IN} = 0.5V ($\overline{CE}$)
I_{OS}	Output Short-Circuit Current		−60		−150	mA	Max	V_{OUT} = 0V
I_{CC}	Power Supply Current			38	55	mA	Max	

AC Electrical Characteristics

Symbol	Parameter	74F			54F		74F		Units
		$T_A = +25°C$, $V_{CC} = +5.0V$, $C_L = 50$ pF			T_A, V_{CC} = Mil, $C_L = 50$ pF		T_A, V_{CC} = Com, $C_L = 50$ pF		
		Min	Typ	Max	Min	Max	Min	Max	
f_{max}	Maximum Count Frequency	100	125		75		90		MHz
t_{PLH}	Propagation Delay	3.0	5.5	7.5	3.0	9.5	3.0	8.5	ns
t_{PHL}	CP to Q_n	5.0	8.5	11.0	5.0	13.5	5.0	12.0	
t_{PLH}	Propagation Delay	6.0	10.0	13.0	6.0	16.5	6.0	14.0	
t_{PHL}	CP to TC	5.0	8.5	11.0	5.0	13.5	5.0	12.0	
t_{PLH}	Propagation Delay	3.0	5.5	7.5	3.0	9.5	3.0	8.5	ns
t_{PHL}	CP to $\overline{RC}$	3.0	5.0	7.0	3.0	9.0	3.0	8.0	
t_{PLH}	Propagation Delay	3.0	5.0	7.0	3.0	9.0	3.0	8.0	
t_{PHL}	$\overline{CE}$ to $\overline{RC}$	3.0	5.5	7.0	3.0	9.0	3.0	8.0	
t_{PLH}	Propagation Delay	7.0	11.0	18.0	7.0	22.0	7.0	20.0	ns
t_{PHL}	$\overline{U}$/D to $\overline{RC}$	5.5	9.0	12.0	5.5	14.0	5.5	13.0	
t_{PLH}	Propagation Delay	4.0	7.0	10.0	4.0	13.5	4.0	11.0	
t_{PHL}	$\overline{U}$/D to TC	4.0	6.5	10.0	4.0	12.5	4.0	11.0	
t_{PLH}	Propagation Delay	3.0	4.5	7.0	3.0	9.0	3.0	8.0	ns
t_{PHL}	P_n to Q_n	6.0	10.0	13.0	6.0	16.0	6.0	14.0	
t_{PLH}	Propagation Delay	5.0	8.5	11.0	5.0	13.0	5.0	12.0	ns
t_{PHL}	$\overline{PL}$ to Q_n	5.5	9.0	12.0	5.5	14.5	5.5	13.0	
t_{PLH}	Propagation Delay	5.0		14.0			5.0	15.0	ns
t_{PHL}	P_n to TC	6.5		13.0			6.0	14.0	
t_{PLH}	Propagation Delay	6.5		19.0			6.5	20.0	ns
t_{PHL}	P_n to $\overline{RC}$	6.0		14.0			6.0	15.0	
t_{PLH}	Propagation Delay	8.0		16.5			8.0	17.5	ns
t_{PHL}	$\overline{PL}$ to TC	6.0		13.5			6.0	14.5	
t_{PLH}	Propagation Delay	10.0		20.0			10.0	21.0	ns
t_{PHL}	$\overline{PL}$ to $\overline{RC}$	9.0		15.5			9.0	16.0	

AC Operating Requirements

Symbol	Parameter	74F $T_A = +25°C$ $V_{CC} = +5.0V$		54F T_A, V_{CC} = Mil		74F T_A, V_{CC} = Com		Units
		Min	Max	Min	Max	Min	Max	
$t_s(H)$ $t_s(L)$	Setup Time, HIGH or LOW P_n to $\overline{PL}$	4.5 4.5		6.0 6.0		5.0 5.0		ns
$t_h(H)$ $t_h(L)$	Hold Time, HIGH or LOW P_n to $\overline{PL}$	2.0 2.0		2.0 2.0		2.0 2.0		ns
$t_s(L)$	Setup Time LOW $\overline{CE}$ to CP	10.0		10.5		10.0		ns
$t_h(L)$	Hold Time LOW $\overline{CE}$ to CP	0		0		0		ns
$t_s(H)$ $t_s(L)$	Setup Time, HIGH or LOW $\overline{U}$/D to CP	12.0 12.0		12.0 12.0		12.0 12.0		ns
$t_h(H)$ $t_h(L)$	Hold Time, HIGH or LOW $\overline{U}$/D to CP	0 0		0 0		0 0		ns
$t_w(L)$	$\overline{PL}$ Pulse Width LOW	6.0		8.5		6.0		ns
$t_w(L)$	CP Pulse Width LOW	5.0		7.0		5.0		ns
t_{rec}	Recovery Time $\overline{PL}$ to CP	6.0		7.5		6.0		ns

Ordering Information

The device number is used to form part of a simplified purchasing code where the package type and temperature range are defined as follows:

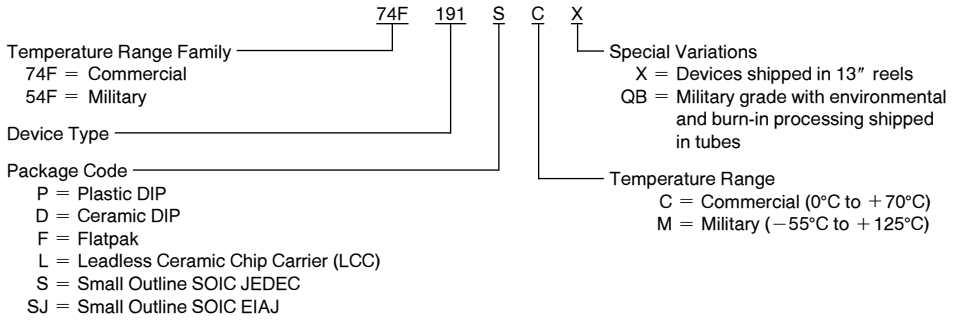

Physical Dimensions inches (millimeters)

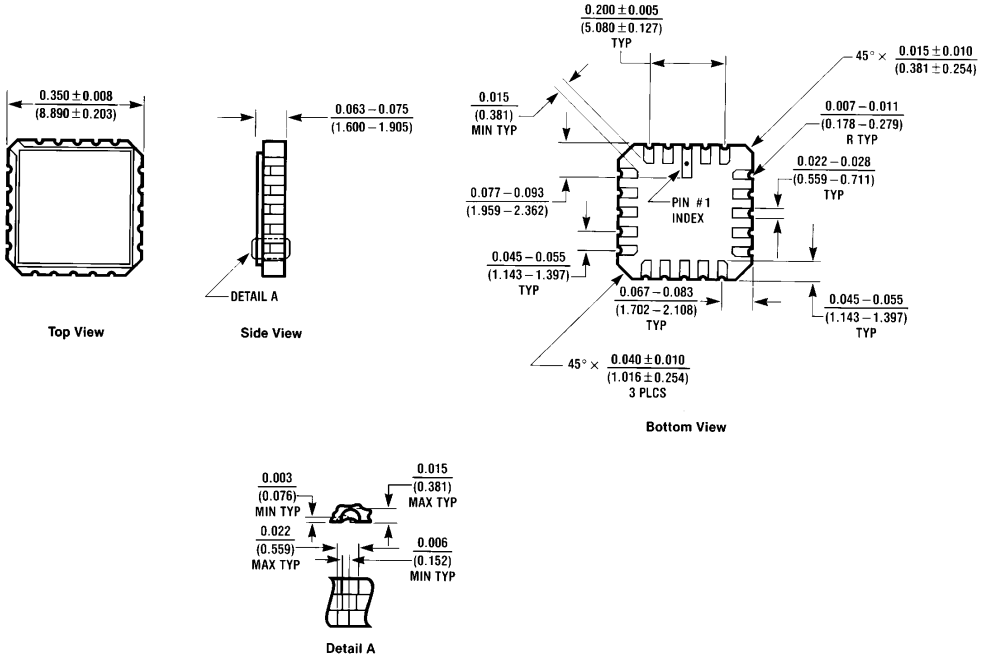

20-Lead Ceramic Leadless Chip Carrier (L)
NS Package Number E20A

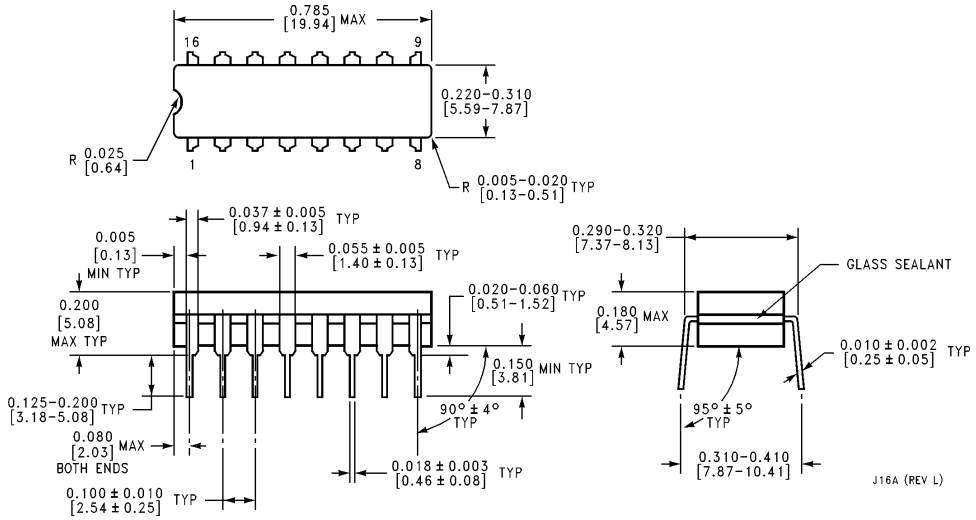

16-Lead Ceramic Dual-In-Line Package (D)
NS Package Number J16A

Physical Dimensions inches (millimeters) (Continued)

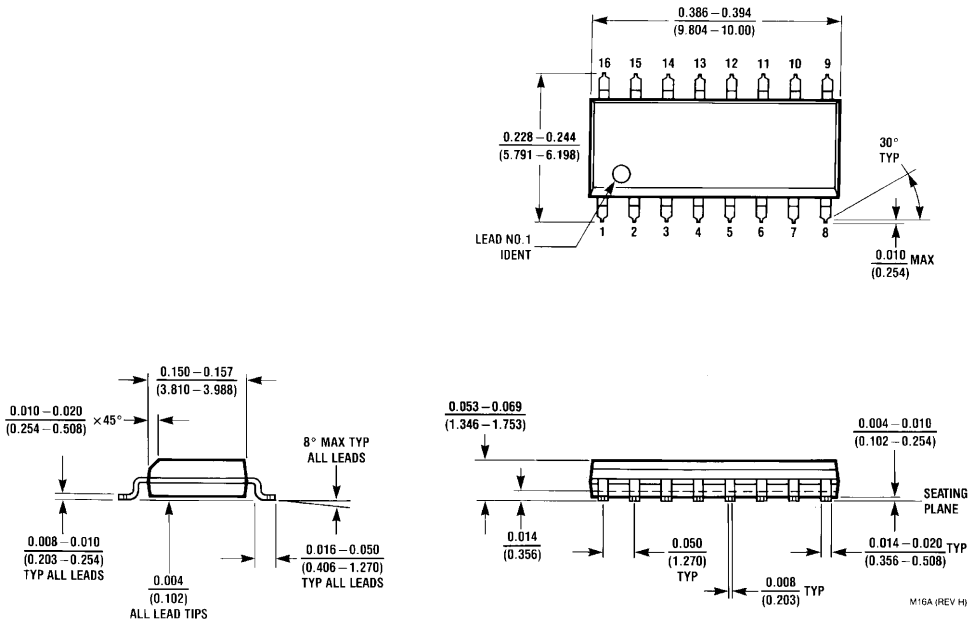

16-Lead (0.150″ Wide) Molded Small Outline Package, JEDEC (S)
NS Package Number M16A

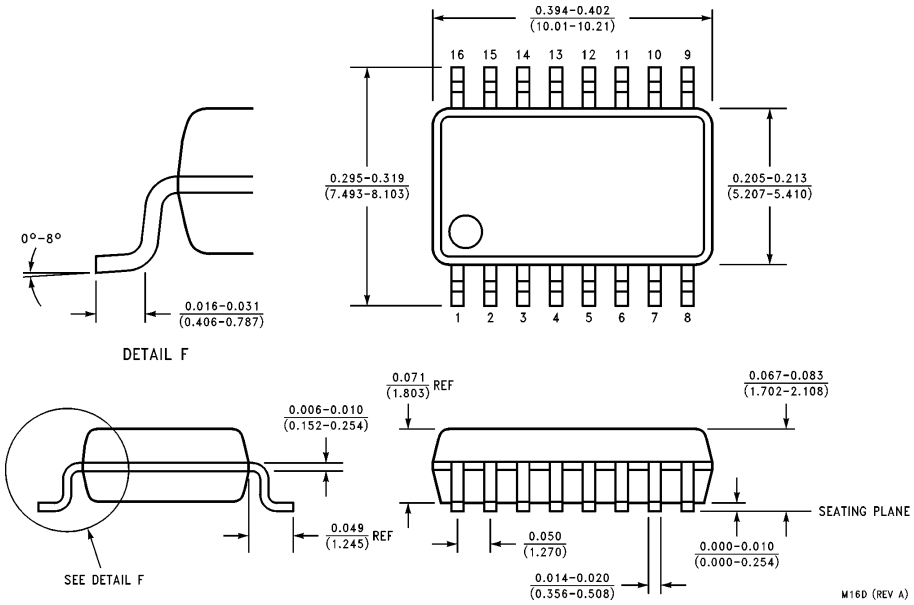

16-Lead (0.300″ Wide) Molded Small Outline Package, EIAJ (SJ)
NS Package Number M16D

Physical Dimensions inches (millimeters) (Continued)

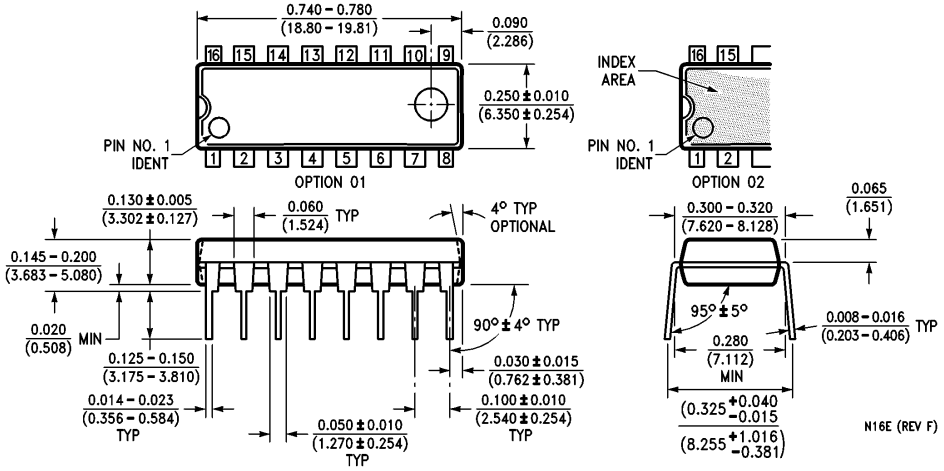

16-Lead (0.300″ Wide) Molded Dual-In-Line Package (P)
NS Package Number N16E

Physical Dimensions inches (millimeters) (Continued)

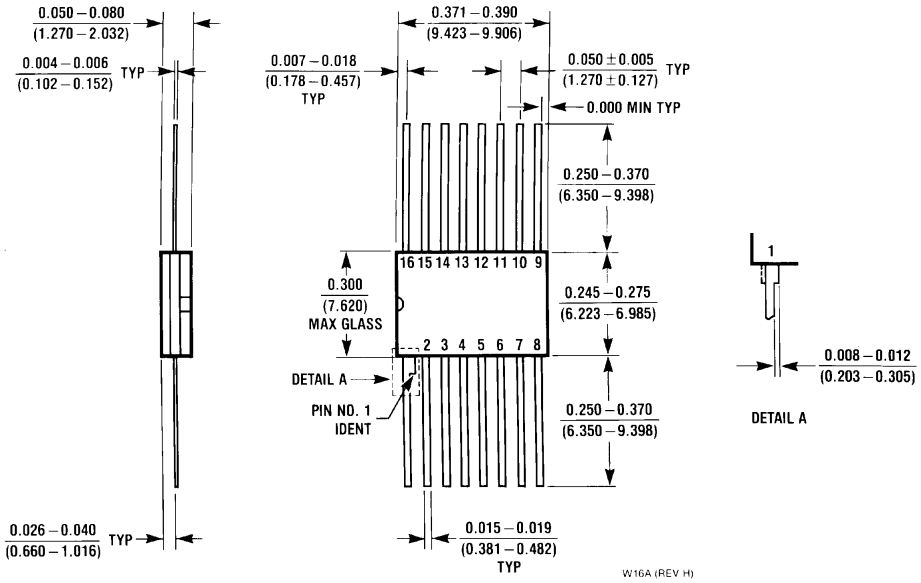

16-Lead Ceramic Flatpak (F)
NS Package Number W16A

LIFE SUPPORT POLICY

NATIONAL'S PRODUCTS ARE NOT AUTHORIZED FOR USE AS CRITICAL COMPONENTS IN LIFE SUPPORT DEVICES OR SYSTEMS WITHOUT THE EXPRESS WRITTEN APPROVAL OF THE PRESIDENT OF NATIONAL SEMICONDUCTOR CORPORATION. As used herein:

1. Life support devices or systems are devices or systems which, (a) are intended for surgical implant into the body, or (b) support or sustain life, and whose failure to perform, when properly used in accordance with instructions for use provided in the labeling, can be reasonably expected to result in a significant injury to the user.
2. A critical component is any component of a life support device or system whose failure to perform can be reasonably expected to cause the failure of the life support device or system, or to affect its safety or effectiveness.

National Semiconductor Corporation
2900 Semiconductor Drive
P.O. Box 58090
Santa Clara, CA 95052-8090
Tel: 1(800) 272-9959
TWX: (910) 339-9240

National Semiconductor GmbH
Livry-Gargan-Str. 10
D-82256 Fürstenfeldbruck
Germany
Tel: (81-41) 35-0
Telex: 527649
Fax: (81-41) 35-1

National Semiconductor Japan Ltd.
Sumitomo Chemical
Engineering Center
Bldg. 7F
1-7-1, Nakase, Mihama-Ku
Chiba-City,
Ciba Prefecture 261
Tel: (043) 299-2300
Fax: (043) 299-2500

National Semiconductor Hong Kong Ltd.
13th Floor, Straight Block,
Ocean Centre, 5 Canton Rd.
Tsimshatsui, Kowloon
Hong Kong
Tel: (852) 2737-1600
Fax: (852) 2736-9960

National Semiconductores Do Brazil Ltda.
Rue Deputado Lacorda Franco
120-3A
Sao Paulo-SP
Brazil 05418-000
Tel: (55-11) 212-5066
Telex: 391-1131931 NSBR BR
Fax: (55-11) 212-1181

National Semiconductor (Australia) Pty, Ltd.
Building 16
Business Park Drive
Monash Business Park
Nottinghill, Melbourne
Victoria 3168 Australia
Tel: (3) 558-9999
Fax: (3) 558-9998

National does not assume any responsibility for use of any circuitry described, no circuit patent licenses are implied and National reserves the right at any time without notice to change said circuitry and specifications.

Компания «ЭлектроПласт» предлагает заключение долгосрочных отношений при поставках импортных электронных компонентов на взаимовыгодных условиях!

Наши преимущества:

- Оперативные поставки широкого спектра электронных компонентов отечественного и импортного производства напрямую от производителей и с крупнейших мировых складов;
- Поставка более 17-ти миллионов наименований электронных компонентов;
- Поставка сложных, дефицитных, либо снятых с производства позиций;
- Оперативные сроки поставки под заказ (от 5 рабочих дней);
- Экспресс доставка в любую точку России;
- Техническая поддержка проекта, помощь в подборе аналогов, поставка прототипов;
- Система менеджмента качества сертифицирована по Международному стандарту ISO 9001;
- Лицензия ФСБ на осуществление работ с использованием сведений, составляющих государственную тайну;
- Поставка специализированных компонентов (Xilinx, Altera, Analog Devices, Intersil, Interpoint, Microsemi, Aeroflex, Peregrine, Syfer, Eurofarad, Texas Instrument, Miteq, Cobham, E2V, MA-COM, Hittite, Mini-Circuits,General Dynamics и др.);

Помимо этого, одним из направлений компании «ЭлектроПласт» является направление «Источники питания». Мы предлагаем Вам помощь Конструкторского отдела:

- Подбор оптимального решения, техническое обоснование при выборе компонента;
- Подбор аналогов;
- Консультации по применению компонента;
- Поставка образцов и прототипов;
- Техническая поддержка проекта;
- Защита от снятия компонента с производства.

Как с нами связаться

Телефон: 8 (812) 309 58 32 (многоканальный)
Факс: 8 (812) 320-02-42
Электронная почта: org@eplast1.ru
Адрес: 198099, г. Санкт-Петербург, ул. Калинина, дом 2, корпус 4, литера А.