PLL500-27B/-37B/-47B

Low Power CMOS Output VCXO Family (27MHz to 200MHz)

FEATURES

- VCXO output for the 27MHz to 200MHz range
  - PLL500-27: 27MHz to 65MHz
  - PLL500-37: 65MHz to 130MHz
  - PLL500-47: 100MHz to 200MHz
- Low phase noise (-130 dBc @ 10kHz offset).
- CMOS output with OE tri-state control.
- Selectable output drive (Standard or High drive).
  - Standard: 12mA drive capability at TTL level.
  - High: 36mA drive capability at TTL level.
- Fundamental crystal input.
- Integrated high linearity variable capacitors.
- +/- 150 ppm pull range, max 5% linearity.
- Low jitter (RMS): 2.5ps period jitter.
- 2.5-3.3V operation.
- Available in 8-Pin SOIC or DIE.

DESCRIPTION

The PLL500-27/-37/-47 are a low cost, high performance, low phase noise, and high linearity VCXO family for the 27 to 200MHz range, providing less than -130dBc at 10kHz offset. The very low jitter (2.5 ps RMS period jitter) makes these chips ideal for applications requiring voltage controlled frequency sources. The IC's are designed to accept fundamental resonant mode crystals.

PIN CONFIGURATION

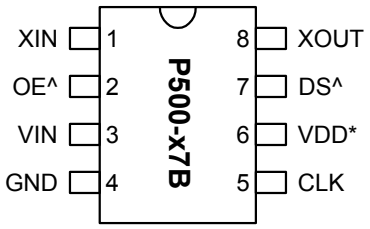

^: Denotes internal Pull-up

DIE PAD LAYOUT

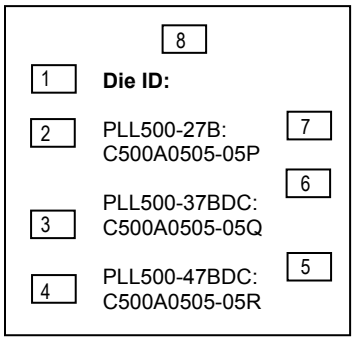

FREQUENCY RANGE

PART #	MULTIPLIER	FREQUENCY
PLL500-27B	No PLL	27 – 65 MHz
PLL500-37B	No PLL	65 – 130 MHz
PLL500-47B	No PLL	100 – 200 MHz

BLOCK DIAGRAM

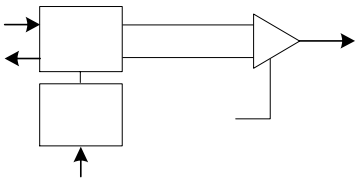

PIN AND PAD DESCRIPTION

Name	Pin#	Die Pad Position		Type	Description
		X (μm)	Y (μm)		
XIN	1	94.183	768.599	I	Crystal input pin.
OE	2	94.157	605.029	I	Output Enable input pin. Disables the output when low. Internal pull-up enables output by default if pin is not connected low.
VCON	3	94.183	331.756	I	Frequency control voltage input pin.
GND	4	94.193	140.379	P	Ground pin.
CLK	5	715.472	203.866	O	Output clock pin.
VDD	6	715.307	455.726	P	VDD power supply pin.
DRIVSEL	7	715.472	626.716	I	Output drive select pin. High drive if set to '0'. Low drive if set to '1'. Internal pull-up.
XOUT	8	476.906	888.881	I	Crystal output pin. Ref clock input.

ELECTRICAL SPECIFICATIONS

1. Absolute Maximum Ratings

PARAMETERS	SYMBOL	MIN.	MAX.	UNITS
Supply Voltage Range	V_{CC}	-0.5	4.6	V
Input Voltage Range	V_I	-0.5	V_{CC}+0.5	V
Output Voltage Range	V_O	-0.5	V_{CC}+0.5	V
Soldering Temperature			240	°C
Storage Temperature	T_S	-65	150	°C
Ambient Operating Temperature		-40	+85	°C

Exposure of the device under conditions beyond the limits specified by Maximum Ratings for extended periods may cause permanent damage to the device and affect product reliability. These conditions represent a stress rating only, and functional operations of the device at these or any other conditions above the operational limits noted in this specification is not implied.

2. AC Electrical Specifications

PARAMETERS	SYMBOL	CONDITIONS	MIN.	TYP.	MAX.	UNITS
Input Crystal Frequency		PLL500-27	27		65	MHz
		PLL500-37	65		130	
		PLL500-47	100		200	
Output Clock Rise/Fall Time		0.8V ~ 2.0V with 10 pF load		1.15		ns
		0.3V ~ 3.0V with 15 pF load		3.7		
Output Clock Duty Cycle		Measured @ 1.4V	45	50	55	%
Short Circuit Current				±50		mA

3. Voltage Control Crystal Oscillator

PARAMETERS	SYMBOL	CONDITIONS	MIN.	TYP.	MAX.	UNITS
VCXO Stabilization Time *	$T_{VCXOSTB}$	From power valid		10		ms
VCXO Tuning Range		XTAL C_0/C_1 < 250	300			ppm
CLK output pullability		0V ≤ VCON ≤ 3.3V	±150			ppm
VCXO Tuning Characteristic				100		ppm/V
Pull range linearity					5	%
Power Supply Rejection	PWSRR	Frequency change with VDD varied +/- 10%	-1		+1	ppm
VCON pin input impedance			2000			kΩ
VCON modulation BW		0V ≤ VCON ≤ 3.3V, -3dB	45			kHz

Note: Preliminary Specifications still to be characterized. Parameters denoted with an asterisk (*) represent nominal characterization data and are not production tested to any specific limits.

4. Jitter and Phase Noise specification

PARAMETERS	CONDITIONS	MIN.	TYP.	MAX.	UNITS
RMS Period Jitter (1 sigma – 1000 samples)	With capacitive decoupling between VDD and GND.		2.5		ps
Phase Noise relative to carrier	@100Hz offset		-80		dBc/Hz
Phase Noise relative to carrier	@1kHz offset		-110		dBc/Hz
Phase Noise relative to carrier	@10kHz offset		-130		dBc/Hz
Phase Noise relative to carrier	@100kHz offset		-138		dBc/Hz
Phase Noise relative to carrier	@1MHz offset		-145		dBc/Hz

5. DC Specification

PARAMETERS	SYMBOL	CONDITIONS	MIN.	TYP.	MAX.	UNITS
Supply Current, Dynamic, with Loaded Outputs	I_{DD}	F_{XIN} = 36MHz, 15pF output load		5	6	mA
		F_{XIN} = 77MHz, 15pF output load		10	12	
		F_{XIN} = 155MHz, 15pF output load		15	18	
Allowable output load capacitance	C_L (Output)	PLL500-27			N/A	pF
		PLL500-37 and-47: Std drive			15	pF
		PLL500-37 and-47: High drive			10	pF
Operating Voltage	V_{DD}		2.25		3.63	V
Output High Voltage	V_{OH}	I_{OH} = -12mA	2.4			V
Output Low Voltage	V_{OL}	I_{OL} = 12mA			0.4	V
Output High Voltage at CMOS level		I_{OH} = -4mA	V_{DD} – 0.4			V
Output drive current		Standard drive at TTL level	12	17		mA
		High drive at TTL level	36	51		
Short Circuit Current				±50		mA
VCXO Control Voltage	VCON		0		3.3	V
ESD Protection		Human Body Model	2000			V

6. Crystal Specifications

PARAMETERS	SYMBOL	MIN.	TYP.	MAX.	UNITS
Crystal Loading Rating (VCON = 1.65V)	$C_{L\ (xtal)}$		8.5		pF
Maximum Sustainable Drive Level				200	μW
Operating Drive Level			50		μW
Max C0 for PLL500-27				3.5	pF
Max C0 for PLL500-37				2.5	
Max C0 for PLL500-47				2	
C0/C1				250	-
ESR	R_S			30	Ω

Note: The crystal must be such that it oscillates (parallel resonant) at nominal frequency when presented a C Load as specified above.
If the crystal requires more load to be at nominal frequency, the additional load must be added externally.
This however may reduce the pull range.

PACKAGE INFORMATION

8 PIN (dimensions in mm)

	Narrow SOIC	
Symbol	Min.	Max.
A	1.47	1.73
A1	0.10	0.25
B	0.33	0.51
C	0.19	0.25
D	4.80	4.95
E	3.80	4.00
H	5.80	6.20
L	0.38	1.27
e	1.27 BSC	

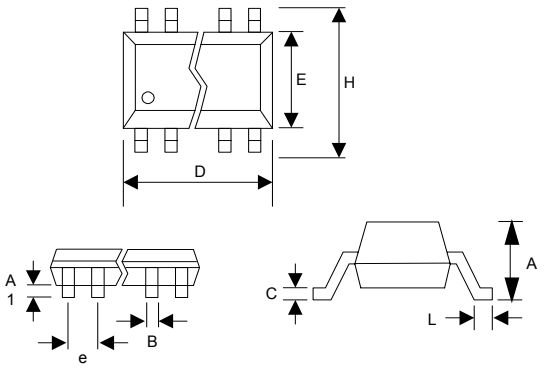

ORDERING INFORMATION

PART NUMBER

The order number for this device is a combination of the following:
Device number, Package type and Operating temperature range

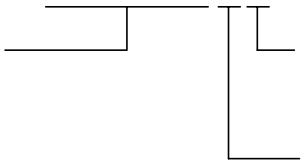

Order Number	Marking	Package Option
PLL500-27BSC	P500-27B SC	8-Pin SOIC (Tube)
PLL500-27BSC-R	P500-27B SC	8-Pin SOIC (Tape and Reel)
PLL500-27BDC	P500-27B DC	Die (Waffle Pack)
PLL500-37BSC	P500-37B SC	8-Pin SOIC (Tube)
PLL500-37BSC-R	P500-37B SC	8-Pin SOIC (Tape and Reel)
PLL500-37BDC	P500-37B DC	Die (Waffle Pack)
PLL500-47BSC	P500-47B SC	8-Pin SOIC (Tube)
PLL500-47BSC-R	P500-47B SC	8-Pin SOIC (Tape and Reel)
PLL500-47BDC	P500-47B DC	Die (Waffle Pack)

PhaseLink Corporation, reserves the right to make changes in its products or specifications, or both at any time without notice. The information furnished by Phaselink is believed to be accurate and reliable. However, PhaseLink makes no guarantee or warranty concerning the accuracy of said information and shall not be responsible for any loss or damage of whatever nature resulting from the use of, or reliance upon this product.

LIFE SUPPORT POLICY: PhaseLink's products are not authorized for use as critical components in life support devices or systems without the express written approval of the President of PhaseLink Corporation.

Компания «ЭлектроПласт» предлагает заключение долгосрочных отношений при поставках импортных электронных компонентов на взаимовыгодных условиях!

Наши преимущества:

- Оперативные поставки широкого спектра электронных компонентов отечественного и импортного производства напрямую от производителей и с крупнейших мировых складов;
- Поставка более 17-ти миллионов наименований электронных компонентов;
- Поставка сложных, дефицитных, либо снятых с производства позиций;
- Оперативные сроки поставки под заказ (от 5 рабочих дней);
- Экспресс доставка в любую точку России;
- Техническая поддержка проекта, помощь в подборе аналогов, поставка прототипов;
- Система менеджмента качества сертифицирована по Международному стандарту ISO 9001;
- Лицензия ФСБ на осуществление работ с использованием сведений, составляющих государственную тайну;
- Поставка специализированных компонентов (Xilinx, Altera, Analog Devices, Intersil, Interpoint, Microsemi, Aeroflex, Peregrine, Syfer, Eurofarad, Texas Instrument, Miteq, Cobham, E2V, MA-COM, Hittite, Mini-Circuits,General Dynamics и др.);

Помимо этого, одним из направлений компании «ЭлектроПласт» является направление «Источники питания». Мы предлагаем Вам помощь Конструкторского отдела:

- Подбор оптимального решения, техническое обоснование при выборе компонента;
- Подбор аналогов;
- Консультации по применению компонента;
- Поставка образцов и прототипов;
- Техническая поддержка проекта;
- Защита от снятия компонента с производства.

Как с нами связаться

Телефон: 8 (812) 309 58 32 (многоканальный)
Факс: 8 (812) 320-02-42
Электронная почта: org@eplast1.ru
Адрес: 198099, г. Санкт-Петербург, ул. Калинина, дом 2, корпус 4, литера А.