MP-2016-2100
Mid Power LED - Preliminary

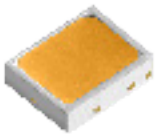

Table of Contents

Technology Overview 2
Product Selection Table 3
Product Ordering Info.. 4
Operation Characteristics. . .5
Color Bins. 6
Chromaticity Coordinate . . .7
Characteristics Graphs. 8
Package dimension 10
Soldering Pad Pattern 10
Tape Dimensions. 11
Reel Dimensions 12
Box Packaging 13
Storage Condition 14

Features:

- High efficacy
- CRI Options: Minimum 70, 80, 90
- Low thermal resistance
- Compatible with automatic placement equipment
- Compatible with infrared reflow solder process
- RoHs compatible
- RoHs and REACH compliant

Applications

- Linear fluorescent
- A- lamps
- Panel lighting
- Down lights
- Architectural lighting

PDS-002811 Rev 03 © 2018 Luminus Devices, Inc. - All Rights Reserved

Technology Overview

Luminus mid power LEDs are lighting class solutions designed for high performance general lighting applications. These state-of-the-art LEDs allow illumination engineers and designers to develop lighting solutions with maximum efficacy, brightness and overall quality.

Reliability

Luminus mid power LED is one of the most reliable light sources in the world today. Having passed a rigorous suite of environmental and mechanical stress tests, including mechanical shock, vibration, temperature cycling and humidity, it is fully qualified for use in a wide range of high performance and high efficacy lighting applications.

REACH & RoHS Compliance

The Luminus 2016 mid power LED is compliant to the Restriction of Hazardous Substances Directive or RoHS. The restricted materials including lead, mercury cadmium, hexavalent chromium, polybrominated biphenyls (PBB) and polybrominated diphenyl ether (PBDE) are not used.

Understanding Luminus Mid Power LED Test Specifications

Every Luminus LED is fully tested to ensure it meets the high quality standards customers have come to expect from Luminus products.

Testing Temperature

Luminus Mid Power products are measured at a case temperature of 25°C and placed into intensity, chromaticity and voltage bins as described herein

PDS-002811 Rev 03 © 2018 Luminus Devices, Inc. - All Rights Reserved

Product Selection Table

Test condition = 60 mA, T_c=25 °C

Nominal CCT	Minimum CRI	Ordering Part Number	Minimum Flux (Lumens)	Typical Flux (Lumens)
2200K	80	MP-2016-2100-22-80	38	42
2700K	80	MP-2016-2100-27-80	46	50
	90	MP-2016-2100-27-90	38	42
3000K	80	MP-2016-2100-30-80	46	52
	90	MP-2016-2100-30-90	42	44
3500K	80	MP-2016-2100-35-80	46	53
	90	MP-2016-2100-35-90	42	45
4000K	70	MP-2016-2100-40-70	50	59
	80	MP-2016-2100-40-80	50	55
	90	MP-2016-2100-40-90	42	46
5000K	70	MP-2016-2100-50-70	50	59
	80	MP-2016-2100-50-80	50	55
	90	MP-2016-2100-50-90	42	46
5700K	70	MP-2016-2100-57-70	50	59
	80	MP-2016-2100-57-80	50	55
6500K	70	MP-2016-2100-65-70	50	59
	80	MP-2016-2100-65-80	50	55

**Tolerance of measurements of the luminous flux is ±7%*

** Tolerance of measurements of the CRI is ±2*

**IFP condition with Pulse: Width ≤100µs Duty cycle ≤1/10*

PDS-002811 Rev 03 © 2018 Luminus Devices, Inc. - All Rights Reserved

Product Ordering and Shipping Part Number Nomenclature

All mid power products are packaged and labeled with part numbers as outlined in below. When shipped, each reel will contain only a single flux and voltage bin. The part number designation is as follows:

2016 Mid Power LEDs

Mid Power	Package Type	Package Configurator	Nominal CCT	Minimum CRI
MP	2016	2100	##	##

Example :

The part number MP-2016-2100-30-80 refers to a 2016 mid power emitter with nominal color tempecture of 3,000k and minimum CRI of 80. Please refer to page 5 for a description of available CCT and CRI combinations.

Note 1: CCT Codes:
27 = 2700 k
30= 3000 k
35= 3500 k
40 = 4000 k
50 = 5000 k
57= 5700 k
65 = 6500 k

Note 2: CRI Codes:
70
80
90

Each mid power product shipped will be labeled with its specific flux and voltage bins. Not all bins listed are available in all CCTs and CRIs.

Luminus Flux Bins

Bin Code	Minimum Flux (Lumens)	Maximum Flux (Lumens)
E2	36	38
E3	38	42
E4	42	46
E5	46	50
E6	50	54
E7	54	58
E8	58	62
E9	62	66

Forward Voltage Bins (T_c=25°C)

Bin Code	Minimum Voltage (Volts)	Maximum Voltage (Volts)
D	5.8	6.1
E	6.1	6.4

** Tolerance of measurements f the Forward Voltage is ±0.08V*

PDS-002811 Rev 03 © 2018 Luminus Devices, Inc. - All Rights Reserved

2016 Mid Power Operating Characteristics

Optical and Electrical Characteristics(T_c=25ºC)

Parameter	Symbol	Minimum	Typical	Maximum	Unit	Condition
Forward Voltage	V_f	5.8	6.1	6.4	V	I_f=60mA
Reverse Current	I_r			10	uA	V_r=5V
View Angle	$2\theta^{1/2}$		110		º	I_f=60mA
Thermal Resistance	Rth_{j-sp}		27		ºC/W	I_f=60mA
Electrostatic Discharge	ESD	1000			V	

Note 1: To prevent damage refer to operating conditions and derating curves for appropriate maximum operating conditions

Note 2: Maximum operating case temperature combined with maximum drive current defines the total maximum operating condition for the device. To prevent damage, please follow derating curves for all operating conditions.

Note 3: Mid power LEDs are designed for operation up to an absolute maximum forward drive current as specified above. Product lifetime data is specified at typical forward drive currents. Sustained operation at absolute maximum currents will result in a reduction of device lifetime compared to typical forward drive currents. Actual device lifetimes will also depend on case temperature. Refer to the current vs. case temperature derating curves for further information.

Note 4: Caution must be taken not to stare at the light emitted from these LEDs. Under special circumstances, the high intensity could damage the eye.

Absolute Maximum Ratings (T_c=25ºC)

Parameter	Symbol	Rating	Unit
Forward Current	I_f	120	mA
Pulse Forward Current	I_{fp}	200	mA
Power Dissipation	P_d	768	mW
Reverse Voltage	V_r	5	V
Operating Temperature	T_{opr}	-40~+85	°C
Storage Temperature	T_{stg}	-40~+85	°C
Junction Temperature	T_j	125	°C
Soldering Temperature	T_{sld}	230 °C or 260 °C for 10 sec	

**IFP condition with Pulse: Width ≤100μs Duty cycle ≤1/10*

PDS-002811 Rev 03 © 2018 Luminus Devices, Inc. - All Rights Reserved

Color Bins

Color Code	Center		Radius		Angle(deg)
	x	y	a	b	ϕ
22M5	0.5065	0.4171	0.012500	0.00700	53.00
27M5	0.4582	0.4099	0.013500	0.007000	53.42
30M5	0.4342	0.4028	0.013900	0.006800	53.13
35M5	0.4080	0.3916	0.015450	0.006900	54.00
40M5	0.3825	0.3798	0.015650	0.006700	53.43
50M5	0.3451	0.3554	0.013700	0.005900	59.37
57M5	0.3290	0.3417	0.011175	0.005500	58.35
65M5	0.3130	0.3290	0.011150	0.004750	58.34

Ellipse Definition

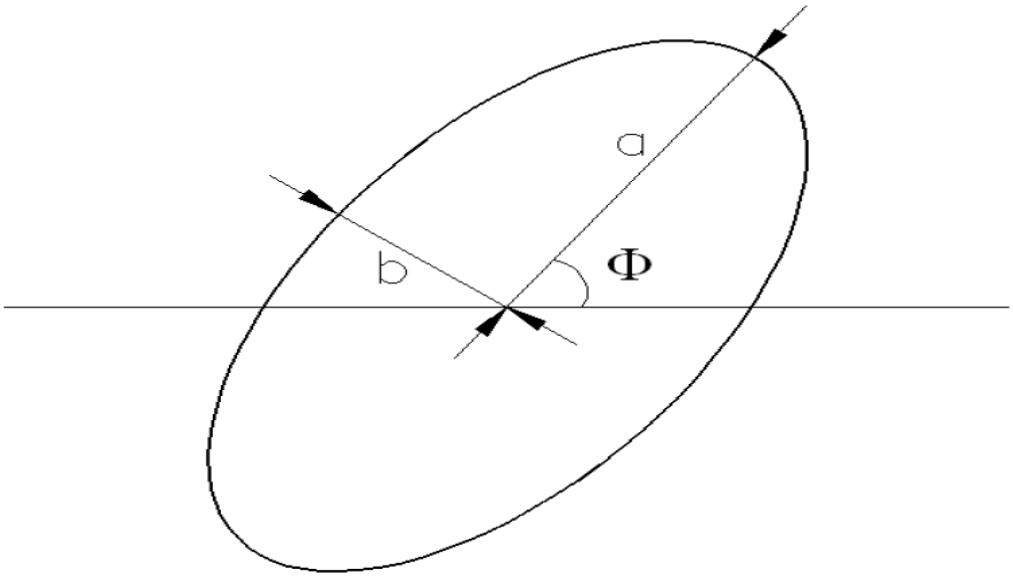

*Note: Tolerance of measurements of the chromaticity Coordinate is ±0.005
Chromaticity coordinates as per ANSI standard.

 © 2018 Luminus Devices, Inc. - All Rights Reserved

Chromaticity Coordinate Group

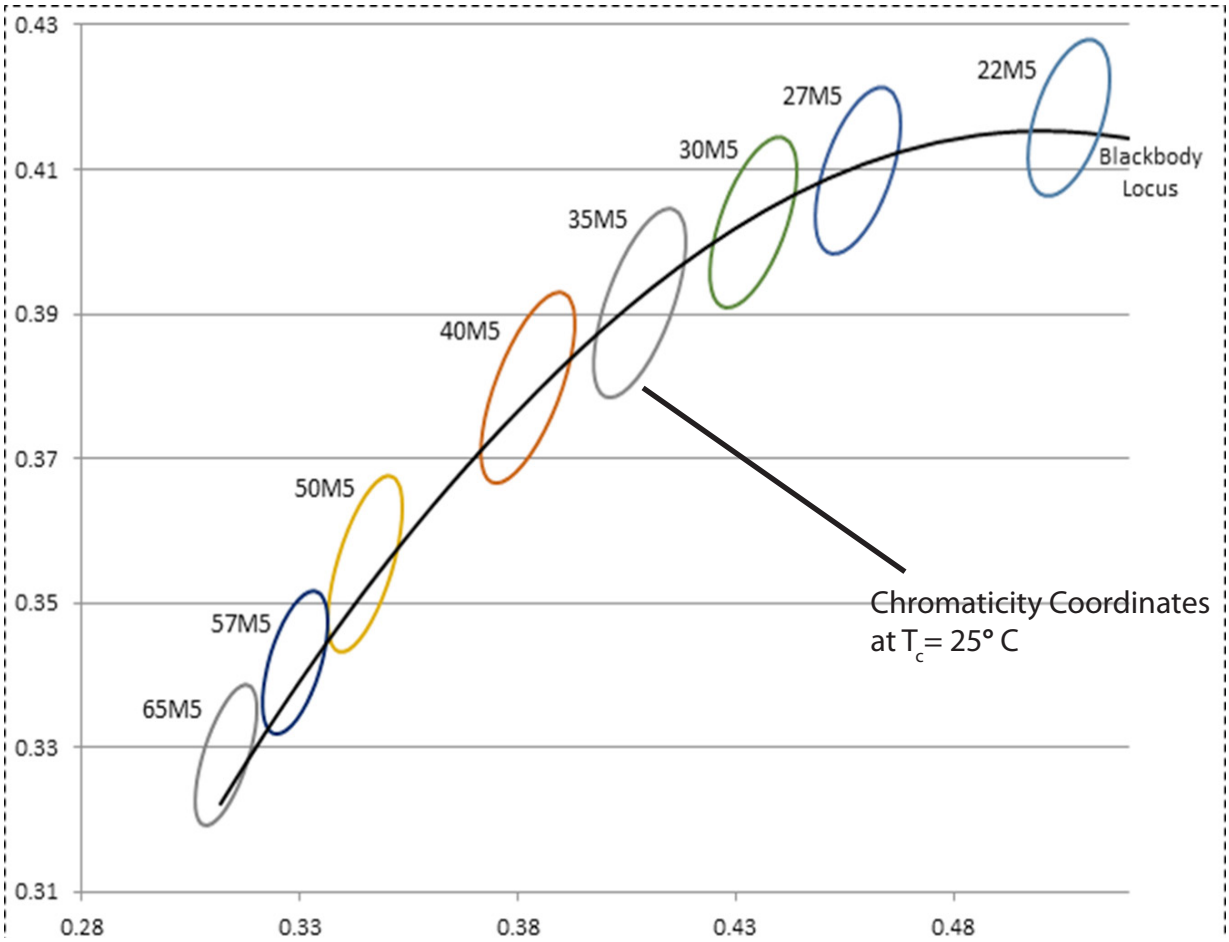

 © 2018 Luminus Devices, Inc. - All Rights Reserved

Typical optical/Electrical Characteristics Graphs

V_f-------I_f

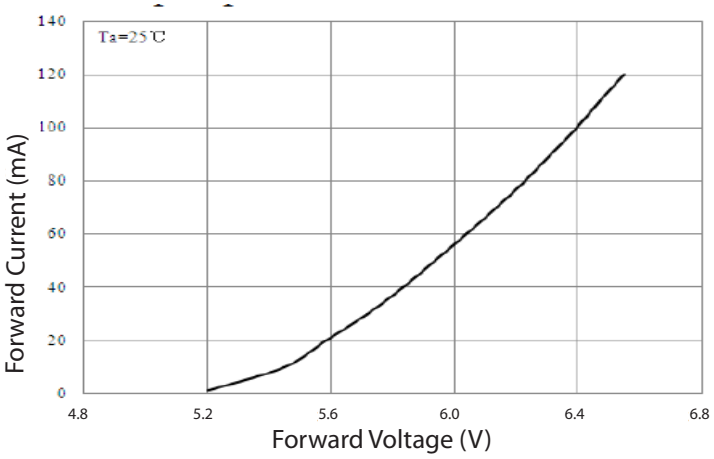

I_f---- Relative Luminous flux

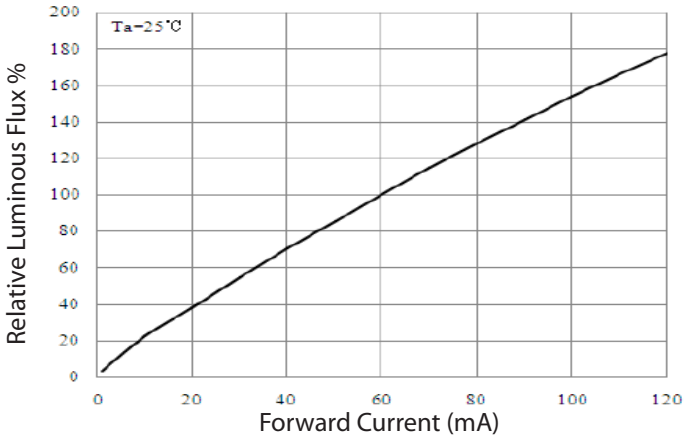

T_c-----Relative Luminous Flux

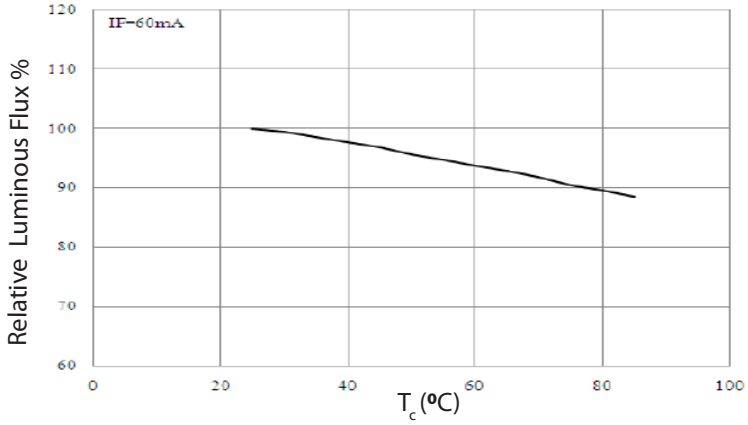

Wavelength- Relative Emission Intensity

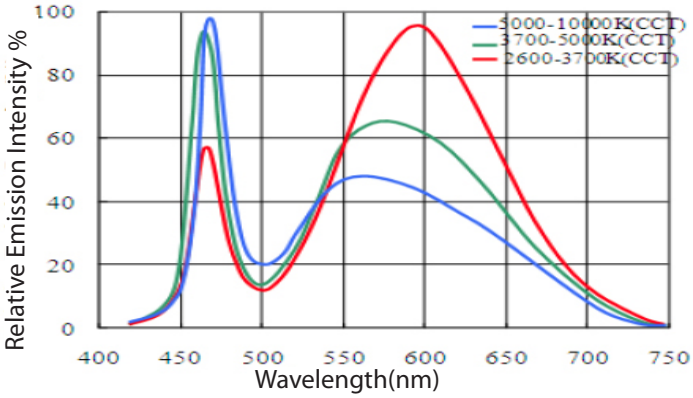

PDS-002811 Rev 03 © 2018 Luminus Devices, Inc. - All Rights Reserved

Typical Optical/Electrical Characteristics

Typical Polar Radiation Pattern

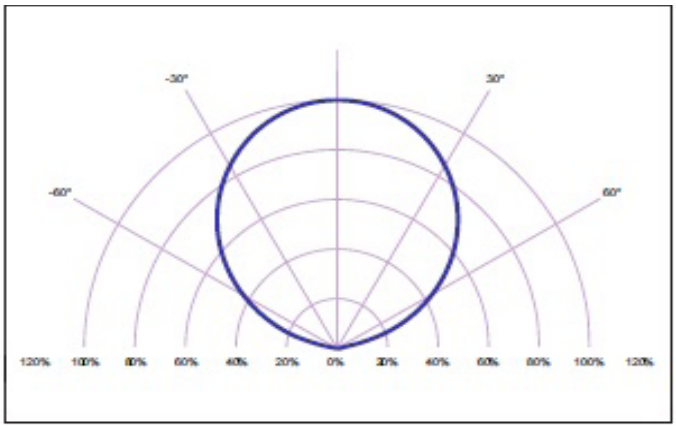

Ambient Temperature-Allowable Forward Current

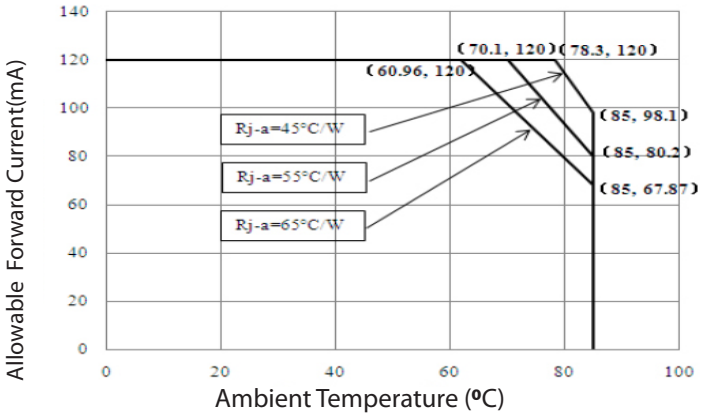

T_c--Forward Voltage

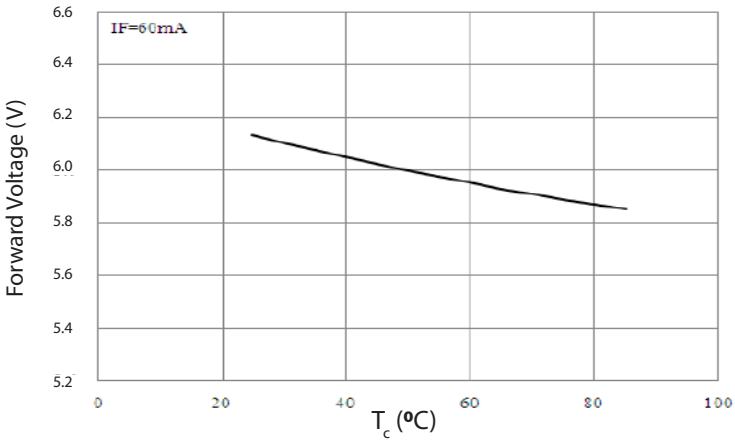

Forward Current --Chromaticity Coordinate

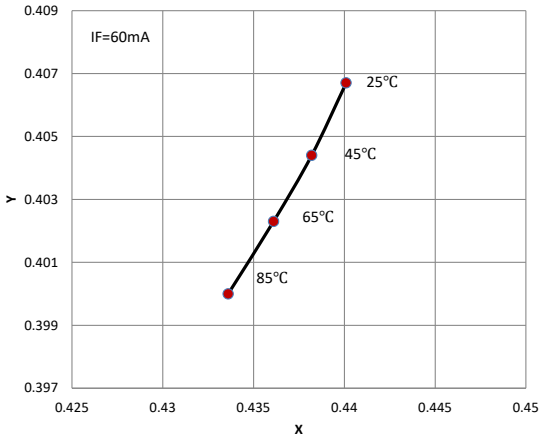

PDS-002811 Rev 03 © 2018 Luminus Devices, Inc. - All Rights Reserved

Package Dimension (mm)

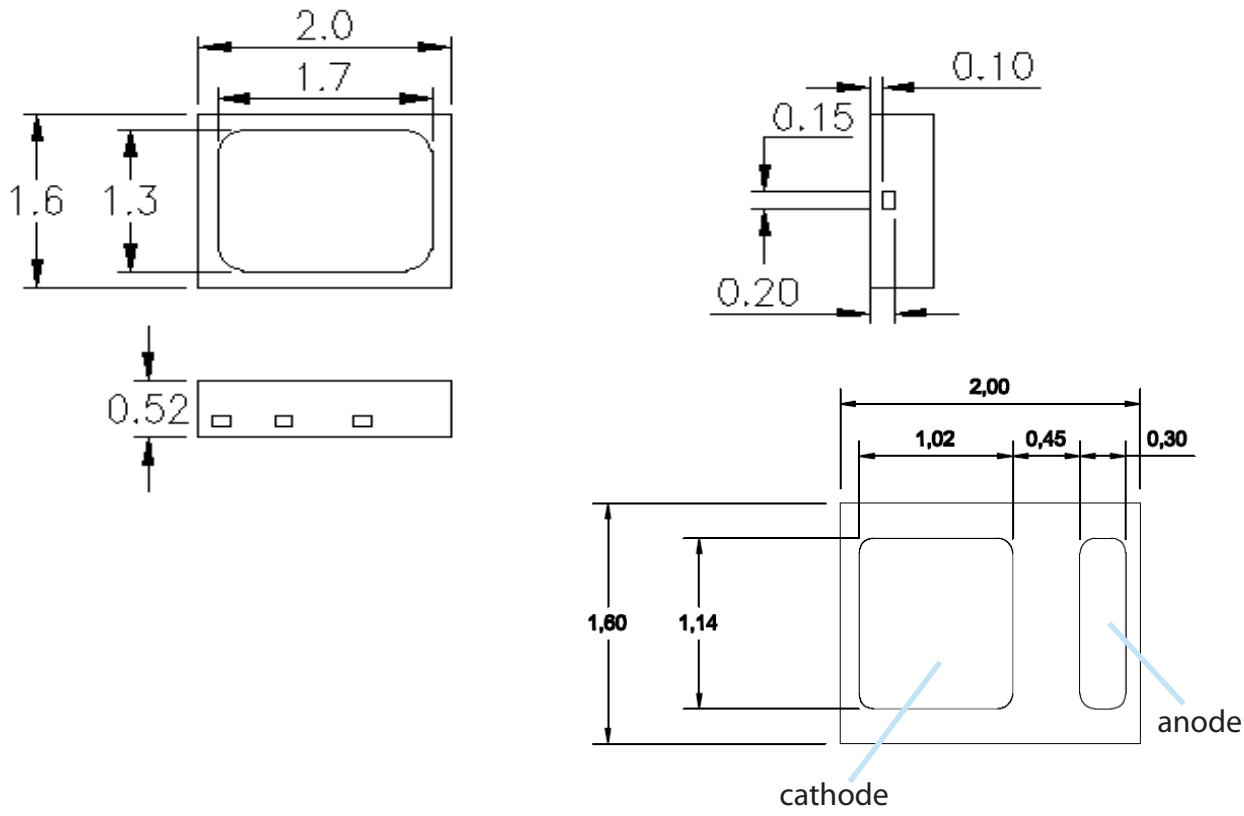

Recommended Soldering Pad Pattern and Stencil

Soldering Pad Pattern

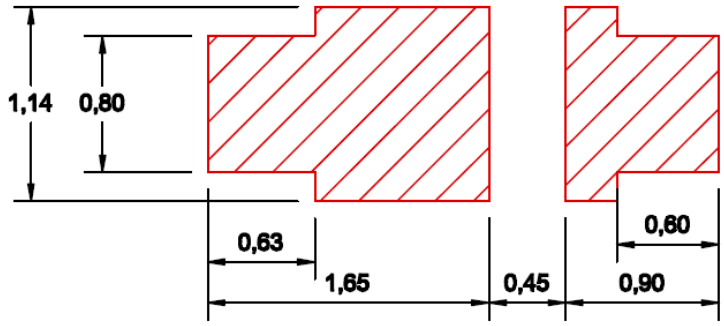

Stencil

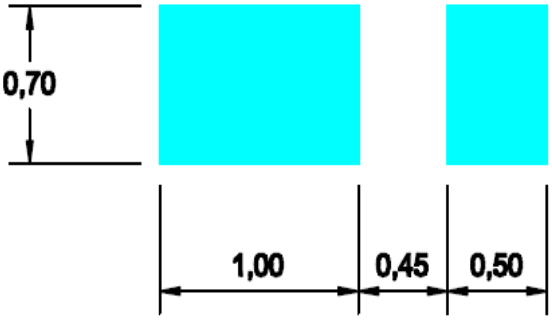

Note: tolerance : .X: ±0.10mm .XX: ±0.05mm

 © 2018 Luminus Devices, Inc. - All Rights Reserved

Package Dimensions Of Tape(mm)

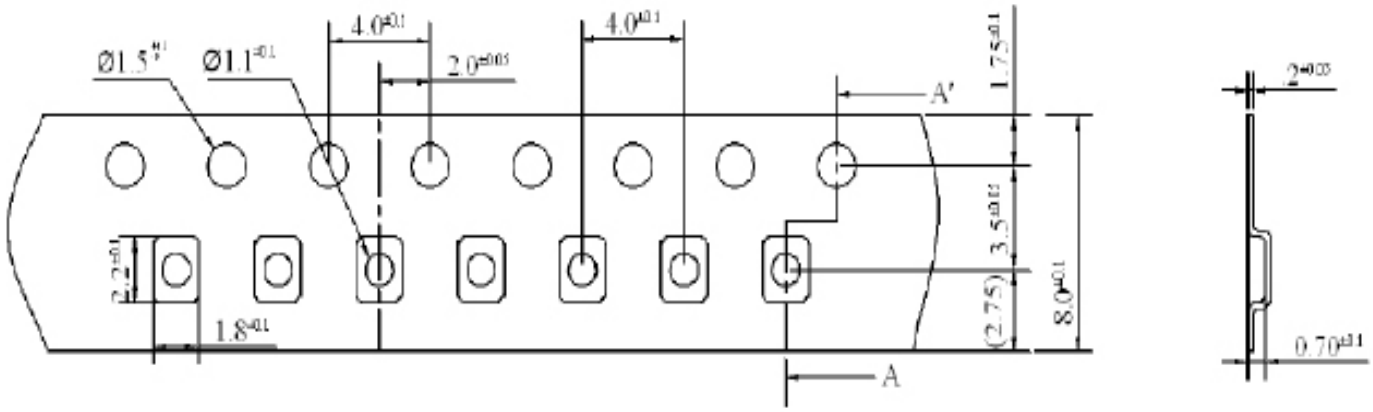

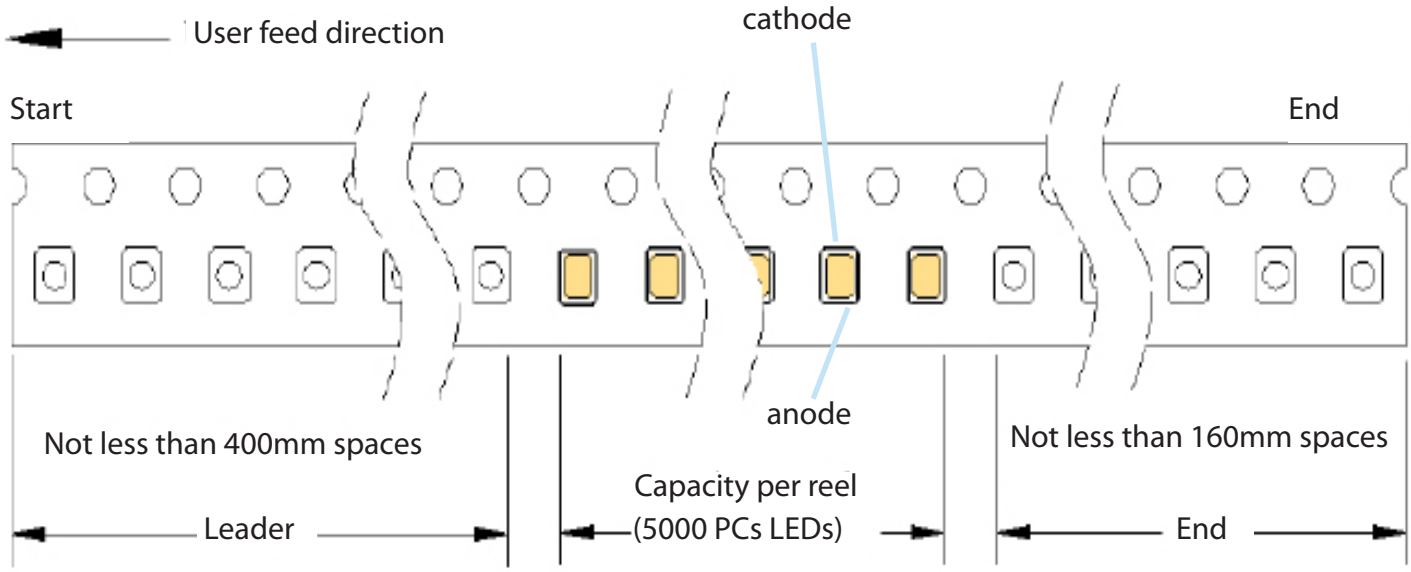

 © 2018 Luminus Devices, Inc. - All Rights Reserved

Package Dimensions of Reel (mm)

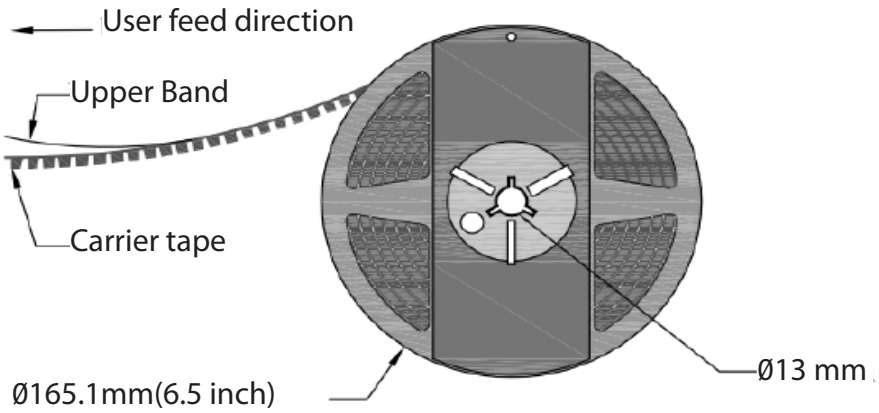

Package Dimensions of Reel (mm)

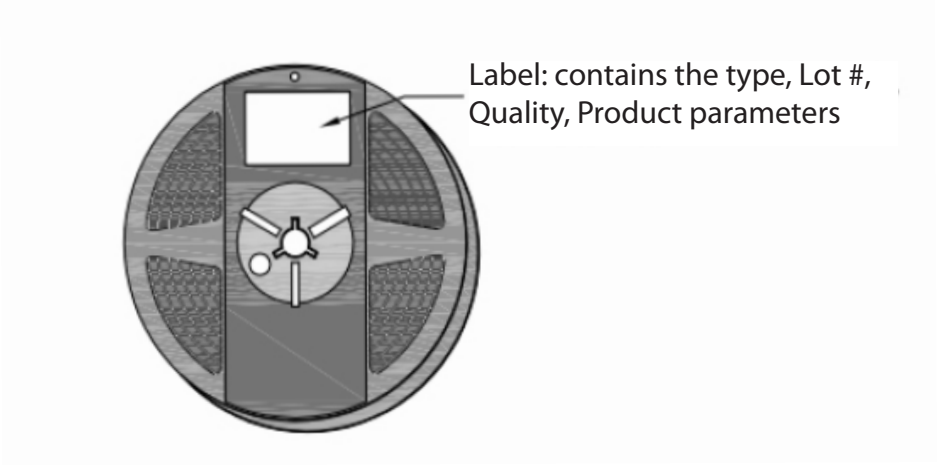

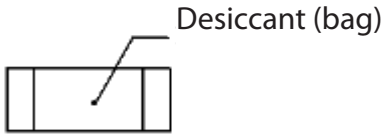

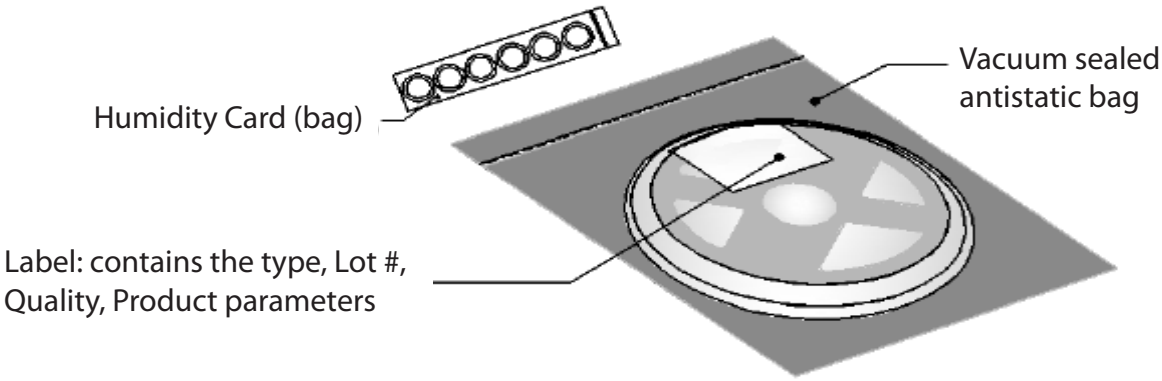

 © 2018 Luminus Devices, Inc. - All Rights Reserved

Box Packaging Information

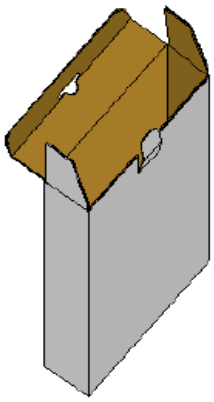

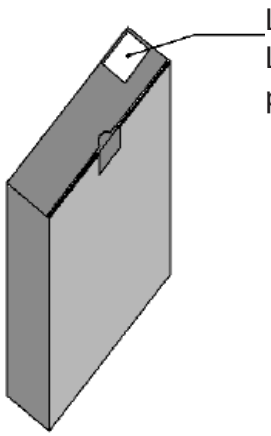

*Capacity 5 reels per box

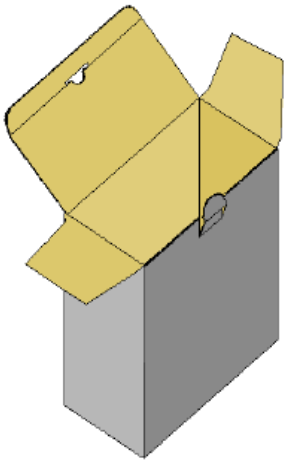

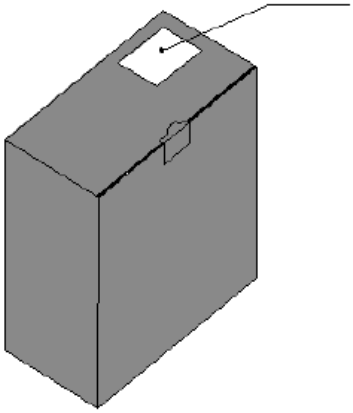

*Capacity 10 reels per box

 © 2018 Luminus Devices, Inc. - All Rights Reserved

Precaution for Use

Storage:

1. This device is rated at MSL 3 per JEDEC J-STD-020 standard.

2. Recommended storage condition:
   At 5 °C- 30 °C and relative humidity 60% RH in its original package

3. After this bag is opened, devices that will be applied to infrared reflow, vapor - phase reflow, or equivalent soldering process must be:
   a) Completed within 168 hours
   b) Stored at less than 60%RH
   c) If not completely used within 168 hours, seal the remaining in the moisture barrier bag

4. Devices require baking before mounting, if 3 a) is not met.

5. If baking is required, devices must be baked under below conditions:
   24 hours at 60C+/-5C

Static Electricity:

1. The products are sensitive to static electricity, and care should be taken when handling them.

2. Static electricity or surge voltage will damage the LEDs. It is recommended to wear a anti-electrostatic wristband or an anti-electrostatic gloves when handling the LEDs.

3. All devices, equipment and machinery must be properly grounded. It is recommended that measures be taken against surge voltage to the equipment that mounts the LEDs.

 © 2018 Luminus Devices, Inc. - All Rights Reserved

Change of History

Rev	Date	Detail
03	08/15/2018	update x,y targeting; chormaticity diagram

 © 2018 Luminus Devices, Inc. - All Rights Reserved

Компания «ЭлектроПласт» предлагает заключение долгосрочных отношений при поставках импортных электронных компонентов на взаимовыгодных условиях!

Наши преимущества:

- Оперативные поставки широкого спектра электронных компонентов отечественного и импортного производства напрямую от производителей и с крупнейших мировых складов;
- Поставка более 17-ти миллионов наименований электронных компонентов;
- Поставка сложных, дефицитных, либо снятых с производства позиций;
- Оперативные сроки поставки под заказ (от 5 рабочих дней);
- Экспресс доставка в любую точку России;
- Техническая поддержка проекта, помощь в подборе аналогов, поставка прототипов;
- Система менеджмента качества сертифицирована по Международному стандарту ISO 9001;
- Лицензия ФСБ на осуществление работ с использованием сведений, составляющих государственную тайну;
- Поставка специализированных компонентов (Xilinx, Altera, Analog Devices, Intersil, Interpoint, Microsemi, Aeroflex, Peregrine, Syfer, Eurofarad, Texas Instrument, Miteq, Cobham, E2V, MA-COM, Hittite, Mini-Circuits,General Dynamics и др.);

Помимо этого, одним из направлений компании «ЭлектроПласт» является направление «Источники питания». Мы предлагаем Вам помощь Конструкторского отдела:

- Подбор оптимального решения, техническое обоснование при выборе компонента;
- Подбор аналогов;
- Консультации по применению компонента;
- Поставка образцов и прототипов;
- Техническая поддержка проекта;
- Защита от снятия компонента с производства.

Как с нами связаться

Телефон: 8 (812) 309 58 32 (многоканальный)
Факс: 8 (812) 320-02-42
Электронная почта: org@eplast1.ru
Адрес: 198099, г. Санкт-Петербург, ул. Калинина, дом 2, корпус 4, литера А.