Thumbwheel Switch

# A7PS/A7PH

CSM_A7PS_A7PH_DS_E_3_1

## Dust-tight, Easy-to-Use, Push-operated Switches with Large Display Characters

- Simple push mechanism and large, easy-to-view numeric display make setting easy.
- Dust penetration prevented with seal for the display windows.

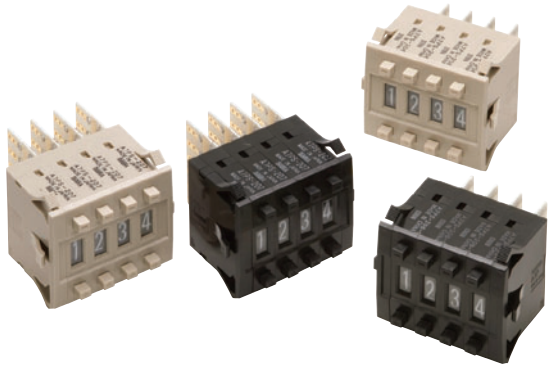

## Ordering Information

### Switches (Single Switch Units)

| Model | A7PS | | A7PH | |
|---|---|---|---|---|
| Classification (See note 1.) | Snap-in (front mounting) 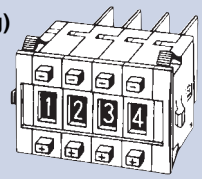 | | Snap-in (front mounting) 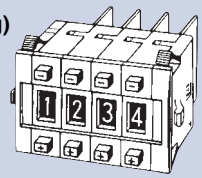 Long-life type | |
| Terminals | Solder terminals *1 | | | |
| Color | Light gray | Black | Light gray | Black |
| Output code number | Model | | | |
| 03 (decimal code) | A7PS-203 | A7PS-203-1 | A7PH-203 | A7PH-203-1 |
| 06 (binary coded decimal) | A7PS-206 | A7PS-206-1 | A7PH-206 | A7PH-206-1 |
| 07 (binary coded decimal, with component-adding provision) *2 | A7PS-207 | A7PS-207-1 | A7PH-207 | A7PH-207-1 |
| 19 (decimal code, with component-adding provision) | A7PS-219 | A7PS-219-1 | A7PH-219 | --- |
| 54 (binary coded hexadecimal) | A7PS-254 | A7PS-254-1 | A7PH-254 | A7PH-254-1 |
| 55 (binary coded hexadecimal, with component adding provision) *2 | A7PS-255 | A7PS-255-1 | --- | --- |

Note: 1. The classification diagrams show 4 Switch Units combined with End Caps to create 4-digit displays.
2. The model numbers given above are for 1 Switch Unit.
3. Models with stoppers are also available. Add "-S□□" after the "203," "206," "207," "219," "254," or "255" in the model number and specify the display range in the □□. For example, to specify the range 0 to 6, add "-S06" to the model number (e.g., A7PS-206-S06-1).
4. Models with +, - displays can also be produced. Add "-PM" after the "206" in the model number (e.g., A7PS-206-PM or A7PS-206-PM-1)

*1. Models with PCB terminals are available.
*2. Models with diodes are available. Add "-D" to the model number (e.g., A7PS-207-D or A7PS-207-D-1).

### Accessories (Order Separately)

Use accessories, such as End Caps and Spacers, with the Switch Units.

| Accessory | Color | Light gray | Black |
|---|---|---|---|
| End Caps | | A7P-M * | A7P-M-1 * |
| Spacer | | A7P-P□ (See note.) | A7P-P□-1 (See note.) |
| Connectors | Solder terminals | NRT-C | |
| | | NRT-CN | |
| | PCB terminals | NRT-CP | |

Note: The □ in the Spacer model number stands for a letter in the range A to U. (Refer to the table in the following explanation about Spacers.)
* The minimum order is for 10 End Caps.

### End Caps

End Caps are used on the Switch Units at each end and allow all the Switch Units to be securely mounted to a panel. They come in pairs, one for the left and one for the right.

### Spacers

- Spacers are used for creating extra space or gaps between the Switch Units and have the same dimensions as the Switch Units themselves.
- There are also Spacers with engraved characters or symbols that can be used for indicating units, such as time and length. (Refer to the following table.) Consult your OMRON representative for details.

| Symbol | A | B | C | D | E | F | G |
|---|---|---|---|---|---|---|---|
| Stamp | No designation | SEC | MIN | H | g | kg | mm |

| Symbol | H | J | K | L | Q | T | U |
|---|---|---|---|---|---|---|---|
| Stamp | cm | m | °C | PCS | x 10 SEC | 0 | • |

## Specifications

| Item | | Model | A7PS | A7PH |
|---|---|---|---|---|
| Switching capacity (resistive load) | | | 50 VAC or 5 to 28 VDC<br>1 mA to 0.1 A | 125 VAC or 5 to 28 VDC<br>10 μA to 0.15 A |
| Continuous carry current | | | 1 A max. | 3 A max. |
| Contact resistance | | | 300 mΩ max. | |
| Insulation resistance | Between non-connected terminals | | 10 MΩ min. (at 500 VDC) | 100 MΩ min. (at 500 VDC) |
| | Between terminal and non-current carrying part | | 1,000 MΩ min. (at 500 VDC) | |
| Dielectric strength | Between non-connected terminals | | 600 VAC, 50/60 Hz for 1 min | |
| | Between terminal and non-current carrying part | | 1,000 VAC, 50/60 Hz for 1 min | |
| Vibration resistance | | | 10 to 55 Hz, 1.5-mm double amplitude for 2 hours min. | |
| Shock resistance | | | 490 m/s² min. | |
| Durability | Mechanical | | 100,000 operations min. | 2,000,000 operations min. |
| | Electrical | | 50,000 operations min. | 1,000,000 operations min. |
| Ambient temperature | | | Operating: -10°C to 65°C | |
| Ambient humidity | | | Operating: 45% to 85% | |
| Max. operating force | | | 6.37 N max. | |

## Dimensions

(Unit: mm)

### Switches

**A7PS-2□□(-1)**
**A7PH-2□□(-1)**
**Solder Terminal**

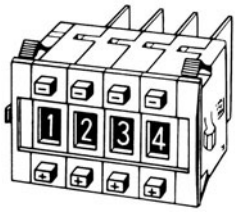

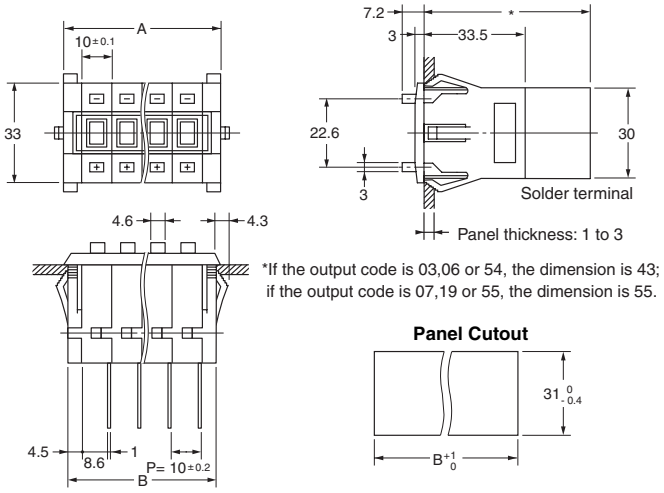


*If the output code is 03,06 or 54, the dimension is 43; if the output code is 07,19 or 55, the dimension is 55.

| Number of Switches (n) | Size A (n x 10 + 12) | Size B (n x 10 + 9) |
|---|---|---|
| 1 | 22 | 19 |
| 2 | 32 | 29 |
| 3 | 42 | 39 |
| 4 | 52 | 49 |
| 5 | 62 | 59 |
| 6 | 72 | 69 |
| 7 | 82 | 79 |
| 8 | 92 | 89 |
| 9 | 102 | 99 |
| 10 | 112 | 109 |

Note: 1. The dimensions above include both End Caps, and will increase 10 mm for each Spacer inserted.
2. Unless otherwise specified, a tolerance of ±0.4 mm applies to all dimensions. The tolerance for multiple connection is ±(number of units x 0.4) mm.

### Accessories (Order Separately)

**End Caps for Push-operated Switches**
**A7P-M(-1) Snap-in Panel Mounting**

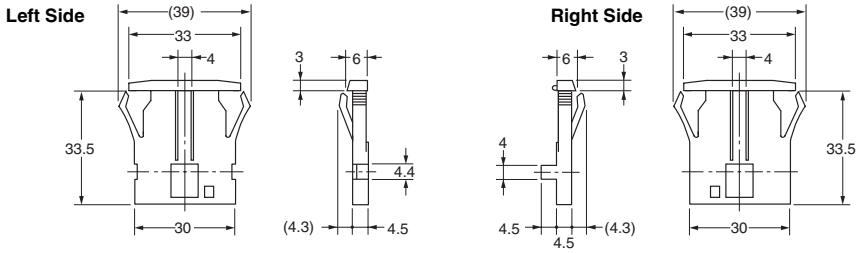


**Spacers for Push-operated Switches**
**A7P-P□(-1) Snap-in Panel Mounting**

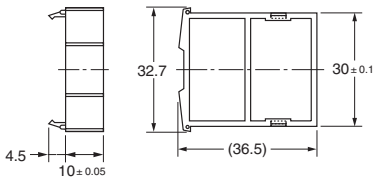


The □ in the Spacer model number stands for a letter in the range A to U. (Refer to the table under the explanation about Spacers on page 1.)

Note: Unless otherwise indicated, dimensional tolerances for dimensions in the models above are ± 0.4 mm.

### Connectors

(These devices allow Switches to be quickly removed for maintenance and inspection of connectivity, and quickly re-installed.)

**NRT-C Solder Terminals**

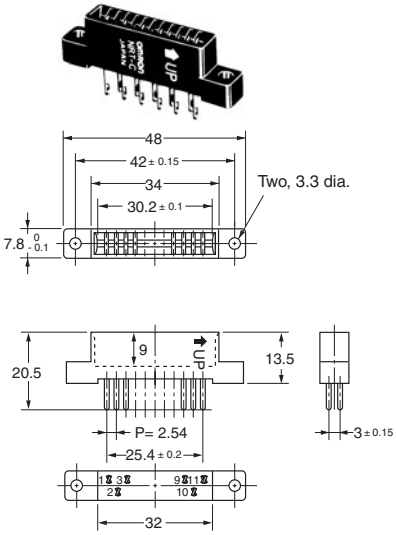


**NRT-CN Solder Terminals**

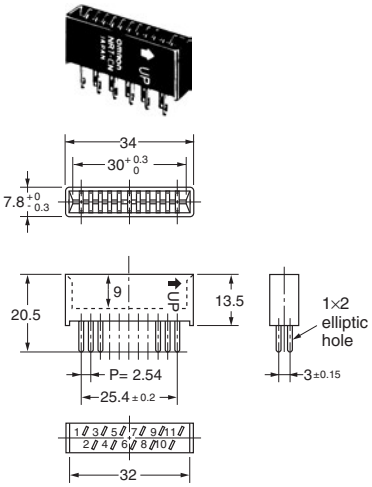


**NRT-CP PCB Terminals**

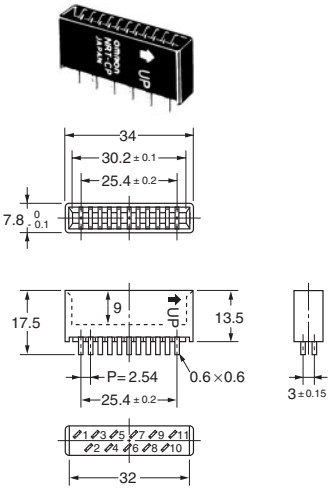


Note: Unless otherwise indicated, dimensional tolerances for dimensions in the models above are ± 0.4 mm.

### Inserting Connectors

Insert Connectors with the “UP” arrow pointing up.

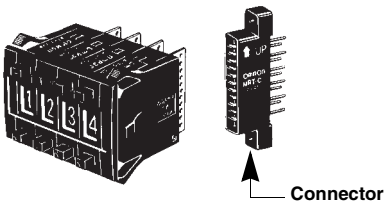


## Output Codes/Terminals

- Switches with output codes 06 or 07 both use binary coded decimal but Switches with output code 07 have a component-adding provision. Similarly, Switches with output codes 54 or 55 both use binary coded hexadecimal but Switches with output code 55 have a component-adding provision.
- How to Read Output Codes
  For example, when the dial position is “3,” the common terminal C on the Switch is connected to terminals 1 and 2. When the Switch is inserted into the Connector, the common terminal C becomes connector terminal 3, and terminals 1 and 2 become connector terminals 5 and 7 respectively.

| Output code number | Terminals | Output codes |
|---|---|---|
| 03 | 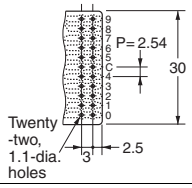 | |
| 19 | 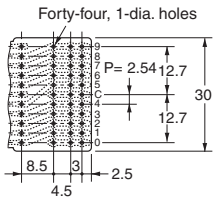 | |
| 06 | 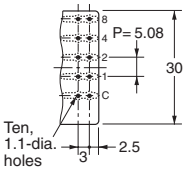 | |
| 07 | 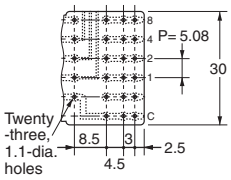 | |





Component-adding provision





Component-adding provision

| Model | Switch Unit or Connector | Common terminal number | Terminals connected to common | | | | | | | | | |
|---|---|---|---|---|---|---|---|---|---|---|---|---|
| | Switch Unit | C | 0 | 1 | 2 | 3 | 4 | 5 | 6 | 7 | 8 | 9 |
| 03,19 | Connector | 6 | 1 | 2 | 3 | 4 | 5 | 7 | 8 | 9 | 10 | 11 |
| Dial | 0 | | ● | | | | | | | | | |
| | 1 | | | ● | | | | | | | | |
| | 2 | | | | ● | | | | | | | |
| | 3 | | | | | ● | | | | | | |
| | 4 | | | | | | ● | | | | | |
| | 5 | | | | | | | ● | | | | |
| | 6 | | | | | | | | ● | | | |
| | 7 | | | | | | | | | ● | | |
| | 8 | | | | | | | | | | ● | |
| | 9 | | | | | | | | | | | ● |

Note: The solid dot ● indicates that the internal switch is ON (i.e., connected to the common terminal).

| Model | Switch Unit or Connector | Common terminal number | Terminals connected to common | | | |
|---|---|---|---|---|---|---|
| | Switch Unit | C | 1 | 2 | 4 | 8 |
| 06 | Connector | 3 | 5 | 7 | 9 | 11 |
| 07 | Connector | 1 | | | | |
| Dial | 0 | | | | | |
| | 1 | | ● | | | |
| | 2 | | | ● | | |
| | 3 | | ● | ● | | |
| | 4 | | | | ● | |
| | 5 | | ● | | ● | |
| | 6 | | | ● | ● | |
| | 7 | | ● | ● | ● | |
| | 8 | | | | | ● |
| | 9 | | ● | | | ● |

Note: The solid dot ● indicates that the internal switch is ON (i.e., connected to the common terminal).

| Output code number | Terminals | Output codes |
|---|---|---|
| 54 | 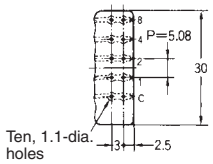 | |
| 55 | 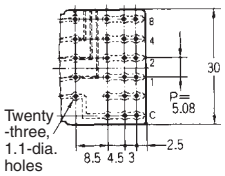 <br>Component-adding provision | |

| Model | Switch Unit or Connector | Common terminal number | Terminals connected to common | | | |
|---|---|---|---|---|---|---|
| | Switch Unit | C | 1 | 2 | 4 | 8 |
| 54 | Connector | 3 | 5 | 7 | 9 | 11 |
| 55 | Connector | 1 | | | | |
| Dial | 0 | | | | | |
| | 1 | | ● | | | |
| | 2 | | | ● | | |
| | 3 | | ● | ● | | |
| | 4 | | | | ● | |
| | 5 | | ● | | ● | |
| | 6 | | | ● | ● | |
| | 7 | | ● | ● | ● | |
| | 8 | | | | | ● |
| | 9 | | ● | | | ● |
| | A | | | ● | | ● |
| | B | | ● | ● | | ● |
| | C | | | | ● | ● |
| | D | | ● | | ● | ● |
| | E | | | ● | ● | ● |
| | F | | ● | ● | ● | ● |

Note: 1. The solid dot I indicates that the internal switch is ON (i.e., connected to the common terminal).

## Ordering Procedure

Place orders as shown in the example below, specifying the model and number.

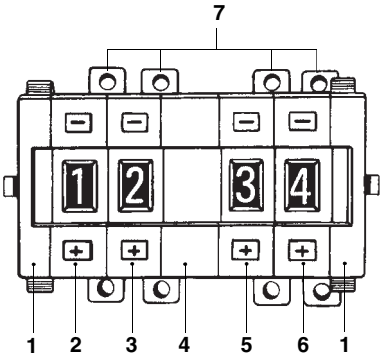


1. A7P-M (End Caps): 1 set
2. A7PS-203 (Switch Unit): 1 piece
3. A7PS-206 (Switch Unit): 1 piece
4. A7P-PA (Spacer): 1 piece
5. A7PS-207 (Switch Unit): 1 piece
6. A7PS-219 (Switch Unit): 1 piece

Note: Standard products are not factory-assembled for shipment. Contact your OMRON representative for details on ordering factory-assembled sets.

7. NRT-C (Connector): 4 pieces

## Safety Precautions

**Refer to *Precautions for Correct Use* on in the *Technical Guide for Thumbwheel Switches*.**

### Precautions for Correct Use

**Handling**

- The molded components of the Switch use polyacetal resin and ABS resin. It is recommended that alcohol is used to wipe off dirt and smudges from the molded components. Take care to prevent the alcohol from getting inside.
- A7P Thumbwheel Switches are dust-proof, but they are not drip-proof. Do not use them in areas subject to water or oil exposure.
- Do not allow solder flux or alcohol to enter the Switch.
- Do not push the (+) and (-) operating push-buttons at the same time.

## Read and Understand This Catalog

Please read and understand this catalog before purchasing the products. Please consult your OMRON representative if you have any questions or comments.

## Warranty and Limitations of Liability

### WARRANTY

OMRON's exclusive warranty is that the products are free from defects in materials and workmanship for a period of one year (or other period if specified) from date of sale by OMRON.

OMRON MAKES NO WARRANTY OR REPRESENTATION, EXPRESS OR IMPLIED, REGARDING NON-INFRINGEMENT, MERCHANTABILITY, OR FITNESS FOR PARTICULAR PURPOSE OF THE PRODUCTS. ANY BUYER OR USER ACKNOWLEDGES THAT THE BUYER OR USER ALONE HAS DETERMINED THAT THE PRODUCTS WILL SUITABLY MEET THE REQUIREMENTS OF THEIR INTENDED USE. OMRON DISCLAIMS ALL OTHER WARRANTIES, EXPRESS OR IMPLIED.

### LIMITATIONS OF LIABILITY

OMRON SHALL NOT BE RESPONSIBLE FOR SPECIAL, INDIRECT, OR CONSEQUENTIAL DAMAGES, LOSS OF PROFITS OR COMMERCIAL LOSS IN ANY WAY CONNECTED WITH THE PRODUCTS, WHETHER SUCH CLAIM IS BASED ON CONTRACT, WARRANTY, NEGLIGENCE, OR STRICT LIABILITY.

In no event shall the responsibility of OMRON for any act exceed the individual price of the product on which liability is asserted.

IN NO EVENT SHALL OMRON BE RESPONSIBLE FOR WARRANTY, REPAIR, OR OTHER CLAIMS REGARDING THE PRODUCTS UNLESS OMRON'S ANALYSIS CONFIRMS THAT THE PRODUCTS WERE PROPERLY HANDLED, STORED, INSTALLED, AND MAINTAINED AND NOT SUBJECT TO CONTAMINATION, ABUSE, MISUSE, OR INAPPROPRIATE MODIFICATION OR REPAIR.

## Application Considerations

### SUITABILITY FOR USE

OMRON shall not be responsible for conformity with any standards, codes, or regulations that apply to the combination of products in the customer's application or use of the products.

At the customer's request, OMRON will provide applicable third party certification documents identifying ratings and limitations of use that apply to the products. This information by itself is not sufficient for a complete determination of the suitability of the products in combination with the end product, machine, system, or other application or use.

The following are some examples of applications for which particular attention must be given. This is not intended to be an exhaustive list of all possible uses of the products, nor is it intended to imply that the uses listed may be suitable for the products:

- Outdoor use, uses involving potential chemical contamination or electrical interference, or conditions or uses not described in this catalog.
- Nuclear energy control systems, combustion systems, railroad systems, aviation systems, medical equipment, amusement machines, vehicles, safety equipment, and installations subject to separate industry or government regulations.
- Systems, machines, and equipment that could present a risk to life or property.

Please know and observe all prohibitions of use applicable to the products.

NEVER USE THE PRODUCTS FOR AN APPLICATION INVOLVING SERIOUS RISK TO LIFE OR PROPERTY WITHOUT ENSURING THAT THE SYSTEM AS A WHOLE HAS BEEN DESIGNED TO ADDRESS THE RISKS, AND THAT THE OMRON PRODUCTS ARE PROPERLY RATED AND INSTALLED FOR THE INTENDED USE WITHIN THE OVERALL EQUIPMENT OR SYSTEM.

### PROGRAMMABLE PRODUCTS

OMRON shall not be responsible for the user's programming of a programmable product, or any consequence thereof.

## Disclaimers

### CHANGE IN SPECIFICATIONS

Product specifications and accessories may be changed at any time based on improvements and other reasons.

It is our practice to change model numbers when published ratings or features are changed, or when significant construction changes are made. However, some specifications of the products may be changed without any notice. When in doubt, special model numbers may be assigned to fix or establish key specifications for your application on your request. Please consult with your OMRON representative at any time to confirm actual specifications of purchased products.

### DIMENSIONS AND WEIGHTS

Dimensions and weights are nominal and are not to be used for manufacturing purposes, even when tolerances are shown.

### PERFORMANCE DATA

Performance data given in this catalog is provided as a guide for the user in determining suitability and does not constitute a warranty. It may represent the result of OMRON's test conditions, and the users must correlate it to actual application requirements. Actual performance is subject to the OMRON Warranty and Limitations of Liability.

### ERRORS AND OMISSIONS

The information in this document has been carefully checked and is believed to be accurate; however, no responsibility is assumed for clerical, typographical, or proofreading errors, or omissions.

2011.2

**In the interest of product improvement, specifications are subject to change without notice.**

**OMRON Corporation**
**Industrial Automation Company**

**http://www.ia.omron.com/**

(c)Copyright OMRON Corporation 2011 All Right Reserved.

Компания «ЭлектроПласт» предлагает заключение долгосрочных отношений при поставках импортных электронных компонентов на взаимовыгодных условиях!

Наши преимущества:

- Оперативные поставки широкого спектра электронных компонентов отечественного и импортного производства напрямую от производителей и с крупнейших мировых складов;
- Поставка более 17-ти миллионов наименований электронных компонентов;
- Поставка сложных, дефицитных, либо снятых с производства позиций;
- Оперативные сроки поставки под заказ (от 5 рабочих дней);
- Экспресс доставка в любую точку России;
- Техническая поддержка проекта, помощь в подборе аналогов, поставка прототипов;
- Система менеджмента качества сертифицирована по Международному стандарту ISO 9001;
- Лицензия ФСБ на осуществление работ с использованием сведений, составляющих государственную тайну;
- Поставка специализированных компонентов (Xilinx, Altera, Analog Devices, Intersil, Interpoint, Microsemi, Aeroflex, Peregrine, Syfer, Eurofarad, Texas Instrument, Miteq, Cobham, E2V, MA-COM, Hittite, Mini-Circuits,General Dynamics и др.);

Помимо этого, одним из направлений компании «ЭлектроПласт» является направление «Источники питания». Мы предлагаем Вам помощь Конструкторского отдела:

- Подбор оптимального решения, техническое обоснование при выборе компонента;
- Подбор аналогов;
- Консультации по применению компонента;
- Поставка образцов и прототипов;
- Техническая поддержка проекта;
- Защита от снятия компонента с производства.

**Как с нами связаться**

**Телефон:** 8 (812) 309 58 32 (многоканальный)
**Факс:** 8 (812) 320-02-42
**Электронная почта:** org@eplast1.ru
**Адрес:** 198099, г. Санкт-Петербург, ул. Калинина, дом 2, корпус 4, литера А.