THIS DRAWING IS UNPUBLISHED. RELEASED FOR PUBLICATION -,- .
© COPYRIGHT 2010 BY TYCO ELECTRONICS CORPORATION. ALL RIGHTS RESERVED.

| LOC | DIST |
|---|---|
| DW | — |

REVISIONS

| P | LTR | DESCRIPTION | DATE | DWN | APVD |
|---|---|---|---|---|---|
| | A4 | REVISED (ECR-12-012566) RELEASED PN 5-1734324-9 | 10AUG'12 | E.L. | W.K. |

| LED SCHEMATIC | |
|---|---|
| LED 2 | LED 1 |
| 9+ ▷ −10 | 11+ ▷ −12 |

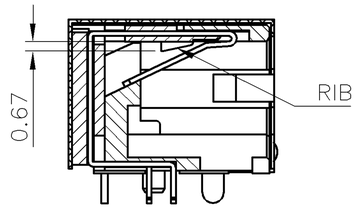


SECTION A–A

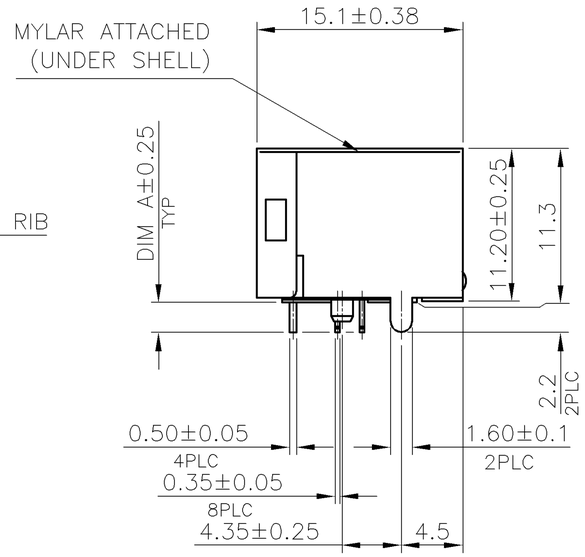


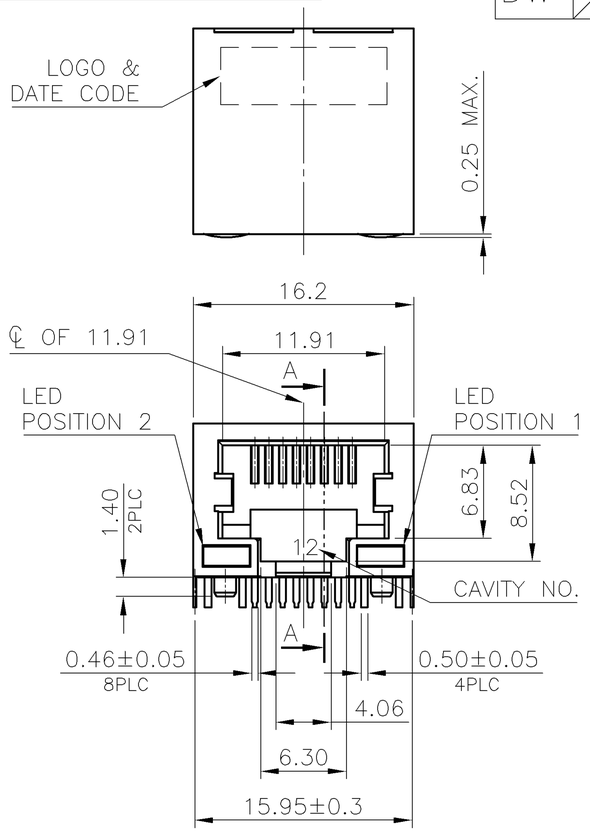


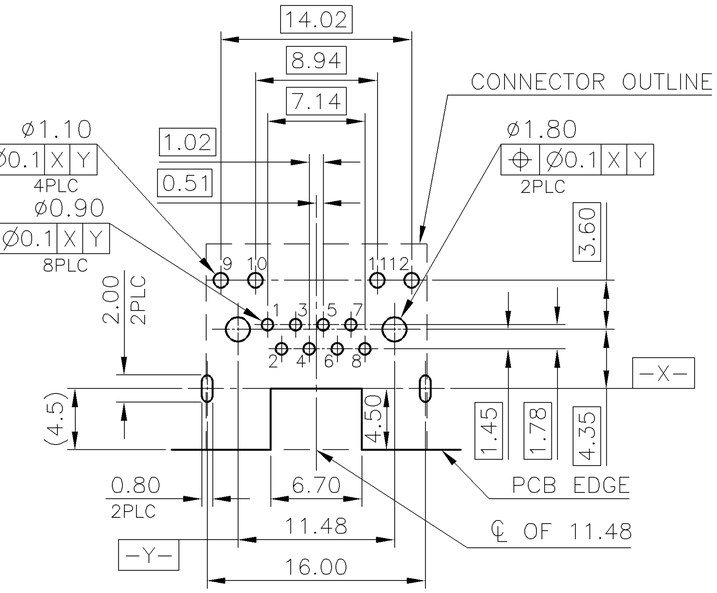


RECOMMENDED PCB LAYOUT (TOP VIEW)
PCB THICKNESS: 1.6mm, TOLERANCE: ±0.05

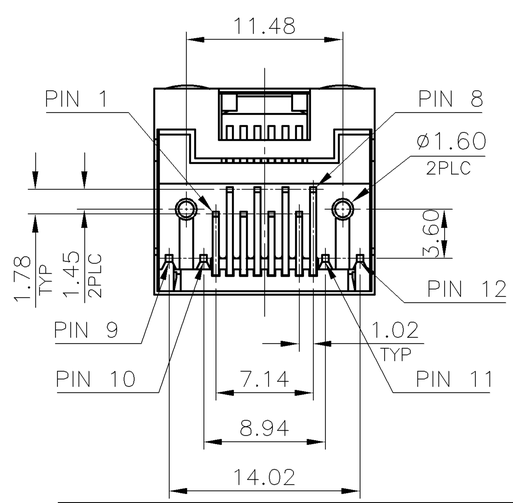


| | PACKAGE | DIM A | POSITION 2 INDICATOR COLOR | POSITION 1 INDICATOR COLOR | MIN. GOLD THICKNESS | PART NUMBER |
|---|---|---|---|---|---|---|
| 6 OBSOLETE | REEL | 2.2 | YELLOW | GREEN | 1.27um[50u"] | 1-1734324-8 |
| | | | | | 0.762um[30u"] | ~~1-1734324-7~~ |
| | | | | | 0.381um[15u"] | ~~1-1734324-6~~ |
| | | | | | 0.152um[6u"] | ~~1-1734324-5~~ |
| | | | GREEN | YELLOW | 1.27um[50u"] | ~~1-1734324-4~~ |
| | | | | | 0.762um[30u"] | 1-1734324-3 |
| | | | | | 0.381um[15u"] | 1-1734324-2 |
| | | | | | 0.152um[6u"] | ~~1-1734324-1~~ |
| 6 OBSOLETE | TRAY | | YELLOW | GREEN | 1.27um[50u"] | ~~1734324-8~~ |
| | | | | | 0.762um[30u"] | 1734324-7 |
| | | | | | 0.381um[15u"] | 1734324-6 |
| | | | | | 0.152um[6u"] | 1734324-5 |
| 6 OBSOLETE | | | GREEN | YELLOW | 1.27um[50u"] | ~~1734324-4~~ |
| | | | | | 0.762um[30u"] | 1734324-3 |
| 6 OBSOLETE | | | | | 0.381um[15u"] | ~~1734324-2~~ |
| | | | | | 0.152um[6u"] | 1734324-1 |

NOTE:

1. MATERIAL:
   1.1 HOUSING: PA46, WITH 30% GF, UL94 V-0, BLACK COLOR.
   1.2 INSERT HOUSING: PA46, WITH 30% GF, UL94 V-0, BLACK COLOR.
   1.3 CONTACTS: PHOSPHOR BRONZE.
   1.4 SHELL: BRASS.
   1.5 LED SOLDER TAIL: STEEL.
   1.6 MYLAR: SILICONE POLYMER.
2. FINISH:
   2.1 CONTACTS: (SEE TABLE) GOLD PLATED ON CONTACT AREA.
   GOLD FLASH ON SOLDER TAIL.
   1.27um [50u"] MIN. NICKEL UNDERPLATED OVERALL.
   2.2 SHELL: 0.508um [20u"] MIN. NICKEL PLATED.
   2.3 LED: 1.02um [40u"] COPPER UNDERPLATED OVERALL.
   1.27um [50u"] NICKEL OVERALL.
   1.27um [50u"] SILVER ON BONDING AREA.
   2.54um [100u"] BRIGHT-TIN ON SOLDER AREA.
3. LED MUST BE REFLOW COMPATIBLE TO FOLLOWING TEMPERATURE PROFILE (FOR 1 CYCLE): ABOVE 160°C FOR 120 SECONDS, PEAKING AT 220°C FOR 10 SECONDS.
4. LED DEFECT RATE IS 6000 PPM MAX. AFTER IR REFLOW PROCESS AS NOTE 3.
5. WAVE SOLDER CAPABLE TO 265°C PER TE SPEC 109-202, CONDITION B.
6. OBSOLETE PARTS: OBSOLETE CIS STREAMLINING PER D.RENAUD/D.SINISI.

THIS DRAWING IS A CONTROLLED DOCUMENT.

DIMENSIONS: mm

TOLERANCES UNLESS OTHERWISE SPECIFIED:
0 PLC ± –
1 PLC ± 0.3
2 PLC ± 0.2
3 PLC ± 0.15
4 PLC ± –
ANGLES ± 3°

MATERIAL: SEE NOTE
FINISH: SEE NOTE

| | | |
|---|---|---|
| DWN | A. WU | 04MAR2008 |
| CHK | S. HOU | 04MAR2008 |
| APVD | W. KODAMA | 04MAR2008 |
| PRODUCT SPEC | 108-57535 | |
| APPLICATION SPEC | — | |
| WEIGHT | 4.5 GRAMS | |

TE Connectivity

NAME: MODULAR JACK CONNECTOR
RJ45 WITH LED, 8P8C, SHIELDED
TAB DOWN, DIP TYPE, H=11.3mm

| SIZE | CAGE CODE | DRAWING NO | RESTRICTED TO |
|---|---|---|---|
| A3 | 00779 | C-1734324 | — |

CUSTOMER DRAWING | SCALE — | SHEET 1 OF 7 | REV A4

THIS DRAWING IS UNPUBLISHED. RELEASED FOR PUBLICATION -,- .
© COPYRIGHT 2010 BY TYCO ELECTRONICS CORPORATION. ALL RIGHTS RESERVED.

| LOC | DIST |
|---|---|
| DW | — |

REVISIONS

| P | LTR | DESCRIPTION | DATE | DWN | APVD |
|---|---|---|---|---|---|
| | | SEE SHEET 1. | | | |

| LED SCHEMATIC | |
|---|---|
| LED 2 | LED 1 |
| 9+ —▷|— −10 | 11− —◁|— +12 |

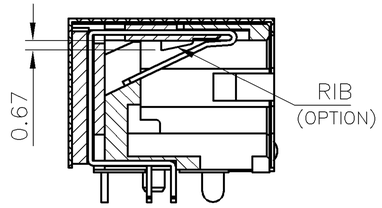


SECTION A–A

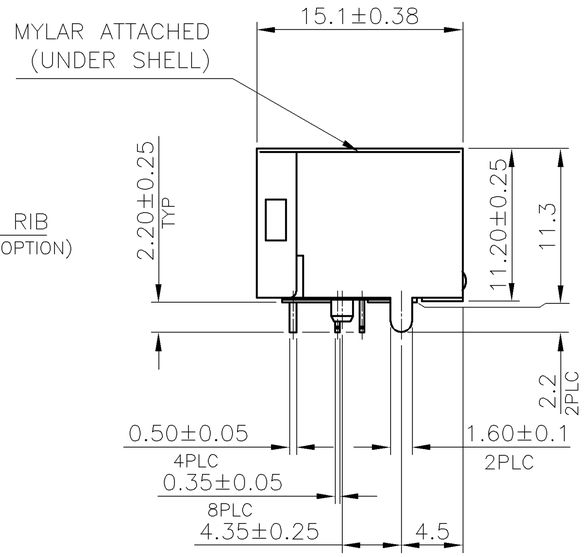


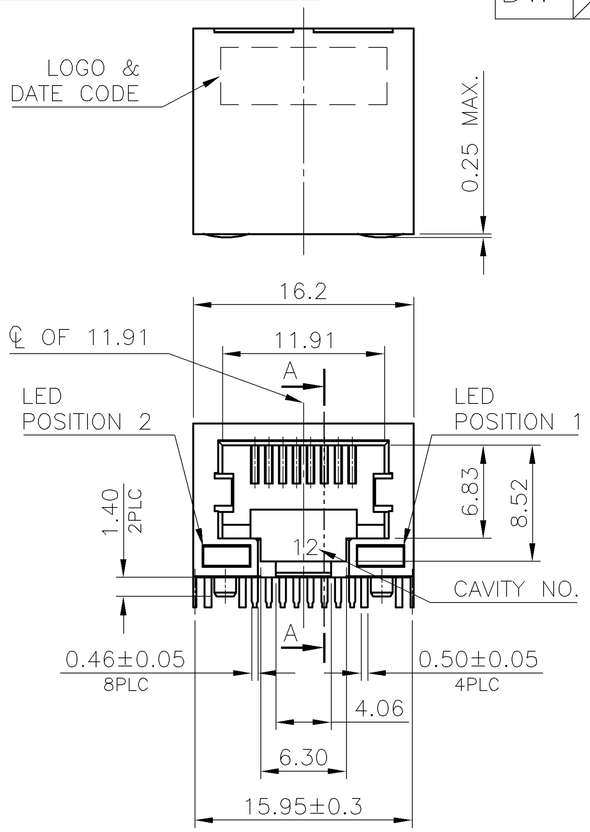


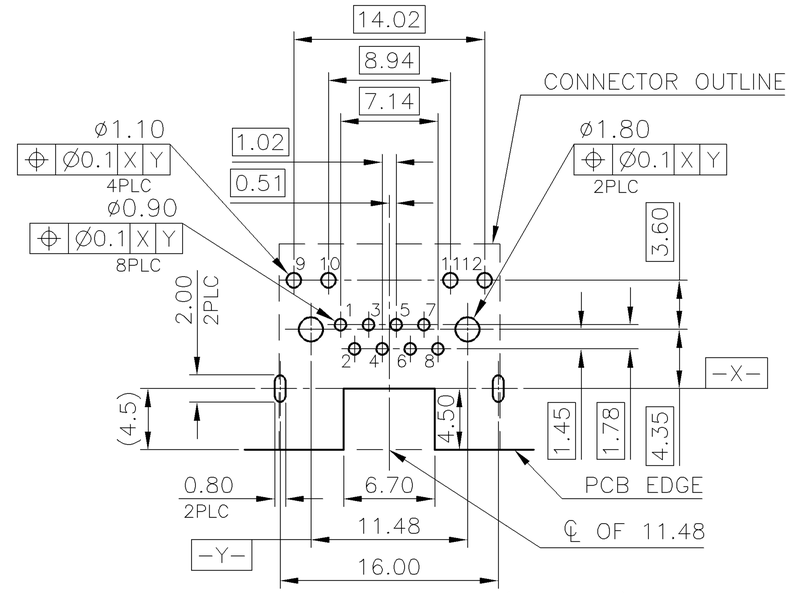


RECOMMENDED PCB LAYOUT (TOP VIEW)
PCB THICKNESS: 1.6mm, TOLERANCE: ±0.05

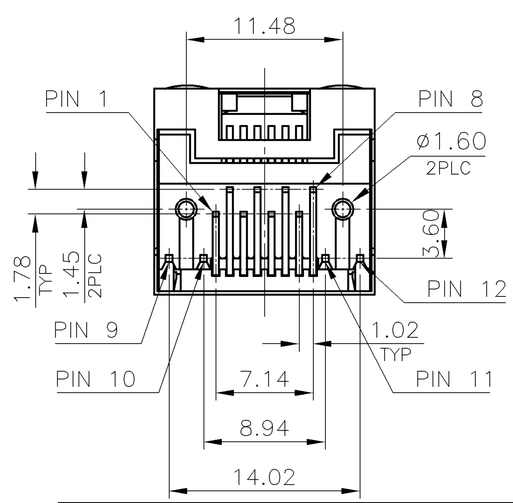


NOTE:

1. MATERIAL:
   - 1.1 HOUSING: PA46, WITH 30% GF, UL94 V–0, BLACK COLOR.
   - 1.2 INSERT HOUSING: PA46, WITH 30% GF, UL94 V–0, BLACK COLOR.
   - 1.3 CONTACTS: PHOSPHOR BRONZE.
   - 1.4 SHELL: BRASS.
   - 1.5 LED SOLDER TAIL: STEEL.
   - 1.6 MYLAR: SILICONE POLYMER.
2. FINISH:
   - 2.1 CONTACTS: (SEE TABLE) GOLD PLATED ON CONTACT AREA.
     GOLD FLASH ON SOLDER TAIL.
     1.27um [50u"] MIN. NICKEL UNDERPLATED OVERALL.
   - 2.2 SHELL: 0.508um [20u"] MIN. NICKEL PLATED.
   - 2.3 LED: 1.02um [40u"] COPPER UNDERPLATED OVERALL.
     1.27um [50u"] NICKEL OVERALL.
     1.27um [50u"] SILVER ON BONDING AREA.
     2.54um [100u"] BRIGHT–TIN ON SOLDER AREA.
3. LED MUST BE REFLOW COMPATIBLE TO FOLLOWING TEMPERATURE PROFILE (FOR 1 CYCLE): ABOVE 160°C FOR 120 SECONDS, PEAKING AT 220°C FOR 10 SECONDS.
4. LED DEFECT RATE IS 6000 PPM MAX. AFTER IR REFLOW PROCESS AS NOTE 3.
5. WAVE SOLDER CAPABLE TO 265°C PER TE SPEC 109–202, CONDITION B.
6. △6 OBSOLETE PARTS: OBSOLETE CIS STREAMLINING PER D.RENAUD/D.SINISI.

| RIB | PACKAGE | POSITION 2 INDICATOR COLOR | POSITION 1 INDICATOR COLOR | MIN. GOLD THICKNESS | PART NUMBER |
|---|---|---|---|---|---|
| △6 OBSOLETE, W/O | TAPE & REEL | YELLOW | GREEN | 1.27um[50u"] | ~~3–1734324–8~~ |
| | | | | 0.762um[30u"] | ~~3–1734324–7~~ |
| | | | | 0.381um[15u"] | ~~3–1734324–6~~ |
| | | | | 0.152um[6u"] | ~~3–1734324–5~~ |
| | | GREEN | YELLOW | 1.27um[50u"] | 3–1734324–4 |
| | | | | 0.762um[30u"] | ~~3–1734324–3~~ |
| | | | | 0.381um[15u"] | ~~3–1734324–2~~ |
| | | | | 0.152um[6u"] | ~~3–1734324–1~~ |
| △6 OBSOLETE, W/ | TRAY | YELLOW | GREEN | 1.27um[50u"] | ~~2–1734324–8~~ |
| | | | | 0.762um[30u"] | ~~2–1734324–7~~ |
| | | | | 0.381um[15u"] | ~~2–1734324–6~~ |
| | | | | 0.152um[6u"] | ~~2–1734324–5~~ |
| | | GREEN | YELLOW | 1.27um[50u"] | ~~2–1734324–4~~ |
| | | | | 0.762um[30u"] | ~~2–1734324–3~~ |
| | | | | 0.381um[15u"] | ~~2–1734324–2~~ |
| | | | | 0.152um[6u"] | ~~2–1734324–1~~ |

THIS DRAWING IS A CONTROLLED DOCUMENT.

DIMENSIONS: mm

TOLERANCES UNLESS OTHERWISE SPECIFIED:

| | |
|---|---|
| 0 PLC | ± – |
| 1 PLC | ± 0.3 |
| 2 PLC | ± 0.2 |
| 3 PLC | ± 0.15 |
| 4 PLC | ± – |
| ANGLES | ± 3° |

MATERIAL –

FINISH –

DWN –
CHK –
APVD –
PRODUCT SPEC –
APPLICATION SPEC –
WEIGHT –

TE Connectivity

NAME

MODULAR JACK CONNECTOR
RJ45 WITH LED, 8P8C, SHIELDED
TAB DOWN, DIP TYPE, H=11.3mm

| SIZE | CAGE CODE | DRAWING NO | RESTRICTED TO |
|---|---|---|---|
| A3 | 00779 | C–1734324 | — |

CUSTOMER DRAWING | SCALE — | SHEET 2 OF 7 | REV A4

THIS DRAWING IS UNPUBLISHED. RELEASED FOR PUBLICATION -,- .
© COPYRIGHT 2010 BY TYCO ELECTRONICS CORPORATION. ALL RIGHTS RESERVED.

| LOC | DIST |
|---|---|
| DW | — |

REVISIONS

| P | LTR | DESCRIPTION | DATE | DWN | APVD |
|---|---|---|---|---|---|
| | | SEE SHEET 1. | | | |

| LED SCHEMATIC | |
|---|---|
| LED 2 | LED 1 |
| 9+ —▷— −10 | ORANGE 11 + ▷ − 12 − ◁ + GREEN |

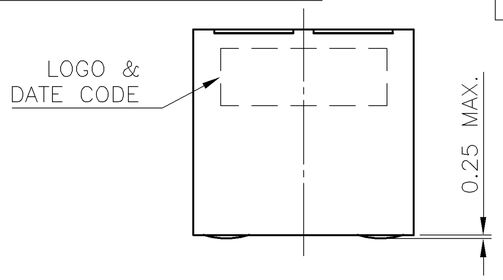


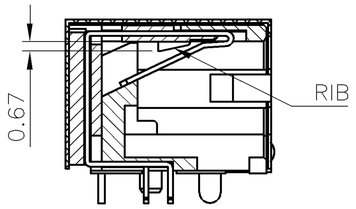


SECTION A–A

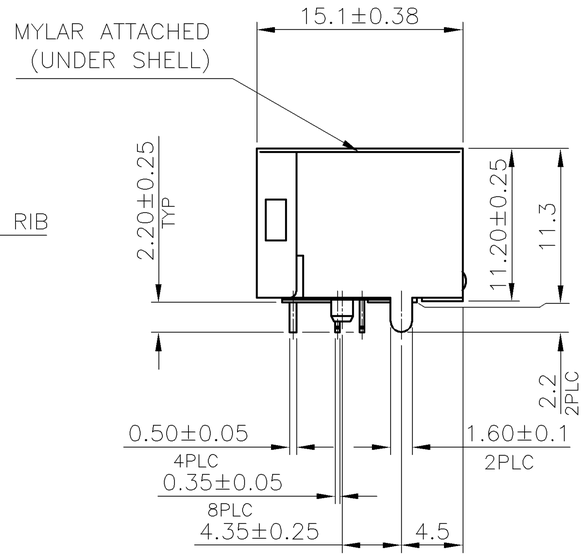


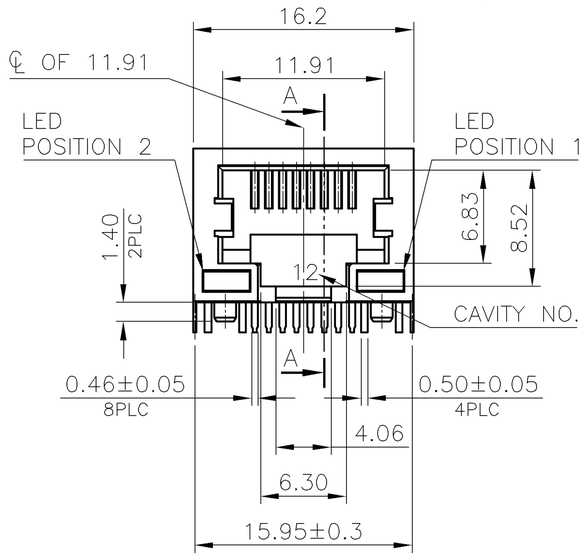


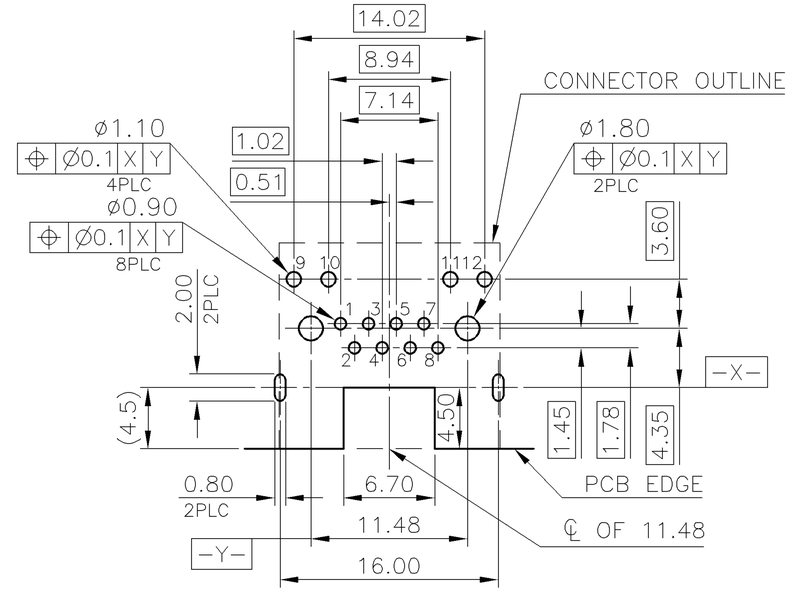


RECOMMENDED PCB LAYOUT (TOP VIEW)
PCB THICKNESS: 1.6mm, TOLERANCE: ±0.05

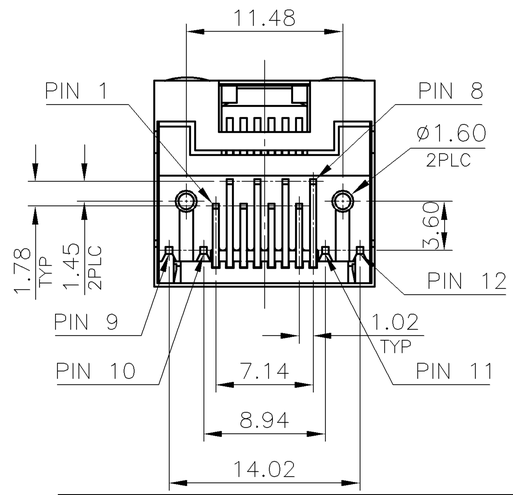


NOTE:

1. MATERIAL:
   - 1.1 HOUSING: PA46, WITH 30% GF, UL94 V–0, BLACK COLOR.
   - 1.2 INSERT HOUSING: PA46, WITH 30% GF, UL94 V–0, BLACK COLOR.
   - 1.3 CONTACTS: PHOSPHOR BRONZE.
   - 1.4 SHELL: BRASS.
   - 1.5 LED SOLDER TAIL: STEEL.
   - 1.6 MYLAR: SILICONE POLYMER.
2. FINISH:
   - 2.1 CONTACTS: (SEE TABLE) GOLD PLATED ON CONTACT AREA.
     GOLD FLASH ON SOLDER TAIL.
     1.27um [50u"] MIN. NICKEL UNDERPLATED OVERALL.
   - 2.2 SHELL: 0.508um [20u"] MIN. NICKEL PLATED.
   - 2.3 LED: 1.02um [40u"] COPPER UNDERPLATED OVERALL.
     1.27um [50u"] NICKEL OVERALL.
     1.27um [50u"] SILVER ON BONDING AREA.
     2.54um [100u"] BRIGHT–TIN ON SOLDER AREA.
3. LED MUST BE REFLOW COMPATIBLE TO FOLLOWING TEMPERATURE PROFILE (FOR 1 CYCLE): ABOVE 160°C FOR 120 SECONDS, PEAKING AT 220°C FOR 10 SECONDS.
4. LED DEFECT RATE IS 6000 PPM MAX. AFTER IR REFLOW PROCESS AS NOTE 3.
5. WAVE SOLDER CAPABLE TO 265°C PER TE SPEC 109–202, CONDITION B.
6. OBSOLETE PARTS: OBSOLETE CIS STREAMLINING PER D.RENAUD/D.SINISI.

| | | | | | |
|---|---|---|---|---|---|
| 6 OBSOLETE | TRAY | GREEN | ORANGE/ GREEN | 1.27um[50u"] | ~~4–1734324–4~~ |
| | | | | 0.762um[30u"] | 4–1734324–3 |
| 6 OBSOLETE | | | | 0.381um[15u"] | ~~4–1734324–2~~ |
| | | | | 0.152um[6u"] | ~~4–1734324–1~~ |
| | PACKAGE | POSITION 2 | POSITION 1 | MIN. GOLD THICKNESS | PART NUMBER |
| | | INDICATOR COLOR | | | |

THIS DRAWING IS A CONTROLLED DOCUMENT.

DIMENSIONS: mm

TOLERANCES UNLESS OTHERWISE SPECIFIED:

| | |
|---|---|
| 0 PLC | ± – |
| 1 PLC | ± 0.3 |
| 2 PLC | ± 0.2 |
| 3 PLC | ± 0.15 |
| 4 PLC | ± – |
| ANGLES | ± 3° |

MATERIAL –

FINISH –

DWN –
CHK –
APVD –
PRODUCT SPEC –
APPLICATION SPEC –
WEIGHT –

TE Connectivity

NAME
MODULAR JACK CONNECTOR
RJ45 WITH LED, 8P8C, SHIELDED
TAB DOWN, DIP TYPE, H=11.3mm

| SIZE | CAGE CODE | DRAWING NO | RESTRICTED TO |
|---|---|---|---|
| A3 | 00779 | C–1734324 | — |

CUSTOMER DRAWING | SCALE — | SHEET 3 OF 7 | REV A4

1470–19 (1/08)

THIS DRAWING IS UNPUBLISHED. RELEASED FOR PUBLICATION -,- .
© COPYRIGHT 2010 BY TYCO ELECTRONICS CORPORATION. ALL RIGHTS RESERVED.

| LOC | DIST |
|---|---|
| DW | — |

REVISIONS

| P | LTR | DESCRIPTION | DATE | DWN | APVD |
|---|---|---|---|---|---|
| | | SEE SHEET 1. | | | |

| LED SCHEMATIC | |
|---|---|
| LED 2 | LED 1 |
| 9+ ▷\| −10 | 11+ ▷\| −12 |

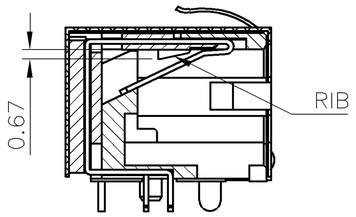


SECTION A–A

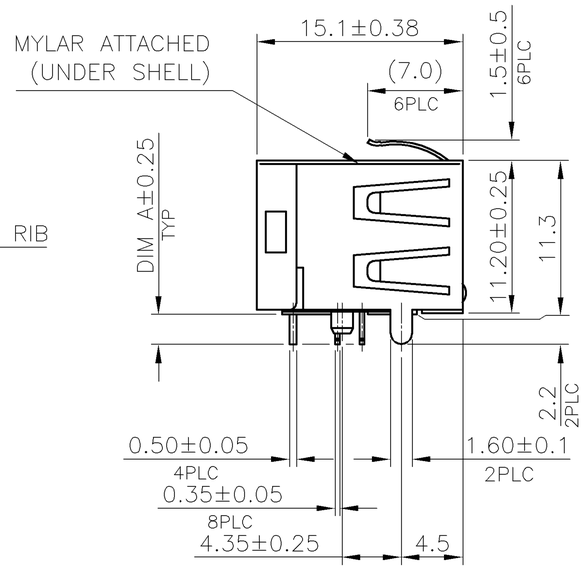


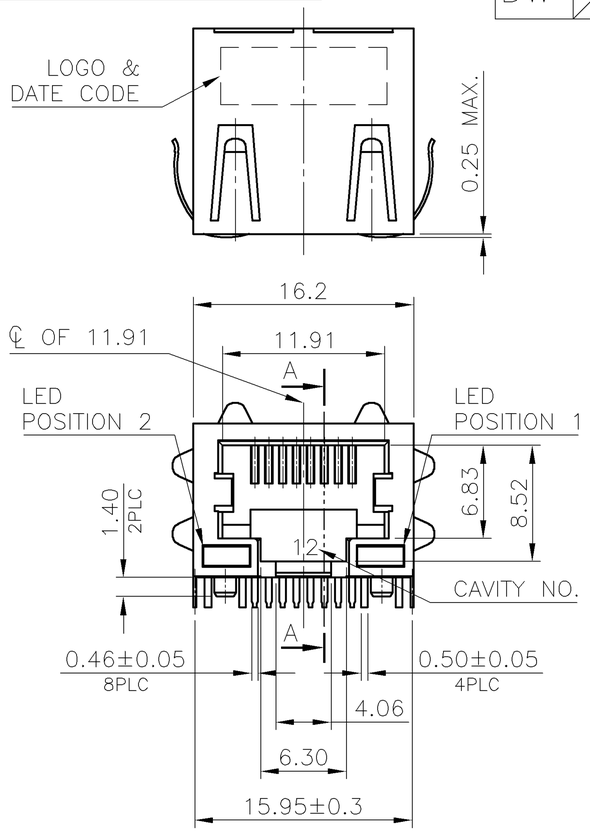


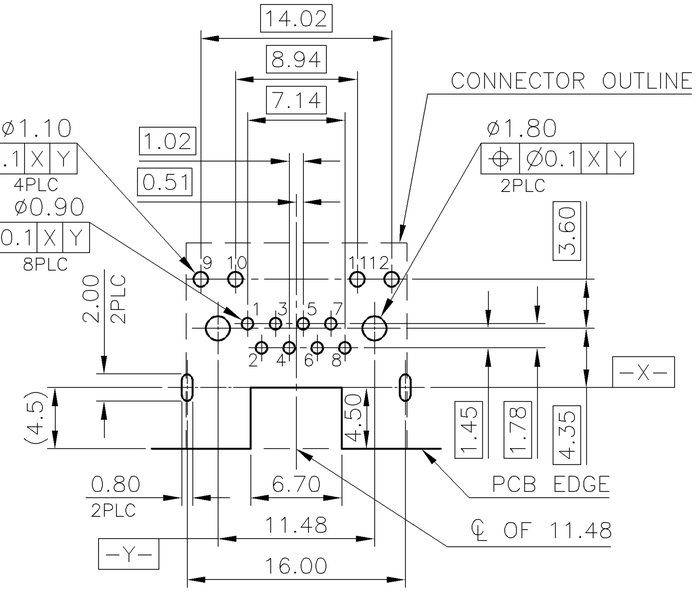


RECOMMENDED PCB LAYOUT (TOP VIEW)
TOLERANCE: ±0.05

| RECOMMENDED PCB THICKNESS | DIM A |
|---|---|
| 1.6 | 2.2 |
| 2.0 | 3.5 |

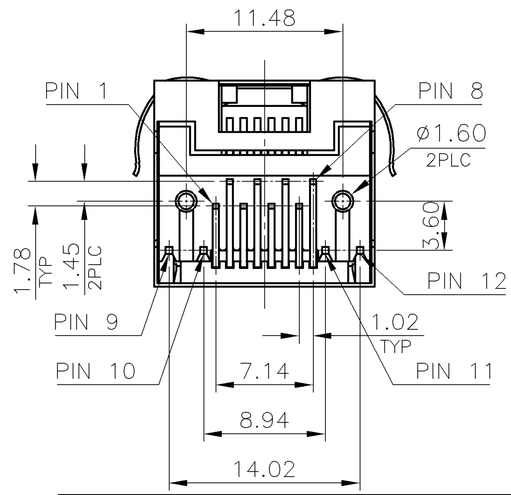


NOTE:

1. MATERIAL:
   - 1.1 HOUSING: PA46, WITH 30% GF, UL94 V–0, BLACK COLOR.
   - 1.2 INSERT HOUSING: PA46, WITH 30% GF, UL94 V–0, BLACK COLOR.
   - 1.3 CONTACTS: PHOSPHOR BRONZE.
   - 1.4 SHELL: BRASS.
   - 1.5 LED SOLDER TAIL: STEEL.
   - 1.6 MYLAR: SILICONE POLYMER.
2. FINISH:
   - 2.1 CONTACTS: (SEE TABLE) GOLD PLATED ON CONTACT AREA.
     GOLD FLASH ON SOLDER TAIL.
     1.27um [50u”] MIN. NICKEL UNDERPLATED OVERALL.
   - 2.2 SHELL: 0.508um [20u”] MIN. NICKEL PLATED.
   - 2.3 LED: 1.02um [40u”] COPPER UNDERPLATED OVERALL.
     1.27um [50u”] NICKEL OVERALL.
     1.27um [50u”] SILVER ON BONDING AREA.
     2.54um [100u”] BRIGHT–TIN ON SOLDER AREA.
3. LED MUST BE REFLOW COMPATIBLE TO FOLLOWING TEMPERATURE PROFILE (FOR 1 CYCLE): ABOVE 160°C FOR 120 SECONDS, PEAKING AT 220°C FOR 10 SECONDS.
4. LED DEFECT RATE IS 6000 PPM MAX. AFTER IR REFLOW PROCESS AS NOTE 3.
5. WAVE SOLDER CAPABLE TO 265°C PER TE SPEC 109–202, CONDITION B.

6. OBSOLETE PARTS: OBSOLETE CIS STREAMLINING PER D.RENAUD/D.SINISI.

| PACKAGE | DIM A | POSITION 2 | POSITION 1 | MIN. GOLD THICKNESS | PART NUMBER |
|---|---|---|---|---|---|
| | | INDICATOR COLOR | | | |
| TRAY | 3.5 | GREEN | YELLOW | 0.762um[30u”] | 5–1734324–9 |
| TRAY | 2.2 | YELLOW | GREEN | 1.27um[50u”] | ~~5–1734324–8~~ |
| | | | | 0.762um[30u”] | ~~5–1734324–7~~ |
| | | | | 0.381um[15u”] | ~~5–1734324–6~~ |
| | | | | 0.152um[6u”] | ~~5–1734324–5~~ |
| | | GREEN | YELLOW | 1.27um[50u”] | ~~5–1734324–4~~ |
| | | | | 0.762um[30u”] | 5–1734324–3 |
| | | | | 0.381um[15u”] | ~~5–1734324–2~~ |
| | | | | 0.152um[6u”] | 5–1734324–1 |

6 OBSOLETE

6 OBSOLETE

THIS DRAWING IS A CONTROLLED DOCUMENT.

DIMENSIONS: mm

TOLERANCES UNLESS OTHERWISE SPECIFIED:

| | |
|---|---|
| 0 PLC | ± – |
| 1 PLC | ± 0.3 |
| 2 PLC | ± 0.2 |
| 3 PLC | ± 0.15 |
| 4 PLC | ± – |
| ANGLES | ± 3° |

MATERIAL –

FINISH –

DWN –
CHK –
APVD –
PRODUCT SPEC –
APPLICATION SPEC –
WEIGHT –

TE Connectivity

NAME

MODULAR JACK CONNECTOR
RJ45 WITH LED, 8P8C, SHIELDED
TAB DOWN, DIP TYPE, H=11.3mm

| SIZE | CAGE CODE | DRAWING NO | RESTRICTED TO |
|---|---|---|---|
| A3 | 00779 | C–1734324 | — |

CUSTOMER DRAWING | SCALE — | SHEET 4 OF 7 | REV A4

THIS DRAWING IS UNPUBLISHED. RELEASED FOR PUBLICATION -,- .
© COPYRIGHT 2010 BY TYCO ELECTRONICS CORPORATION. ALL RIGHTS RESERVED.

| LOC | DIST |
|---|---|
| DW | — |

REVISIONS

| P | LTR | DESCRIPTION | DATE | DWN | APVD |
|---|---|---|---|---|---|
| | | SEE SHEET 1. | | | |

| LED SCHEMATIC | |
|---|---|
| LED 2 | LED 1 |
| GREEN<br>9 + − 10<br>− + ORANGE | 11 + − 12 |

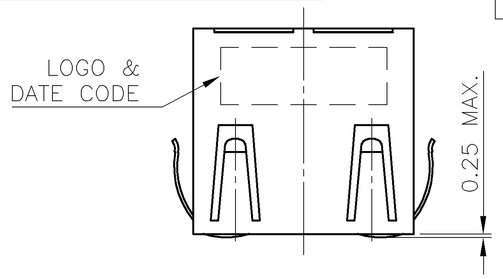


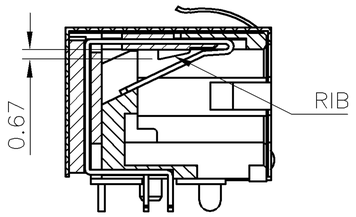


SECTION A–A

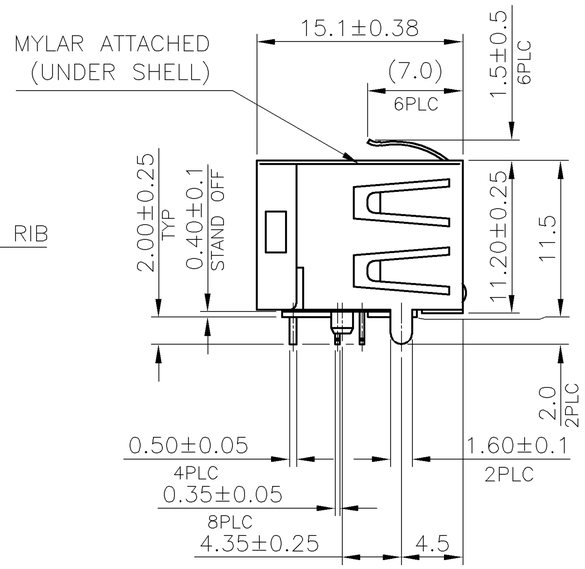


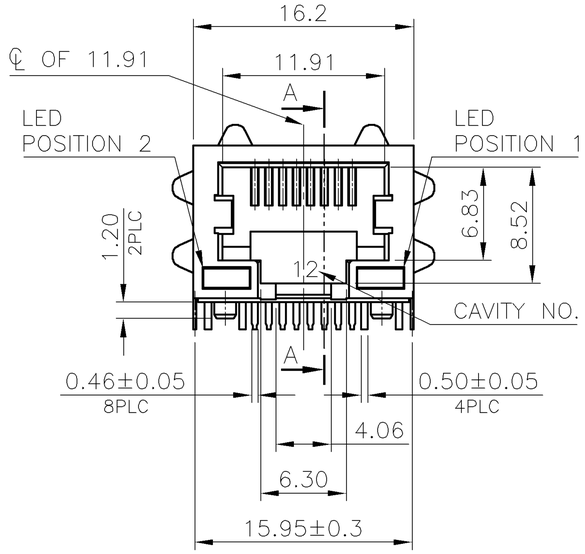


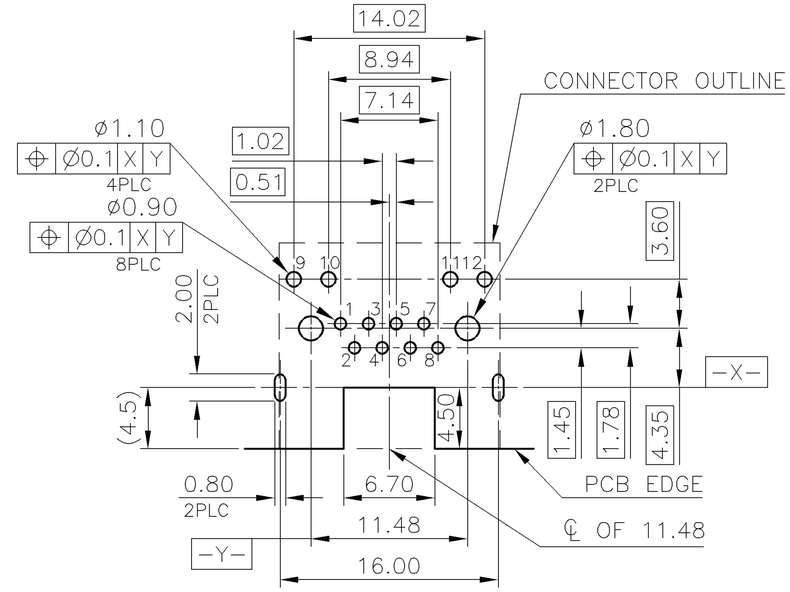


RECOMMENDED PCB LAYOUT (TOP VIEW)
PCB THICKNESS: 1.6mm, TOLERANCE: ±0.05

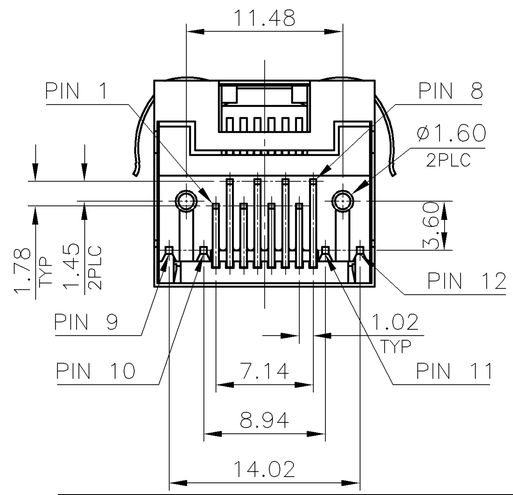


NOTE:

1. MATERIAL:
   - 1.1 HOUSING: PA9T, WITH 30% GF, UL94 V–0, BLACK COLOR.
   - 1.2 INSERT HOUSING: PA46, WITH 30% GF, UL94 V–0, BLACK COLOR.
   - 1.3 CONTACTS: PHOSPHOR BRONZE.
   - 1.4 SHELL: BRASS.
   - 1.5 LED SOLDER TAIL: STEEL.
   - 1.6 MYLAR: SILICONE POLYMER.
2. FINISH:
   - 2.1 CONTACTS: (SEE TABLE) GOLD PLATED ON CONTACT AREA.
     GOLD FLASH ON SOLDER TAIL.
     1.27um [50u"] MIN. NICKEL UNDERPLATED OVERALL.
   - 2.2 SHELL: 0.508um [20u"] MIN. NICKEL PLATED.
   - 2.3 LED: 1.02um [40u"] COPPER UNDERPLATED OVERALL.
     1.27um [50u"] NICKEL OVERALL.
     1.27um [50u"] SILVER ON BONDING AREA.
     2.54um [100u"] BRIGHT–TIN ON SOLDER AREA.
3. LED MUST BE REFLOW COMPATIBLE TO FOLLOWING TEMPERATURE PROFILE (FOR 1 CYCLE): ABOVE 160°C FOR 120 SECONDS, PEAKING AT 220°C FOR 10 SECONDS.
4. LED DEFECT RATE IS 6000 PPM MAX. AFTER IR REFLOW PROCESS AS NOTE 3.
5. WAVE SOLDER CAPABLE TO 265°C PER TE SPEC 109–202, CONDITION B.

| PACKAGE | POSITION 2 | POSITION 1 | MIN. GOLD THICKNESS | PART NUMBER |
|---|---|---|---|---|
| | INDICATOR COLOR | | | |
| TAPE & REEL | GREEN/ ORANGE | YELLOW | 1.27um[50u"] | 6–1734324–8 |
| | | | 0.762um[30u"] | 6–1734324–7 |
| | | | 0.381um[15u"] | 6–1734324–6 |
| | | | 0.152um[6u"] | 6–1734324–5 |
| TRAY | | | 1.27um[50u"] | 6–1734324–4 |
| | | | 0.762um[30u"] | 6–1734324–3 |
| | | | 0.381um[15u"] | 6–1734324–2 |
| | | | 0.152um[6u"] | 6–1734324–1 |

THIS DRAWING IS A CONTROLLED DOCUMENT.

DIMENSIONS: mm

TOLERANCES UNLESS OTHERWISE SPECIFIED:

| | |
|---|---|
| 0 PLC | ± – |
| 1 PLC | ± 0.3 |
| 2 PLC | ± 0.2 |
| 3 PLC | ± 0.15 |
| 4 PLC | ± – |
| ANGLES | ± 3° |

MATERIAL –

FINISH –

DWN –
CHK –
APVD –
PRODUCT SPEC –
APPLICATION SPEC –
WEIGHT –

TE Connectivity

NAME
MODULAR JACK CONNECTOR
RJ45 WITH LED, 8P8C, SHIELDED
TAB DOWN, DIP TYPE, H=11.3mm

| SIZE | CAGE CODE | DRAWING NO | RESTRICTED TO |
|---|---|---|---|
| A3 | 00779 | C–1734324 | — |

CUSTOMER DRAWING | SCALE — | SHEET 5 OF 7 | REV A4

1470–19 (1/08)

THIS DRAWING IS UNPUBLISHED. RELEASED FOR PUBLICATION – , – .
© COPYRIGHT 2010 BY TYCO ELECTRONICS CORPORATION. ALL RIGHTS RESERVED.

| LOC | DIST |
|---|---|
| DW | — |

REVISIONS

| P | LTR | DESCRIPTION | DATE | DWN | APVD |
|---|---|---|---|---|---|
| | | SEE SHEET 1. | | | |

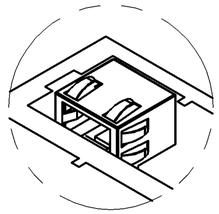

DETAIL C

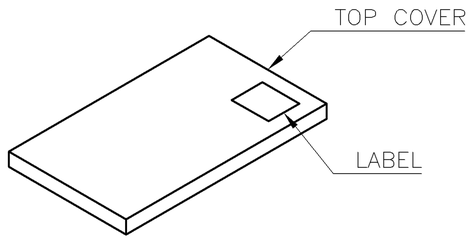


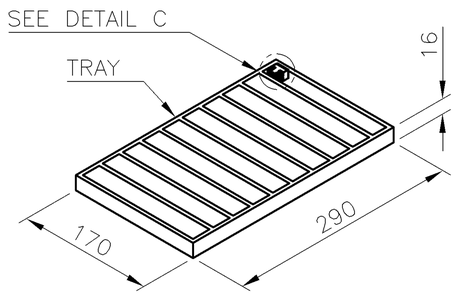


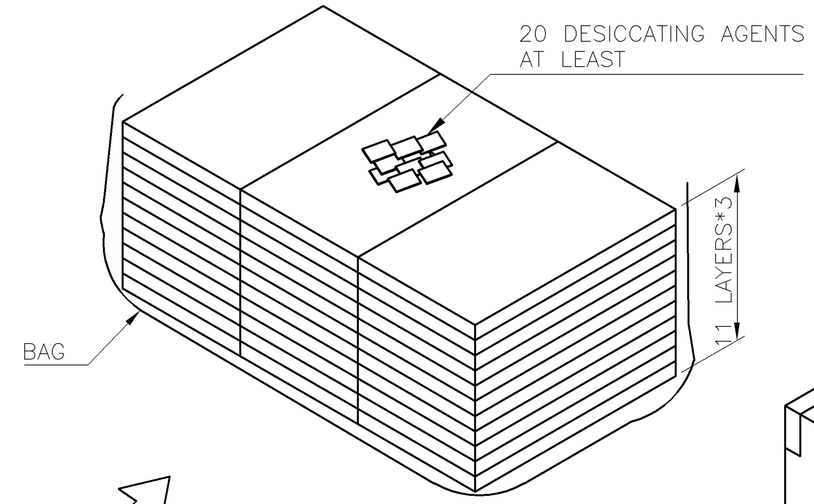


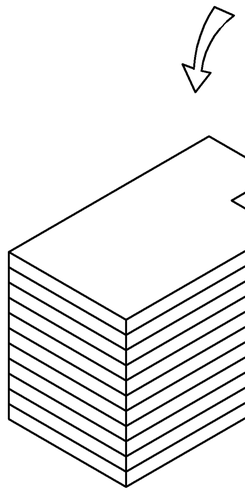

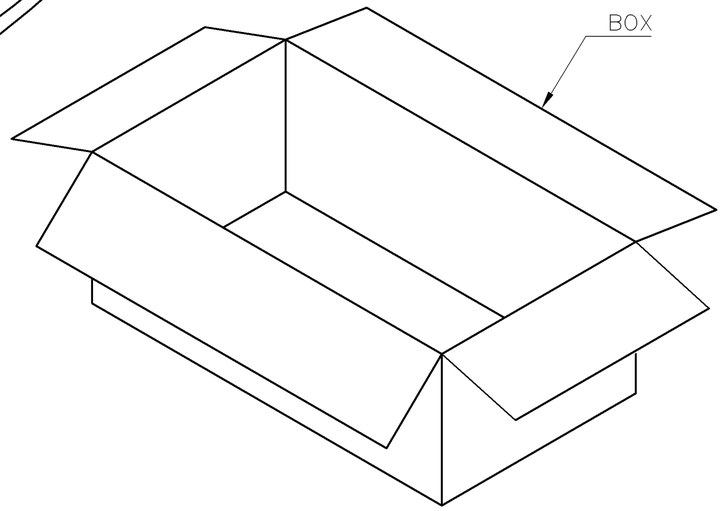


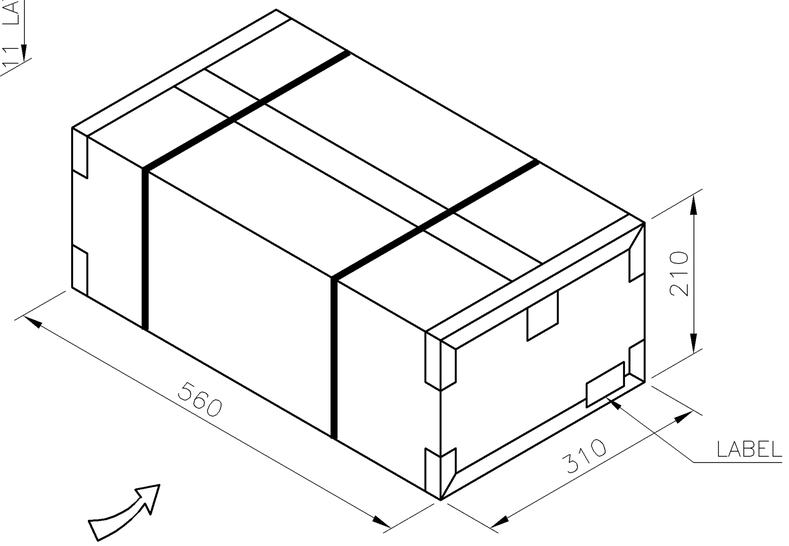


| GROSS WEIGHT | NET WEIGHT | PCS /TRAY | TRAY /BOX | PCS /BOX | PART NUMBER |
|---|---|---|---|---|---|
| 13Kg | 11.1Kg | 80 | 33 | 2640 | 6–1734324–1~4 |
| | | | | | 5–1734324–X |
| 14.5Kg | 12.5Kg | 90 | | | 7–1734324–X |
| | | | | | 4–1734324–X |
| | | | | | 2–1734324–X |
| | | | | | 1734324–X |

NOTES:
1. MATERIAL:
   TRAY: PVC.
   BOX: CORRUGATED FIBER.
2. DIMENSION: SEE DRAWING
3. QUANTITY: SEE TABLE
4. WEIGHT: SEE TABLE

THIS DRAWING IS A CONTROLLED DOCUMENT.

DIMENSIONS: mm

TOLERANCES UNLESS OTHERWISE SPECIFIED:

| | |
|---|---|
| 0 PLC | ± – |
| 1 PLC | ± 0.3 |
| 2 PLC | ± 0.2 |
| 3 PLC | ± 0.15 |
| 4 PLC | ± – |
| ANGLES | ± 3° |

MATERIAL –

FINISH –

DWN –
CHK –
APVD –
PRODUCT SPEC –
APPLICATION SPEC –
WEIGHT –

TE Connectivity

NAME
MODULAR JACK CONNECTOR
RJ45 WITH LED, 8P8C, SHIELDED
TAB DOWN, DIP TYPE, H=11.3mm

| SIZE | CAGE CODE | DRAWING NO | RESTRICTED TO |
|---|---|---|---|
| A3 | 00779 | C–1734324 | — |

CUSTOMER DRAWING | SCALE — | SHEET 6 OF 7 | REV A4

THIS DRAWING IS UNPUBLISHED. RELEASED FOR PUBLICATION -,- .
© COPYRIGHT 2010 BY TYCO ELECTRONICS CORPORATION. ALL RIGHTS RESERVED.

| LOC | DIST |
|---|---|
| DW | — |

REVISIONS

| P | LTR | DESCRIPTION | DATE | DWN | APVD |
|---|---|---|---|---|---|
| | | SEE SHEET 1. | | | |

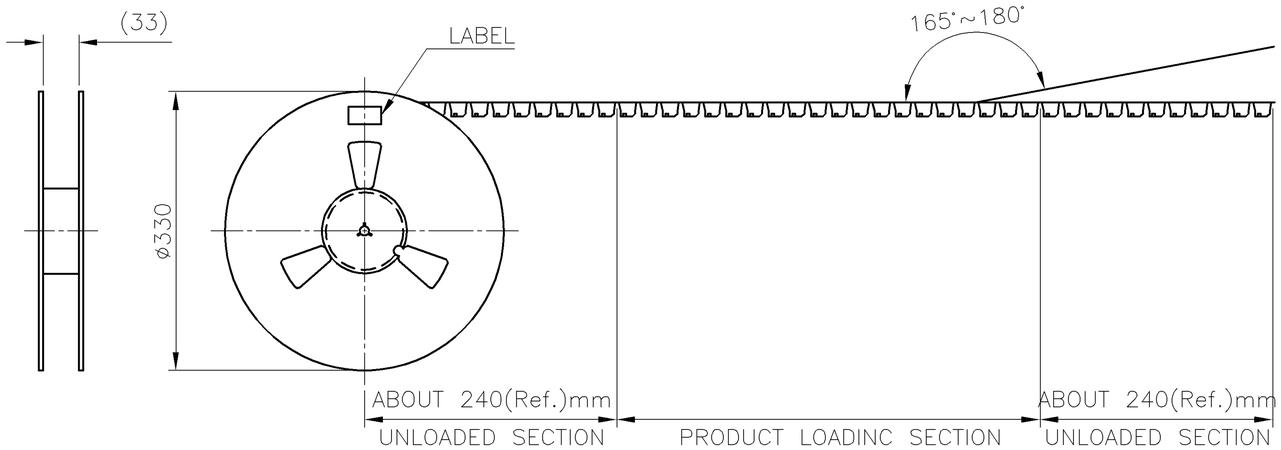


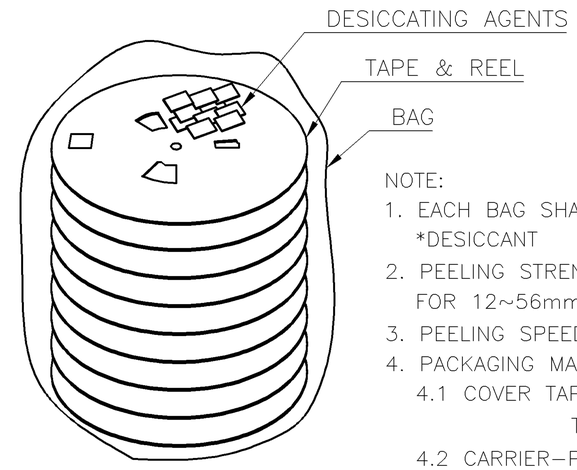


NOTE:
1. EACH BAG SHALL BE INCLUDED:
   *DESICCANT
2. PEELING STRENGTH: 0.1~1.3N(1~130 GRAMS) FOR 12~56mm WIDE CARRIER TAPES
3. PEELING SPEED: 300mm/MINUTES.
4. PACKAGING MATERIAL:
   4.1 COVER TAPE–COMPOSITE OF POLYETHYLENE TEREPHTHALATE (PET)
   4.2 CARRIER–POLYSTYRENE (PS)
   4.3 CARRIER REEL–POLYSTYRENE

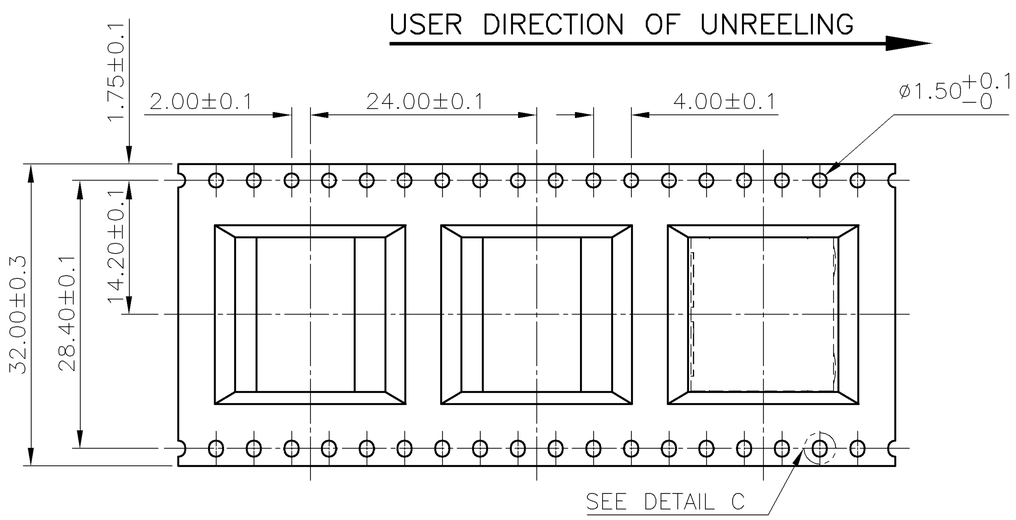


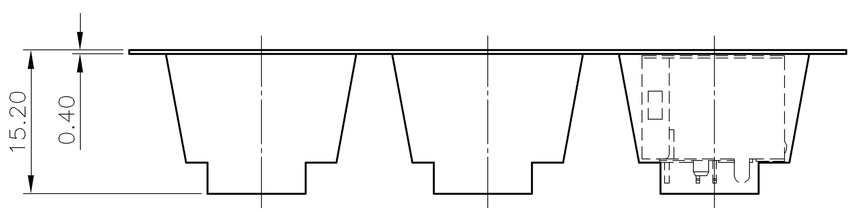


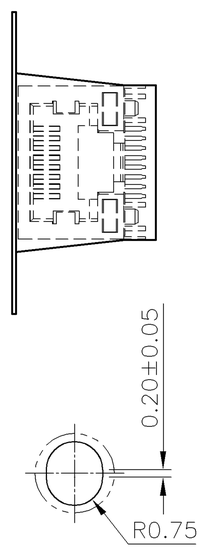


DETAIL C
SCALE 4:1

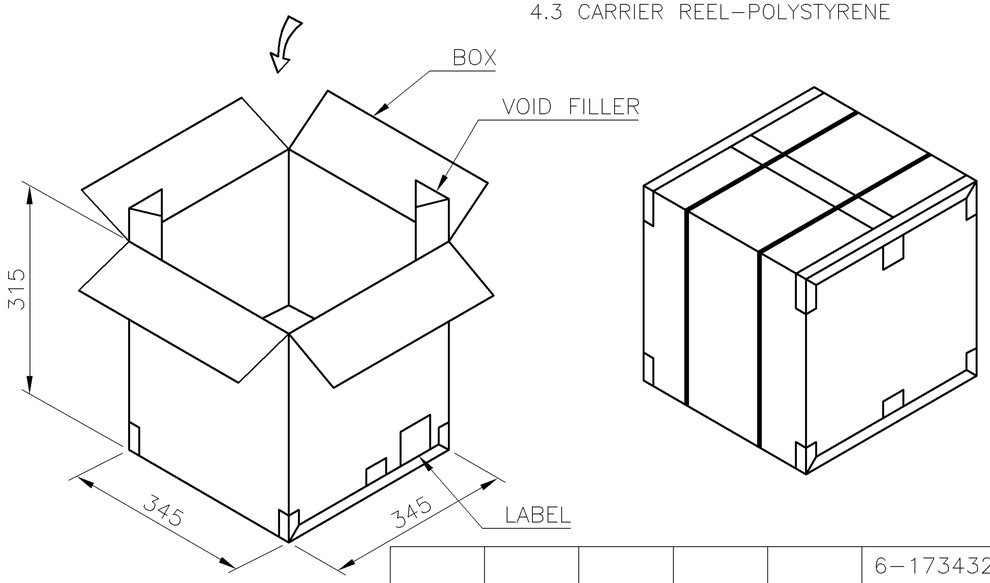


| GROSS WEIGHT | NET WEIGHT | PCS /REEL | REEL /BOX | PCS /BOX | PART NUMBER |
|---|---|---|---|---|---|
| 8.5KG | 6.1KG | 180 | 8 | 1440 | 6–1734324–5~8 |
| | | | | | 3–1734324–X |
| | | | | | 1–1734324–X |

THIS DRAWING IS A CONTROLLED DOCUMENT.

DIMENSIONS: mm

TOLERANCES UNLESS OTHERWISE SPECIFIED:

| | |
|---|---|
| 0 PLC | ± – |
| 1 PLC | ± 0.3 |
| 2 PLC | ± 0.2 |
| 3 PLC | ± 0.15 |
| 4 PLC | ± – |
| ANGLES | ± 3° |

MATERIAL –

FINISH –

DWN –
CHK –
APVD –
PRODUCT SPEC –
APPLICATION SPEC –
WEIGHT –

TE Connectivity

NAME
MODULAR JACK CONNECTOR
RJ45 WITH LED, 8P8C, SHIELDED
TAB DOWN, DIP TYPE, H=11.3mm

| SIZE | CAGE CODE | DRAWING NO | RESTRICTED TO |
|---|---|---|---|
| A3 | 00779 | C–1734324 | — |

CUSTOMER DRAWING | SCALE — | SHEET 7 OF 7 | REV A4

Компания «ЭлектроПласт» предлагает заключение долгосрочных отношений при поставках импортных электронных компонентов на взаимовыгодных условиях!

Наши преимущества:

- Оперативные поставки широкого спектра электронных компонентов отечественного и импортного производства напрямую от производителей и с крупнейших мировых складов;
- Поставка более 17-ти миллионов наименований электронных компонентов;
- Поставка сложных, дефицитных, либо снятых с производства позиций;
- Оперативные сроки поставки под заказ (от 5 рабочих дней);
- Экспресс доставка в любую точку России;
- Техническая поддержка проекта, помощь в подборе аналогов, поставка прототипов;
- Система менеджмента качества сертифицирована по Международному стандарту ISO 9001;
- Лицензия ФСБ на осуществление работ с использованием сведений, составляющих государственную тайну;
- Поставка специализированных компонентов (Xilinx, Altera, Analog Devices, Intersil, Interpoint, Microsemi, Aeroflex, Peregrine, Syfer, Eurofarad, Texas Instrument, Miteq, Cobham, E2V, MA-COM, Hittite, Mini-Circuits,General Dynamics и др.);

Помимо этого, одним из направлений компании «ЭлектроПласт» является направление «Источники питания». Мы предлагаем Вам помощь Конструкторского отдела:

- Подбор оптимального решения, техническое обоснование при выборе компонента;
- Подбор аналогов;
- Консультации по применению компонента;
- Поставка образцов и прототипов;
- Техническая поддержка проекта;
- Защита от снятия компонента с производства.

**Как с нами связаться**

**Телефон:** 8 (812) 309 58 32 (многоканальный)
**Факс:** 8 (812) 320-02-42
**Электронная почта:** org@eplast1.ru
**Адрес:** 198099, г. Санкт-Петербург, ул. Калинина, дом 2, корпус 4, литера А.