Superior Efficacy and Lumen output with Small Form Factor

Z Power LED – Z5-M1

SZ5-M1-WX-XX (Cool, Neutral, Warm)

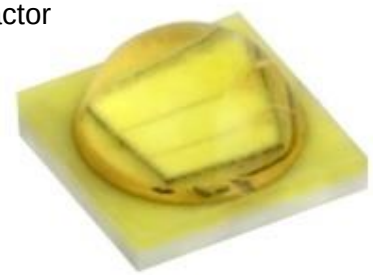

RoHS

MacAdam 3-Step

Product Brief

Description

- The Z-Power series is designed for high flux output applications with high current operation capability.
- It incorporates state of the art SMD design and low thermal resistant material.
- The Z Power LED is ideal light sources for directional lighting applications such as Spot Lights, various outdoor applications, automotive lightings and high performance torches .

Features and Benefits

- High Lumen Output and Efficacy
- Designed for high current operation
- Low Thermal Resistance
- Wide CCT range 3000~8200K
- High Color Quality, CRI Min. 80
- ANSI compliant Binning
- MacAdam 3 Step for Warm White

Key Applications

- Indoor lighting
- Outdoor lighting
- Architectural lighting
- Industrial lighting (High/Low bay)
- Portable Torch
- Home appliance

Table 1. Product Selection Table

Part Number	CCT				CRI
	Color	Min.	Typ.	Max.	Min
SZ5-M1-W0-00	Cool White	4700K	5300K	7000K	70
SZ5-M1-W0-C8	Cool White	4700K	5300K	7000K	75
SZ5-M1-WN-00	Neutral White	3700K	4000K	4700K	70
SZ5-M1-WN-C8	Neutral White	3700K	4000K	4700K	80
SZ5-M1-WW-00	Warm White	2600K	3000K	3200K	68
SZ5-M1-WW-C8	Warm White	2600K	3000K	3700K	80
SZ5-M1-WW-C9	Warm White	2600K	3000K	3200K	90

Table of Contents

Index

•	Product Brief	1
•	Table of Contents	2
•	Product Performance	3
•	Characteristics Graph	5
•	Color Bin Structure	11
•	Mechanical Dimensions	16
•	Packaging Information	17
•	Product Nomenclature	18
•	Recommended Solder Pad	19
•	Reflow Soldering Characteristics	20
•	Handling of Silicone Resin for LEDs	21
•	Precaution For Use	22
•	Company Information	25

Performance Characteristics

Table 2. Electro Optical Characteristics, T_j=25ºC, RH30%

Part Number	CCT (K) [1]	Typical Luminous Flux [2] Φ_V [3] (lm)			Typical Forward Voltage (V_F) [4]			CRI [5], R_a	Viewing Angle (degrees) 2Θ ½
	Typ.	350mA	700mA*	1.2A*	350mA	700mA*	1.2A*	Min.	Typ.
SZ5-M1-W0-00	5300	158	285	433	2.95	3.14	3.33	70	118
SZ5-M1-W0-C8	5300	150	271	411	2.95	3.14	3.33	75	118
SZ5-M1-WN-00	4000	156	276	415	2.95	3.14	3.33	70	118
SZ5-M1-WN-C8	4000	142	253	382	2.95	3.14	3.33	80	118
SZ5-M1-WW-00	3000	148	265	403	2.95	3.14	3.33	68	118
SZ5-M1-WW-C8	3000	128	231	353	2.95	3.14	3.33	80	118
SZ5-M1-WW-C9	3000	105	188	286	2.95	3.14	3.33	90	118

Table 3. Electro Optical Characteristics, T_j=85ºC

Part Number	CCT (K) [1]	Typical Luminous Flux [2] Φ_V [3] (lm)			Typical Forward Voltage (V_F) [4]		
	Typ.	350mA	700mA*	1.2A*	350mA	700mA*	1.2A*
SZ5-M1-W0-00	5300	142	258	393	2.78	2.96	3.14
SZ5-M1-W0-C8	5300	135	245	373	2.78	2.96	3.14
SZ5-M1-WN-00	4000	137	250	380	2.78	2.96	3.14
SZ5-M1-WN-C8	4000	126	229	349	2.78	2.96	3.14
SZ5-M1-WW-00	3000	141	239	364	2.78	2.96	3.14
SZ5-M1-WW-C8	3000	117	210	322	2.78	2.96	3.14
SZ5-M1-WW-C9	3000	95	153	232	2.78	2.96	3.14

Notes :

(1) Correlated Color Temperature is derived from the CIE 1931 Chromaticity diagram. Color coordinate : ±0.005, CCT ±5% tolerance.

(2) Seoul Semiconductor maintains a tolerance of ±7% on flux and power measurements.

(3) Φ_V is the total luminous flux output as measured with an integrating sphere.

(4) Tolerance is ±0.06V on forward voltage measurements.

(5) Tolerance is ±2.0 on CRI measurements.

* No values are provided by real measurement. Only for reference purpose

Performance Characteristics

Table 4. Characteristics

Parameter	Symbol	Value			Unit
		Min.	Typ.	Max.	
Forward Current [1]	I_F	-	-	1500	mA
Peak Pulsed Forward Current [2]	I_F			2000	mA
Reverse Voltage	V_R	-	-	5	V
Power Dissipation	P_d	-	-	5.22	W
Junction Temperature	T_j	-	-	150	ºC
Operating Temperature	T_{opr}	- 40	-	125	ºC
Storage Temperature	T_{stg}	- 40	-	125	ºC
Thermal resistance (J to S) [3]	$R\theta_{J-S}$	-	4.5	-	K/W
ESD Sensitivity(HBM) [4]	Class 3A JESD22-A114-E				

Notes :

(1) At Junction Temperature 25℃ condition.

(2) Pulse width ≤10ms, duty cycle ≤ 10% condition.

(3) $R\theta_{J-S}$ is tested at 350mA.

(4) The zener diode is included to protect the product from ESD.

- Thermal resistance can be increased substantially depending on the heat sink design/operating condition, and the maximum possible driving current will decrease accordingly.

Characteristics Graph

Fig 1. Color Spectrum, T_j=25ºC

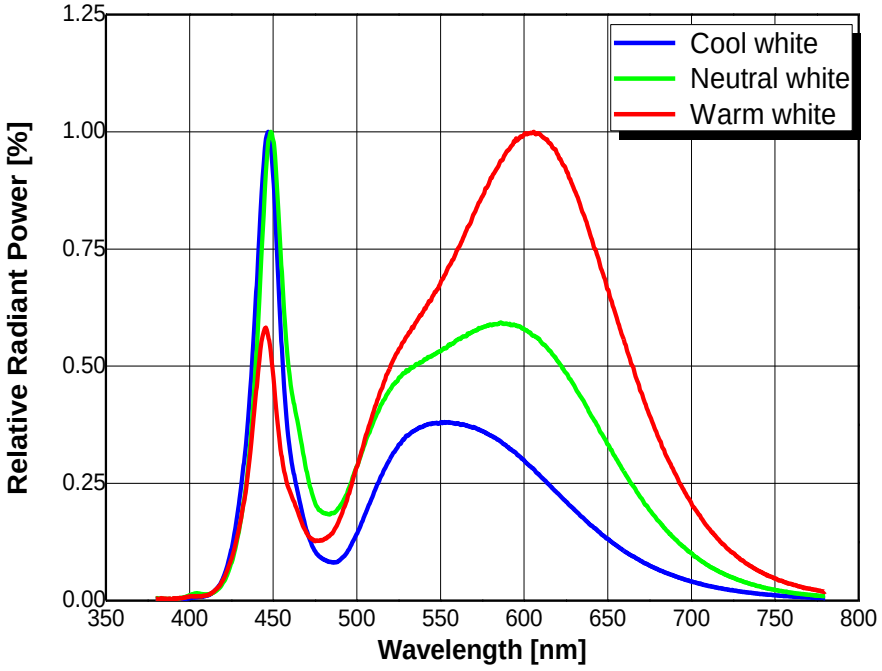

Fig 2. Typical Spatial Distribution

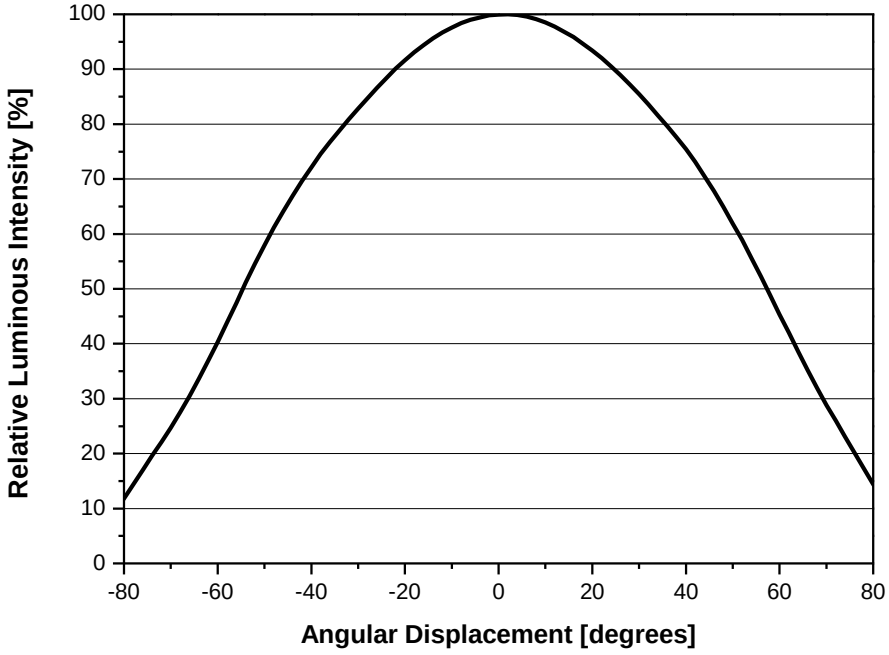

Characteristics Graph

Fig 3. Forward Voltage vs. Forward Current, T_j=25℃

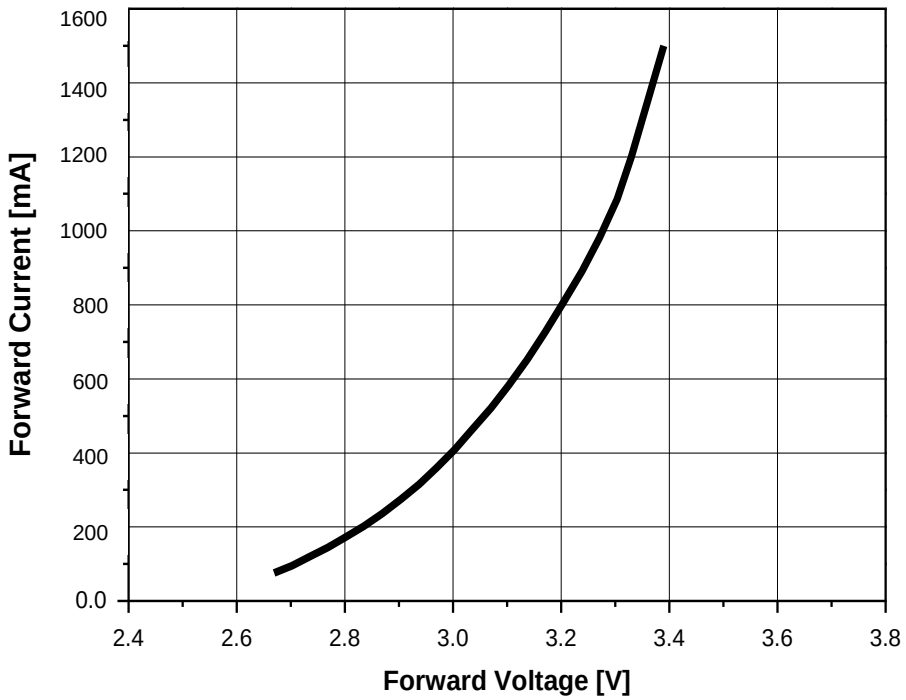

Fig 4. Forward Current vs. Relative Luminous Flux, T_j=25℃

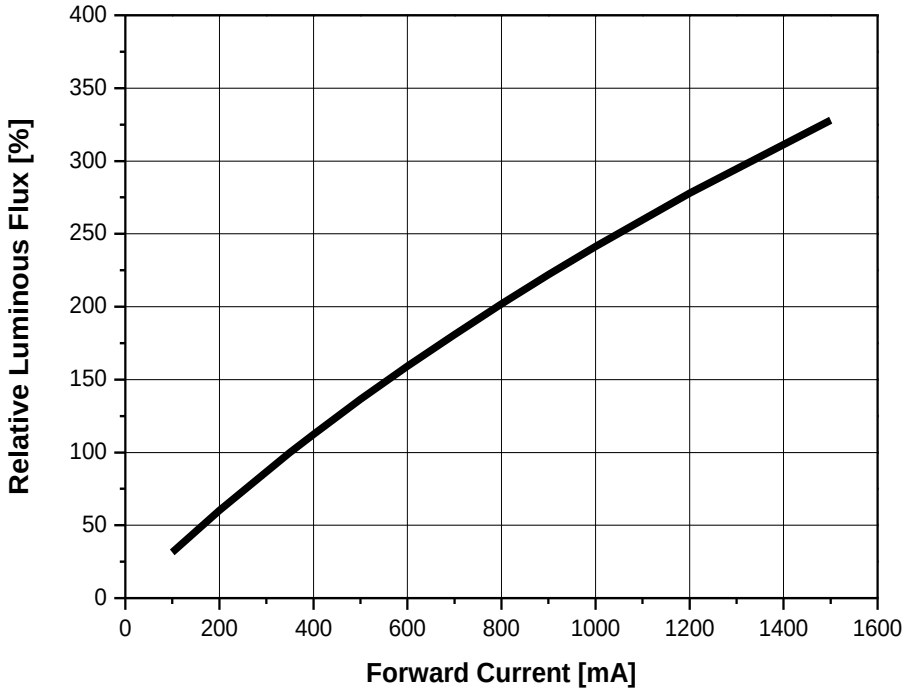

Characteristics Graph

Fig 5. Forward Current vs. CIE x, y Shift, T_j=25℃

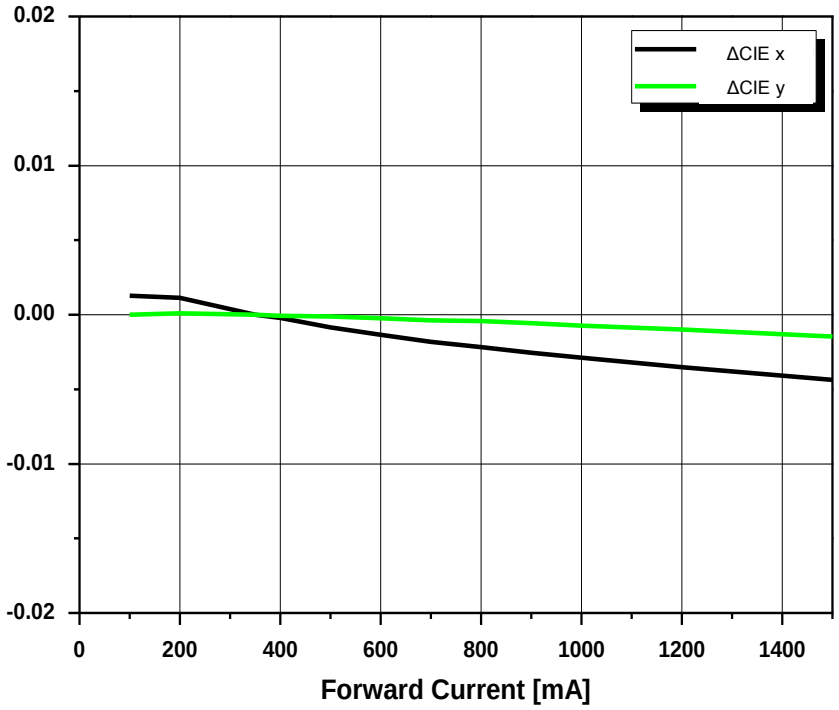

Characteristics Graph

Fig 6. Relative Light Output vs. Junction Temperature, I_F=350mA

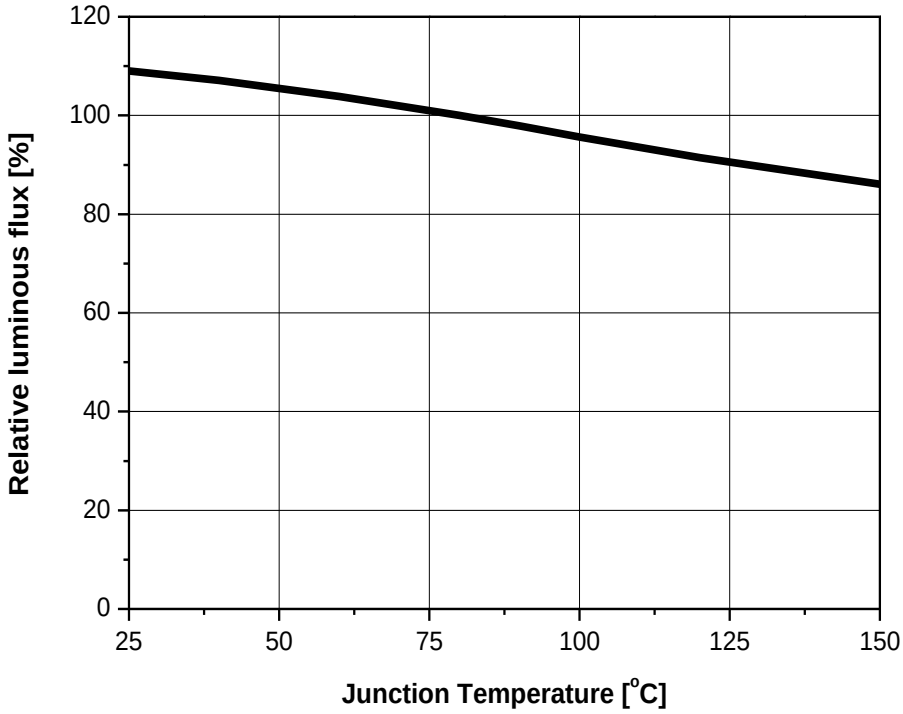

Fig 7. Junction Temp. vs. CIE x, y Shift, I_F=350mA

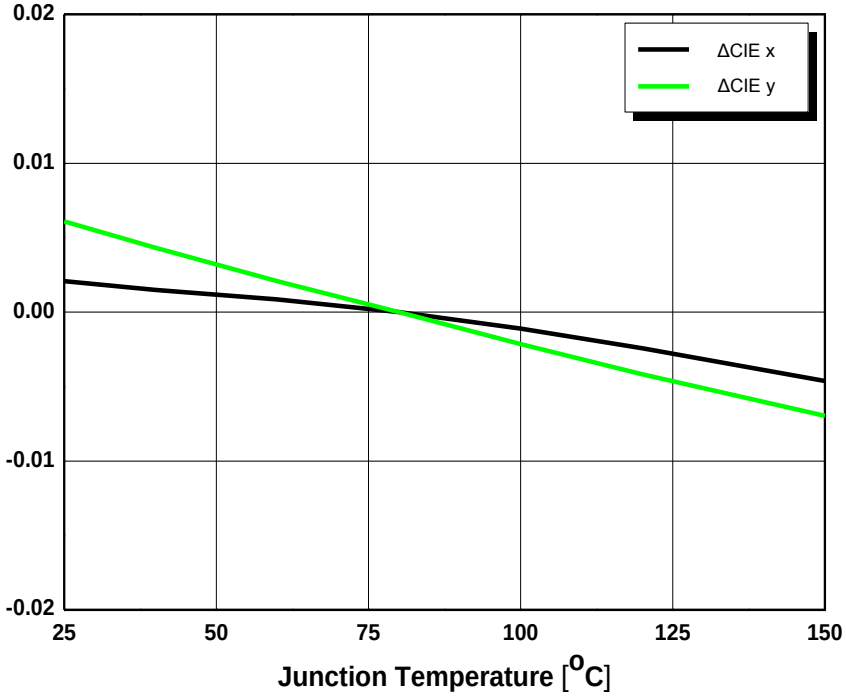

Characteristics Graph

Fig 8. Relative Forward vs. Junction Temperature, I_F=350mA

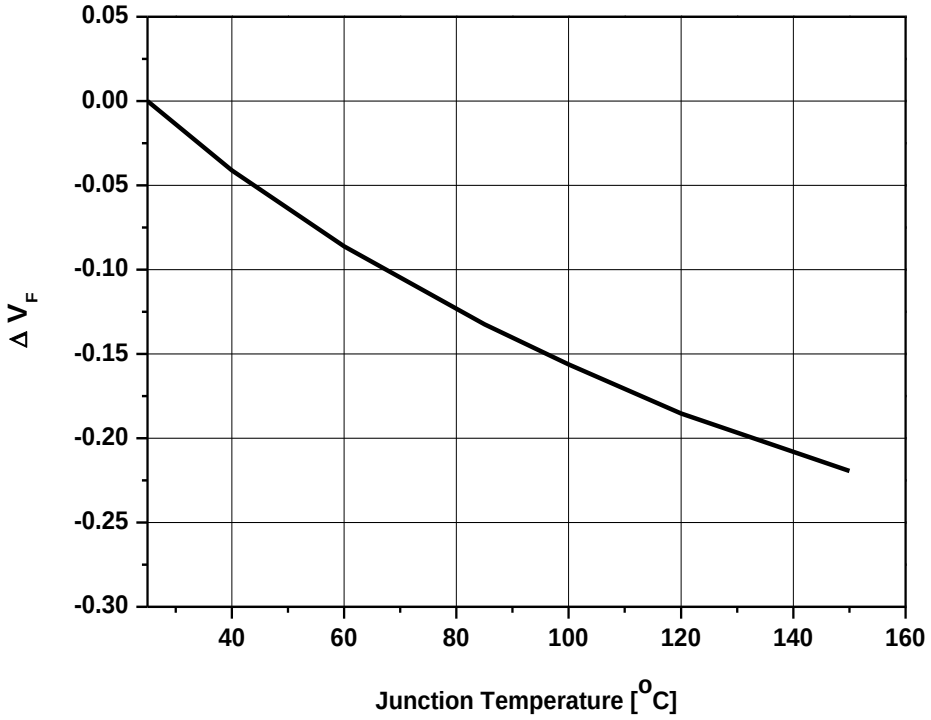

Characteristics Graph

Fig 9. Maximum Forward Current vs. Ambient Temperature, T_j(max.)=150℃, I_F =1500mA

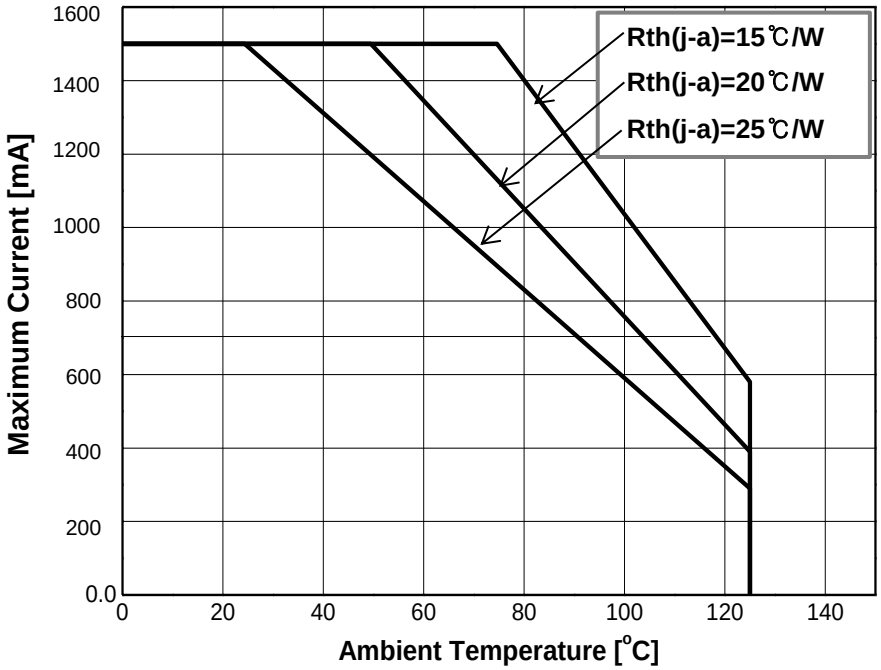

Color Bin Structure

Table 5. Bin Code description, I_F=350mA, T_j=25℃

Part Number	Luminous Flux (lm)			Color Chromaticity Coordinate	Typical Forward Voltage (V_F)		
	Bin Code	Min.	Max.		Bin Code	Min.	Max.
SZ5-M1-W0-00	V2	130	140	Refer to page.13	G	2.75	3.00
	V3	140	150				
	W1	150	160		H	3.00	3.25
	W2	160	170		I	3.25	3.50
	W3	170	180				
SZ5-M1-W0-C8	V2	130	140	Refer to page.13	G	2.75	3.00
	V3	140	150				
	W1	150	160		H	3.00	3.25
	W2	160	170				
SZ5-M1-WN-00	V2	130	140	Refer to page.14	G	2.75	3.00
	V3	140	150		H	3.00	3.25
	W1	150	160		I	3.25	3.50
	W2	160	170				
SZ5-M1-WN-C8	U3	109	118.5	Refer to page.14	G	2.75	3.00
	V1	118.5	130		H	3.00	3.25
	V2	130	140		I	3.25	3.50
	V3	140	150				
SZ5-M1-WW-00	V2	130	140	Refer to page.15	G	2.75	3.00
	V3	140	150		H	3.00	3.25
	W1	150	160		I	3.25	3.50
SZ5-M1-WW-C8	U3	109	118.5	Refer to page.15	G	2.75	3.00
	V1	118.5	130		H	3.00	3.25
	V2	130	140		I	3.25	3.50
	V3	140	150				
SZ5-M1-WW-C9	U1	91	100	Refer to page.15	G	2.75	3.00
	U2	100	109		H	3.00	3.25
	U3	109	118.5		I	3.25	3.50

Color Bin Structure

Table 6. Flux Bin Code description, T_j=85℃

Luminous Flux (lm)				
Bin Code	350mA*		700mA*	
	Min.	Max.	Min.	Max.
U1	84	92	152	167
U2	92	100	167	182
U3	100	109	182	198
V1	109	119	193	205
V2	119	129	205	218
V3	129	138	218	240
W1	138	147	240	256
W2	147	156	256	272
W3	156	165	272	288

Table 7. VF Bin Code description, T_j=85℃

Forward Voltage (V_F)				
Bin Code	350mA*		700mA*	
	Min.	Max.	Min.	Max.
G	2.60	2.82	2.77	3.02
H	2.82	3.06	3.02	3.27
I	3.06	3.30	3.27	3.52

Color Bin Structure

CIE Chromaticity Diagram (Cool white), T_j=25℃, I_F=350mA

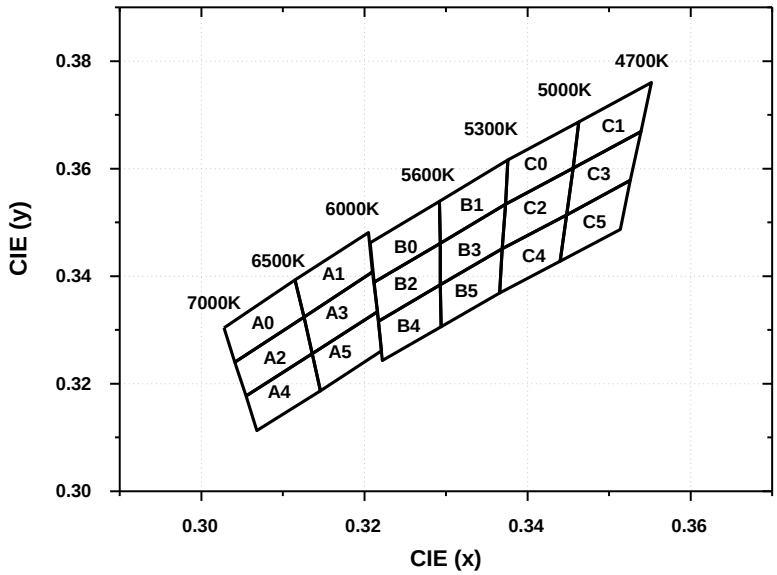

A0		A1		A2		A3		A4	
CIE x	CIE y	CIE x	CIE y	CIE x	CIE y	CIE x	CIE y	CIE x	CIE y
0.3028	0.3304	0.3115	0.3393	0.3041	0.3240	0.3126	0.3324	0.3055	0.3177
0.3041	0.3240	0.3126	0.3324	0.3055	0.3177	0.3136	0.3256	0.3068	0.3113
0.3126	0.3324	0.3210	0.3408	0.3136	0.3256	0.3216	0.3334	0.3146	0.3187
0.3115	0.3393	0.3205	0.3481	0.3126	0.3324	0.3210	0.3408	0.3136	0.3256

A5		B0		B1		B2		B3	
CIE x	CIE y	CIE x	CIE y	CIE x	CIE y	CIE x	CIE y	CIE x	CIE y
0.3136	0.3256	0.3207	0.3462	0.3292	0.3539	0.3212	0.3389	0.3293	0.3461
0.3146	0.3187	0.3212	0.3389	0.3293	0.3461	0.3217	0.3316	0.3293	0.3384
0.3221	0.3261	0.3293	0.3461	0.3373	0.3534	0.3293	0.3384	0.3369	0.3451
0.3216	0.3334	0.3292	0.3539	0.3376	0.3616	0.3293	0.3461	0.3373	0.3534

B4		B5		C0		C1		C2	
CIE x	CIE y	CIE x	CIE y	CIE x	CIE y	CIE x	CIE y	CIE x	CIE y
0.3217	0.3316	0.3293	0.3384	0.3376	0.3616	0.3463	0.3687	0.3373	0.3534
0.3222	0.3243	0.3294	0.3306	0.3373	0.3534	0.3456	0.3601	0.3369	0.3451
0.3294	0.3306	0.3366	0.3369	0.3456	0.3601	0.3539	0.3669	0.3448	0.3514
0.3293	0.3384	0.3369	0.3451	0.3463	0.3687	0.3552	0.3760	0.3456	0.3601

C3		C4		C5	
CIE x	CIE y	CIE x	CIE y	CIE x	CIE y
0.3456	0.3601	0.3369	0.3451	0.3448	0.3514
0.3448	0.3514	0.3366	0.3369	0.3440	0.3428
0.3526	0.3578	0.3440	0.3428	0.3514	0.3487
0.3539	0.3669	0.3448	0.3514	0.3526	0.3578

Color Bin Structure

CIE Chromaticity Diagram (Neutral white), T_j=25℃, I_F=350mA

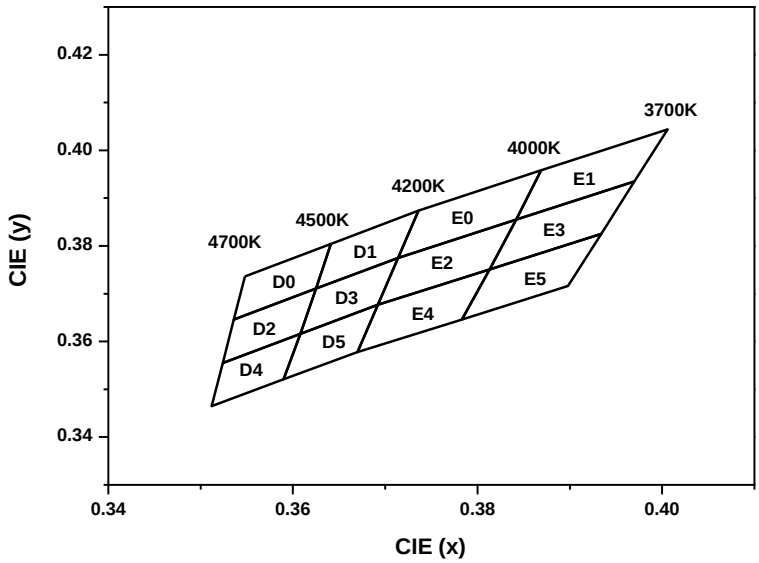

D0		D1		D2		D3		D4	
CIE x	CIE y	CIE x	CIE y	CIE x	CIE y	CIE x	CIE y	CIE x	CIE y
0.3548	0.3736	0.3641	0.3804	0.3536	0.3646	0.3625	0.3711	0.3524	0.3555
0.3536	0.3646	0.3625	0.3711	0.3524	0.3555	0.3608	0.3616	0.3512	0.3465
0.3625	0.3711	0.3714	0.3775	0.3608	0.3616	0.3692	0.3677	0.3590	0.3521
0.3641	0.3804	0.3736	0.3874	0.3625	0.3711	0.3714	0.3775	0.3608	0.3616

D5		E0		E1		E2		E3	
CIE x	CIE y	CIE x	CIE y	CIE x	CIE y	CIE x	CIE y	CIE x	CIE y
0.3608	0.3616	0.3736	0.3874	0.3869	0.3958	0.3714	0.3775	0.3842	0.3855
0.3590	0.3521	0.3714	0.3775	0.3842	0.3855	0.3692	0.3677	0.3813	0.3751
0.3670	0.3578	0.3842	0.3855	0.3970	0.3935	0.3813	0.3751	0.3934	0.3825
0.3692	0.3677	0.3869	0.3958	0.4006	0.4044	0.3842	0.3855	0.3970	0.3935

E4		E5	
CIE x	CIE y	CIE x	CIE y
0.3692	0.3677	0.3813	0.3751
0.3670	0.3578	0.3783	0.3646
0.3783	0.3646	0.3898	0.3716
0.3813	0.3751	0.3934	0.3825

Color Bin Structure

CIE Chromaticity Diagram (Warm white), T_j=25℃, I_F=350mA

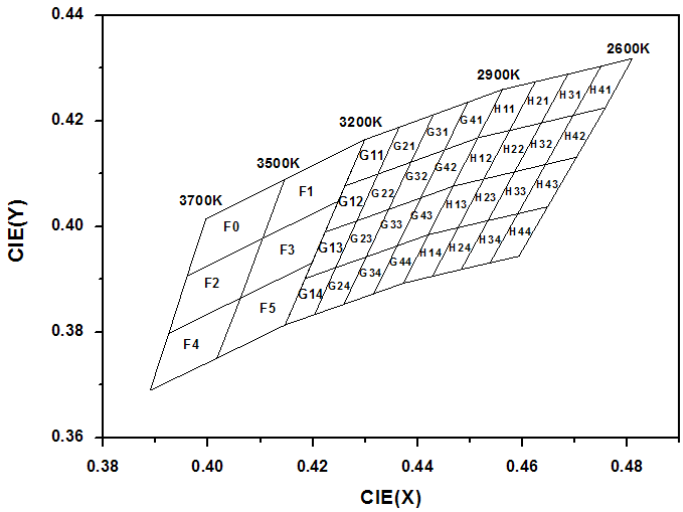

F0		F1		F2		F3		F4	
CIE x	CIE y	CIE x	CIE y	CIE x	CIE y	CIE x	CIE y	CIE x	CIE y
0.3996	0.4015	0.4146	0.4089	0.396	0.3907	0.4104	0.3978	0.3925	0.3798
0.396	0.3907	0.4104	0.3978	0.3925	0.3798	0.4062	0.3865	0.3889	0.369
0.4104	0.3978	0.4248	0.4048	0.4062	0.3865	0.4198	0.3931	0.4017	0.3751
0.4146	0.4089	0.4299	0.4165	0.4104	0.3978	0.4248	0.4048	0.4062	0.3865
F5		**G11**		**G12**		**G13**		**G14**	
CIE x	CIE y	CIE x	CIE y	CIE x	CIE y	CIE x	CIE y	CIE x	CIE y
0.4062	0.3865	0.4299	0.4165	0.4261	0.4077	0.4223	0.3990	0.4185	0.3902
0.4017	0.3751	0.4261	0.4077	0.4223	0.3990	0.4185	0.3902	0.4147	0.3814
0.4147	0.3814	0.4324	0.4100	0.4284	0.4011	0.4243	0.3922	0.4203	0.3834
0.4198	0.3931	0.4365	0.4189	0.4324	0.4100	0.4284	0.4011	0.4243	0.3922
G21		**G22**		**G23**		**G24**		**G31**	
CIE x	CIE y	CIE x	CIE y	CIE x	CIE y	CIE x	CIE y	CIE x	CIE y
0.4365	0.4189	0.4324	0.4100	0.4284	0.4011	0.4243	0.3922	0.4430	0.4212
0.4324	0.4100	0.4284	0.4011	0.4243	0.3922	0.4203	0.3834	0.4387	0.4122
0.4387	0.4122	0.4345	0.4033	0.4302	0.3943	0.4259	0.3853	0.4451	0.4145
0.4430	0.4212	0.4387	0.4122	0.4345	0.4033	0.4302	0.3943	0.4496	0.4236
G32		**G33**		**G34**		**G41**		**G42**	
CIE x	CIE y	CIE x	CIE y	CIE x	CIE y	CIE x	CIE y	CIE x	CIE y
0.4387	0.4122	0.4345	0.4033	0.4302	0.3943	0.4496	0.4236	0.4451	0.4145
0.4345	0.4033	0.4302	0.3943	0.4259	0.3853	0.4451	0.4145	0.4406	0.4055
0.4406	0.4055	0.4361	0.3964	0.4316	0.3873	0.4515	0.4168	0.4468	0.4077
0.4451	0.4145	0.4406	0.4055	0.4361	0.3964	0.4562	0.4260	0.4515	0.4168

Color Bin Structure

CIE Chromaticity Diagram (Warm white), T_j=25℃, I_F=350mA

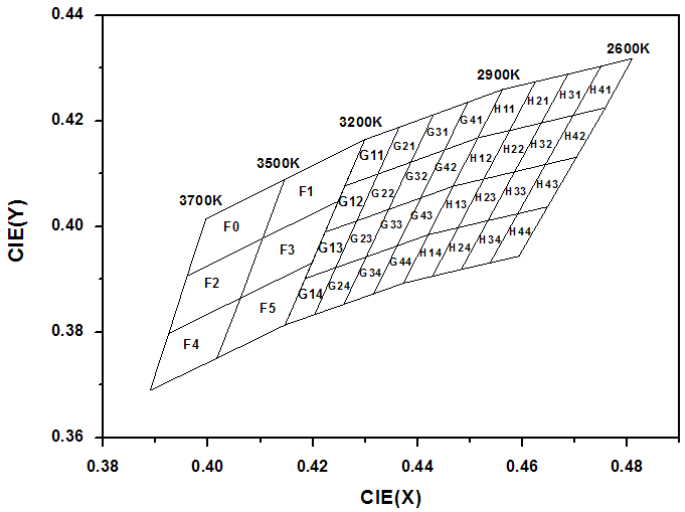

G43		G44		H11		H12		H13	
CIE x	CIE y	CIE x	CIE y	CIE x	CIE y	CIE x	CIE y	CIE x	CIE y
0.4406	0.4055	0.4361	0.3964	0.4625	0.4275	0.4575	0.4182	0.4526	0.4090
0.4361	0.3964	0.4316	0.3873	0.4575	0.4182	0.4526	0.4090	0.4477	0.3998
0.4420	0.3985	0.4373	0.3893	0.4515	0.4168	0.4468	0.4077	0.4420	0.3985
0.4468	0.4077	0.4420	0.3985	0.4562	0.4260	0.4515	0.4168	0.4468	0.4077

H14		H21		H22		H23		H24	
CIE x	CIE y	CIE x	CIE y	CIE x	CIE y	CIE x	CIE y	CIE x	CIE y
0.4477	0.3998	0.4687	0.4289	0.4636	0.4197	0.4585	0.4104	0.4534	0.4012
0.4428	0.3906	0.4636	0.4197	0.4585	0.4104	0.4534	0.4012	0.4483	0.3919
0.4373	0.3893	0.4575	0.4182	0.4526	0.4090	0.4477	0.3998	0.4428	0.3906
0.4420	0.3985	0.4625	0.4275	0.4575	0.4182	0.4526	0.4090	0.4477	0.3998

H31		H32		H33		H34		H41	
CIE x	CIE y	CIE x	CIE y	CIE x	CIE y	CIE x	CIE y	CIE x	CIE y
0.4750	0.4304	0.4697	0.4211	0.4644	0.4118	0.4591	0.4025	0.4810	0.4319
0.4697	0.4211	0.4644	0.4118	0.4591	0.4025	0.4538	0.3932	0.4758	0.4225
0.4636	0.4197	0.4585	0.4104	0.4534	0.4012	0.4483	0.3919	0.4697	0.4211
0.4687	0.4289	0.4636	0.4197	0.4585	0.4104	0.4534	0.4012	0.4750	0.4304

H42		H43		H44	
CIE x	CIE y	CIE x	CIE y	CIE x	CIE y
0.4758	0.4225	0.4703	0.4132	0.4648	0.4038
0.4703	0.4132	0.4648	0.4038	0.4593	0.3944
0.4644	0.4118	0.4591	0.4025	0.4538	0.3932
0.4697	0.4211	0.4644	0.4188	0.4591	0.4025

Mechanical Dimensions

Top View

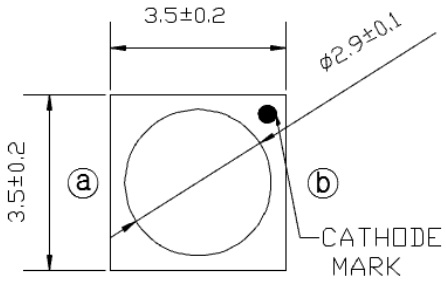

Bottom View

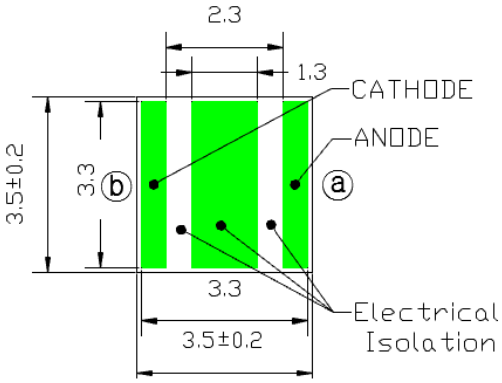

Side View

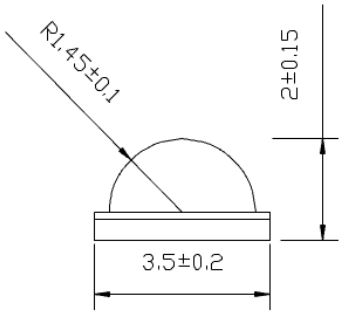

Circuit

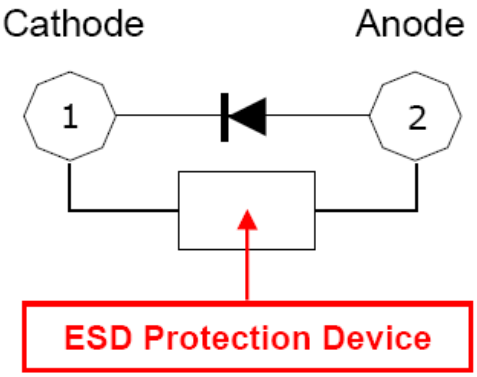

Notes :

(1) All dimensions are in millimeters.
(2) Scale : none
(3) Undefined tolerance is ±0.1mm

Emitter Tape & Reel Packaging

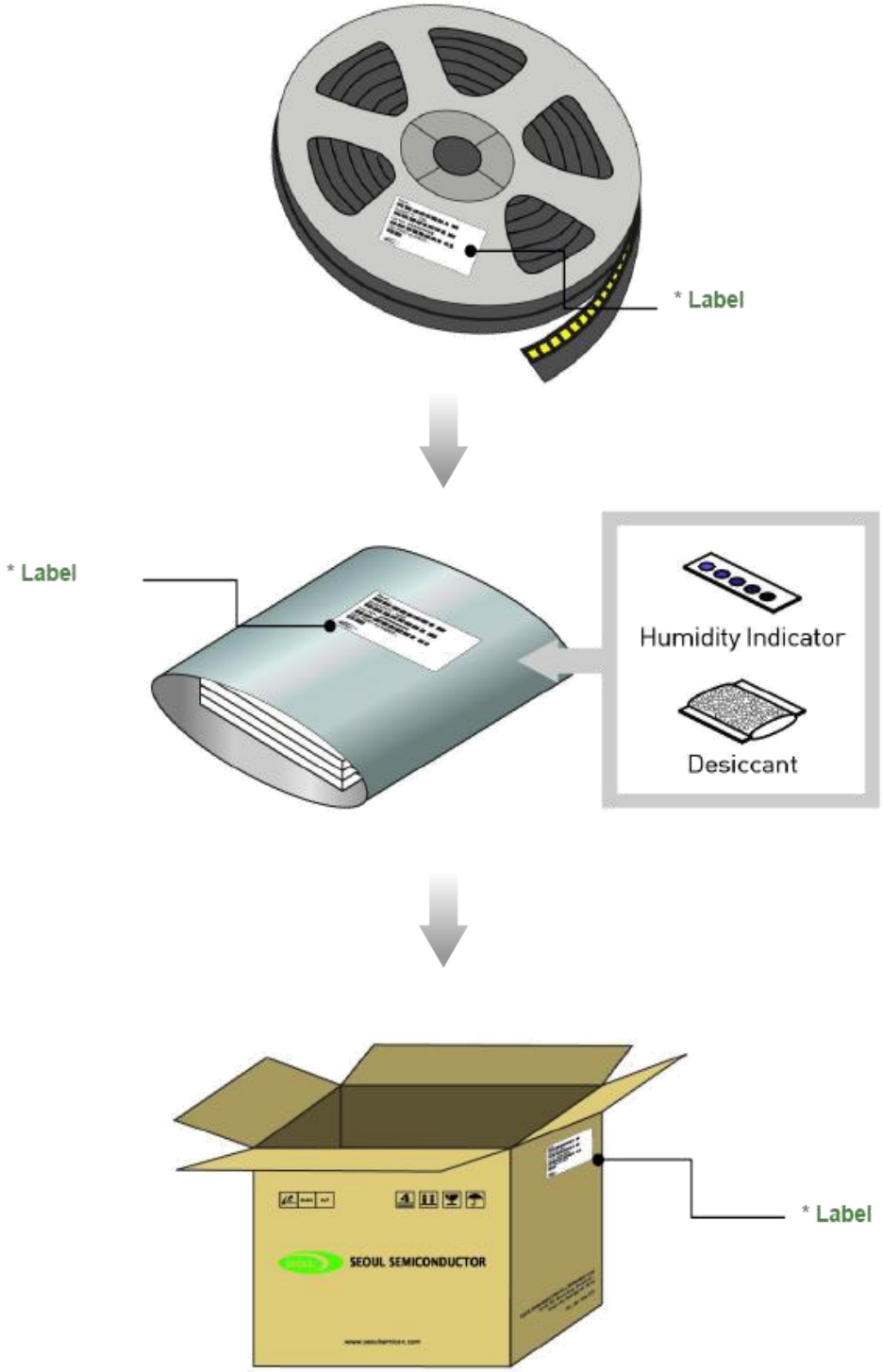

Product Nomenclature

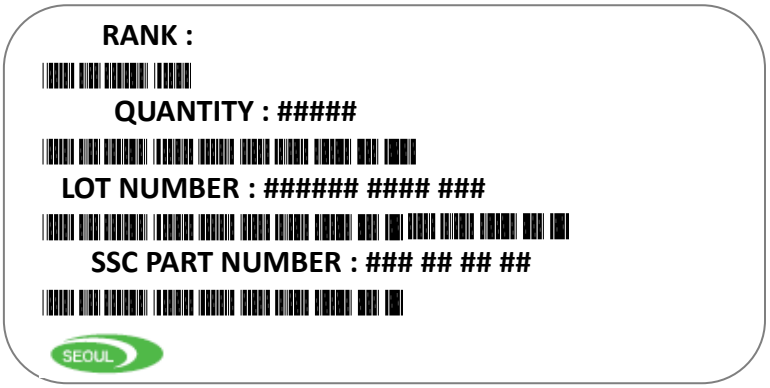

Table 8. Part Numbering System : $X_1X_2X_3$ - X_4X_5 - X_6X_7 - X_8X_9

Part Number Code	Description	Part Number	Value
X_1	Company	S	
X_2	Z-Power LED series number	Z	
X_3	PKG series	5	
X_4	PKG series	M	M series
X_5	Revision number	1	New version
X_6 X_7	Color Specification	W0	Pure white
		WN	Neutral white
		WW	Warm white
X_8 X_9	Color Specification	C8	CRI (min.) 80
		C9	CRI (min.) 90
		00	The others

Table 9. Lot Numbering System : $Y_1Y_1Y_2Y_3Y_3Y_4Y_5Y_5Y_5Y_5$ - $Y_6Y_6Y_6$ - $Y_7Y_7Y_7$ - $Y_8Y_8Y_8Y_8Y_8Y_8Y_8$

Lot Number Code	Description
Y_1	Year
Y_2	Month
Y_3	Day
Y_4	Production area
Y_5	Mass order
Y_6	Taping number
Y_7	Reel number
Y_8	Internal management number

Recommended Solder Pad

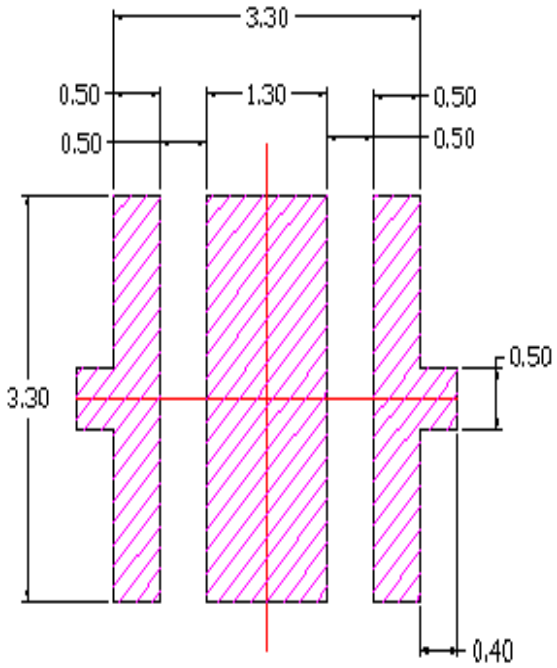

Recommended PCB Solder Pad

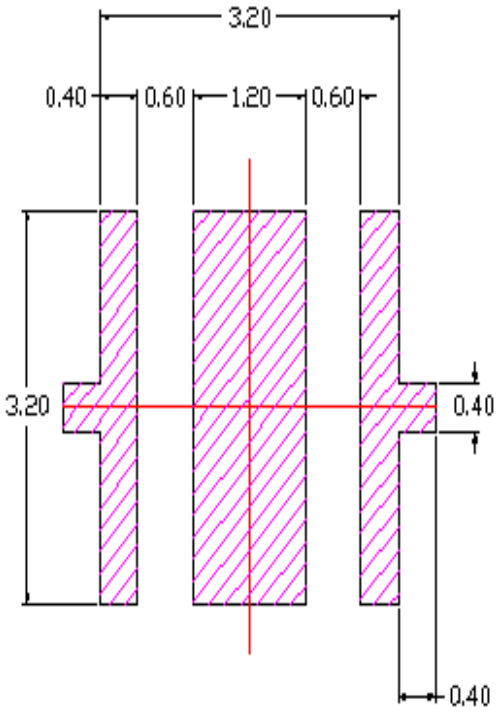

Recommended Stencil Pattern

Notes :

(1) All dimensions are in millimeters.
(2) Scale : none
(3) This drawing without tolerances are for reference only.
(4) Undefined tolerance is ±0.1mm.

Reflow Soldering Characteristics

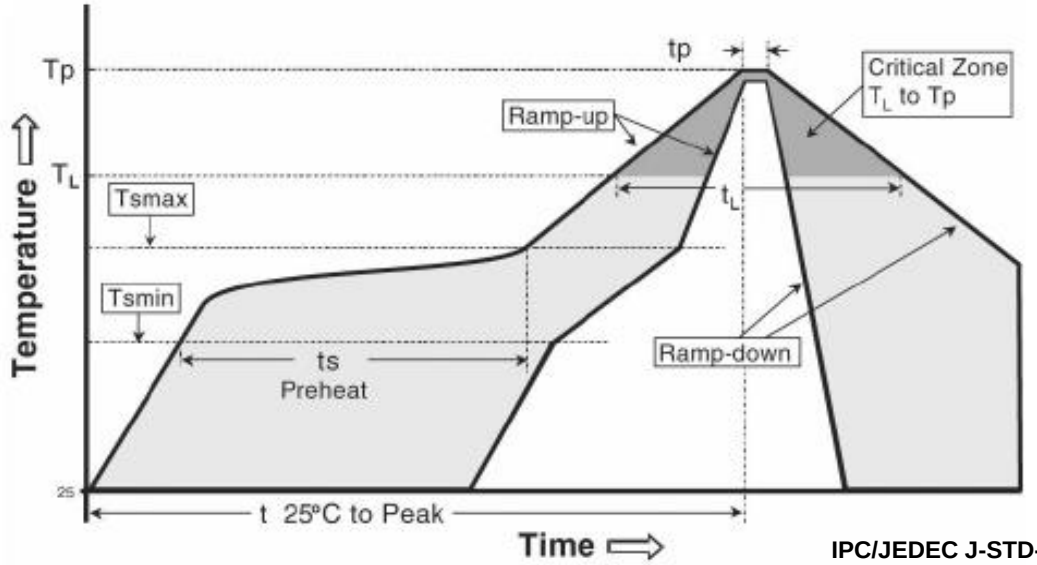

IPC/JEDEC J-STD-020

Table 10.

Profile Feature	Sn-Pb Eutectic Assembly	Pb-Free Assembly
Average ramp-up rate (Tsmax to Tp)	3° C/second max.	3° C/second max.
Preheat - Temperature Min (Tsmin) - Temperature Max (Tsmax) - Time (Tsmin to Tsmax) (ts)	 100 °C 150 °C 60-120 seconds	 150 °C 200 °C 60-180 seconds
Time maintained above: - Temperature (TL) - Time (tL)	 183 °C 60-150 seconds	 217 °C 60-150 seconds
Peak Temperature (Tp)	215℃	260℃
Time within 5°C of actual Peak Temperature (tp)2	10-30 seconds	20-40 seconds
Ramp-down Rate	6 °C/second max.	6 °C/second max.
Time 25°C to Peak Temperature	6 minutes max.	8 minutes max.

Caution

(1) Reflow soldering is recommended not to be done more than two times. In the case of more than 24 hours passed soldering after first, LEDs will be damaged.
(2) Repairs should not be done after the LEDs have been soldered. When repair is unavoidable, suitable tools must be used.
(3) Die slug is to be soldered.
(4) When soldering, do not put stress on the LEDs during heating.
(5) After soldering, do not warp the circuit board.

Handling of Silicone Resin for LEDs

(1) During processing, mechanical stress on the surface should be minimized as much as possible. Sharp objects of all types should not be used to pierce the sealing compound.

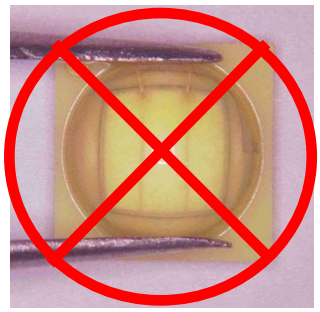

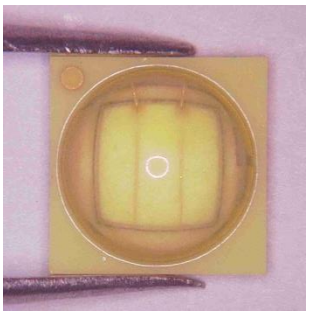

(2) In general, LEDs should only be handled from the side. By the way, this also applies to LEDs without a silicone sealant, since the surface can also become scratched.

(3) When populating boards in SMT production, there are basically no restrictions regarding the form of the pick and place nozzle, except that mechanical pressure on the surface of the resin must be prevented. This is assured by choosing a pick and place nozzle which is larger than the LED's reflector area.

(4) Silicone differs from materials conventionally used for the manufacturing of LEDs. These conditions must be considered during the handling of such devices. Compared to standard encapsulants, silicone is generally softer, and the surface is more likely to attract dust. As mentioned previously, the increased sensitivity to dust requires special care during processing. In cases where a minimal level of dirt and dust particles cannot be guaranteed, a suitable cleaning solution must be applied to the surface after the soldering of components.

(5) Seoul Semiconductor suggests using isopropyl alcohol for cleaning. In case other solvents are used, it must be assured that these solvents do not dissolve the package or resin. Ultrasonic cleaning is not recommended. Ultrasonic cleaning may cause damage to the LED.

(6) Please do not mold this product into another resin (epoxy, urethane, etc) and do not handle this product with acid or sulfur material in sealed space.

(7) Avoid leaving fingerprints on silicone resin parts.

Precaution for Use

(1) Storage

To avoid the moisture penetration, we recommend storing Z5 Series LEDs in a dry box with a desiccant . The recommended storage temperature range is 5℃ to 30℃ and a maximum humidity of RH50%.

(2) Use Precaution after Opening the Packaging

Use proper SMD techniques when the LED is to be soldered dipped as separation of the lens may affect the light output efficiency.

Pay attention to the following:

a. Recommend conditions after opening the package

- Sealing / Temperature : 5 ~ 40℃ Humidity : less than RH30%

b. If the package has been opened more than 1 year (MSL 2) or the color of the desiccant changes, components should be dried for 10-12hr at 60±5℃

(3) Do not apply mechanical force or excess vibration during the cooling process to normal temperature after soldering.

(4) Do not rapidly cool device after soldering.

(5) Components should not be mounted on warped (non coplanar) portion of PCB.

(6) Radioactive exposure is not considered for the products listed here in.

(7) Gallium arsenide is used in some of the products listed in this publication. These products are dangerous if they are burned or shredded in the process of disposal. It is also dangerous to drink the liquid or inhale the gas generated by such products when chemically disposed of.

(8) This device should not be used in any type of fluid such as water, oil, organic solvent and etc. When washing is required, IPA (Isopropyl Alcohol) should be used.

(9) When the LEDs are in operation the maximum current should be decided after measuring the package temperature.

(10) LEDs must be stored properly to maintain the device. If the LEDs are stored for 3 months or more after being shipped from Seoul Semiconductor. A sealed container with a nitrogen atmosphere should be used for storage.

(11) The appearance and specifications of the product may be modified for improvement without notice.

(12) Long time exposure of sunlight or occasional UV exposure will cause lens discoloration.

Precaution for Use

(13) VOCs (Volatile organic compounds) emitted from materials used in the construction of fixtures ca n penetrate silicone encapsulants of LEDs and discolor when exposed to heat and photonic energy. T he result can be a significant loss of light output from the fixture. Knowledge of the properties of the m aterials selected to be used in the construction of fixtures can help prevent these issues.

(14) The slug is electrically isolated.

(15) Attaching LEDs, do not use adhesives that outgas organic vapor.

(16) The driving circuit must be designed to allow forward voltage only when it is ON or OFF. If the rev erse voltage is applied to LED, migration can be generated resulting in LED damage.

(17) LEDs are sensitive to Electro-Static Discharge (ESD) and Electrical Over Stress (EOS). Below is a list of suggestions that Seoul Semiconductor purposes to minimize these effects.

a. ESD (Electro Static Discharge)

Electrostatic discharge (ESD) is the defined as the release of static electricity when two objects come into contact. While most ESD events are considered harmless, it can be an expensive problem in many industrial environments during production and storage. The damage from ESD to an LEDs may cause the product to demonstrate unusual characteristics such as:

- Increase in reverse leakage current lowered turn-on voltage
- Abnormal emissions from the LED at low current

The following recommendations are suggested to help minimize the potential for an ESD event.
One or more recommended work area suggestions:

- Ionizing fan setup
- ESD table/shelf mat made of conductive materials
- ESD safe storage containers

One or more personnel suggestion options:
- Antistatic wrist-strap
- Antistatic material shoes
- Antistatic clothes

Environmental controls:
- Humidity control (ESD gets worse in a dry environment)

Precaution for Use

b. EOS (Electrical Over Stress)

Electrical Over-Stress (EOS) is defined as damage that may occur when an electronic device is subjected to a current or voltage that is beyond the maximum specification limits of the device.
The effects from an EOS event can be noticed through product performance like:

- Changes to the performance of the LED package
  (If the damage is around the bond pad area and since the package is completely encapsulated the package may turn on but flicker show severe performance degradation.)
- Changes to the light output of the luminaire from component failure
- Components on the board not operating at determined drive power

Failure of performance from entire fixture due to changes in circuit voltage and current across total circuit causing trickle down failures. It is impossible to predict the failure mode of every LED exposed to electrical overstress as the failure modes have been investigated to vary, but there are some common signs that will indicate an EOS event has occurred:

- Damaged may be noticed to the bond wires (appearing similar to a blown fuse)
- Damage to the bond pads located on the emission surface of the LED package
  (shadowing can be noticed around the bond pads while viewing through a microscope)
- Anomalies noticed in the encapsulation and phosphor around the bond wires.
- This damage usually appears due to the thermal stress produced during the EOS event.

c. To help minimize the damage from an EOS event Seoul Semiconductor recommends utilizing:

- A surge protection circuit
- An appropriately rated over voltage protection device
- A current limiting device

Company Information

Published by

Seoul Semiconductor © 2013 All Rights Reserved.

Company Information

Seoul Semiconductor (www.SeoulSemicon.com) manufacturers and packages a wide selection of light emitting diodes (LEDs) for the automotive, general illumination/lighting, Home appliance, signage and back lighting markets. The company is the world's fifth largest LED supplier, holding more than 10,000 patents globally, while offering a wide range of LED technology and production capacity in areas such as "nPola", "Acrich", the world's first commercially produced AC LED, and "Acrich MJT - Multi-Junction Technology" a proprietary family of high-voltage LEDs.

The company's broad product portfolio includes a wide array of package and device choices such as Acrich and Acirch2, high-brightness LEDs, mid-power LEDs, side-view LEDs, and through-hole type LEDs as well as custom modules, displays, and sensors.

Legal Disclaimer

Information in this document is provided in connection with Seoul Semiconductor products. With respect to any examples or hints given herein, any typical values stated herein and/or any information regarding the application of the device, Seoul Semiconductor hereby disclaims any and all warranties and liabilities of any kind, including without limitation, warranties of non-infringement of intellectual property rights of any third party. The appearance and specifications of the product can be changed to improve the quality and/or performance without notice.

Компания «ЭлектроПласт» предлагает заключение долгосрочных отношений при поставках импортных электронных компонентов на взаимовыгодных условиях!

Наши преимущества:

- Оперативные поставки широкого спектра электронных компонентов отечественного и импортного производства напрямую от производителей и с крупнейших мировых складов;
- Поставка более 17-ти миллионов наименований электронных компонентов;
- Поставка сложных, дефицитных, либо снятых с производства позиций;
- Оперативные сроки поставки под заказ (от 5 рабочих дней);
- Экспресс доставка в любую точку России;
- Техническая поддержка проекта, помощь в подборе аналогов, поставка прототипов;
- Система менеджмента качества сертифицирована по Международному стандарту ISO 9001;
- Лицензия ФСБ на осуществление работ с использованием сведений, составляющих государственную тайну;
- Поставка специализированных компонентов (Xilinx, Altera, Analog Devices, Intersil, Interpoint, Microsemi, Aeroflex, Peregrine, Syfer, Eurofarad, Texas Instrument, Miteq, Cobham, E2V, MA-COM, Hittite, Mini-Circuits,General Dynamics и др.);

Помимо этого, одним из направлений компании «ЭлектроПласт» является направление «Источники питания». Мы предлагаем Вам помощь Конструкторского отдела:

- Подбор оптимального решения, техническое обоснование при выборе компонента;
- Подбор аналогов;
- Консультации по применению компонента;
- Поставка образцов и прототипов;
- Техническая поддержка проекта;
- Защита от снятия компонента с производства.

Как с нами связаться

Телефон: 8 (812) 309 58 32 (многоканальный)
Факс: 8 (812) 320-02-42
Электронная почта: org@eplast1.ru
Адрес: 198099, г. Санкт-Петербург, ул. Калинина, дом 2, корпус 4, литера А.