TEXAS INSTRUMENTS
Data sheet acquired from Harris Semiconductor
SCHS076D – Revised March 2004

CD4518B, CD4520B Types

CMOS Dual Up-Counters

High-Voltage Types (20-Volt Rating)

CD4518B Dual BCD Up-Counter
CD4520B Dual Binary Up-Counter

■ CD4518 Dual BCD Up-Counter and CD4520 Dual Binary Up-Counter each consist of two identical, internally synchronous 4-stage counters. The counter stages are D-type flip-flops having interchangeable CLOCK and ENABLE lines for incrementing on either the positive-going or negative-going transition. For single-unit operation the ENABLE input is maintained high and the counter advances on each positive-going transition of the CLOCK. The counters are cleared by high levels on their RESET lines.

The counter can be cascaded in the ripple mode by connecting Q4 to the enable input of the subsequent counter while the CLOCK input of the latter is held low.

The CD4518B and CD4520B types are supplied in 16-lead hermetic dual-in-line ceramic packages (F3A suffix), 16-lead dual-in-line plastic packages (E suffix), 16-lead small-outline packages (M, M96, and NSR suffixes), and 16-lead thin shrink small-outline packages (PW and PWR suffixes).

Features:

- **Medium-speed operation – 6-MHz typical clock frequency at 10 V**
- **Positive- or negative-edge triggering**
- **Synchronous internal carry propagation**
- **100% tested for quiescent current at 20 V**
- **Maximum input current of 1 μA at 18 V over full package-temperature range; 100 nA at 18 V and 25°C**
- **Noise margin (over full package-temperature range): 1 V at V_{DD} = 5 V; 2 V at V_{DD} = 10 V; 2.5 V at V_{DD} = 15 V**
- **5-V, 10-V, and 15-V parametric ratings**
- **Standardized, symmetrical output characteristics**
- **Meets all requirements of JEDEC Tentative Standard No. 13B, "Standard Specifications for Description of 'B' Series CMOS Devices"**

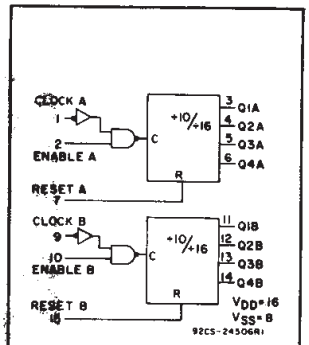

CD4518B, CD4520B
FUNCTIONAL DIAGRAM

Applications:

- **Multistage synchronous counting**
- **Multistage ripple counting**
- **Frequency dividers**

TRUTH TABLE

CLOCK	ENABLE	RESET	ACTION
↑	1	0	Increment Counter
0	↓	0	Increment Counter
↓	X	0	No Change
X	↑	0	No Change
↑	0	0	No Change
1	↓	0	No Change
X	X	1	Q1 thru Q4 = 0

X = Don't Care 1 ≡ High State 0 ≡ Low State

MAXIMUM RATINGS, *Absolute-Maximum Values:*

DC SUPPLY-VOLTAGE RANGE, (V_{DD})
(Voltages referenced to V_{SS} Terminal) ..... -0.5V to +20V
INPUT VOLTAGE RANGE, ALL INPUTS ..... -0.5V to V_{DD} +0.5V
DC INPUT CURRENT, ANY ONE INPUT ..... ±10mA
POWER DISSIPATION PER PACKAGE (P_D):
For T_A = -55°C to +100°C 500mW
For T_A = +100°C to +125°C ..... Derate Linearity at 12mW/°C to 200mW
DEVICE DISSIPATION PER OUTPUT TRANSISTOR
FOR T_A = FULL PACKAGE-TEMPERATURE RANGE (All Package Types) 100mW
OPERATING-TEMPERATURE RANGE (T_A) ..... -55°C to +125°C
STORAGE TEMPERATURE RANGE (T_{stg}) ..... -65°C to +150°C
LEAD TEMPERATURE (DURING SOLDERING):
At distance 1/16 ± 1/32 inch (1.59 ± 0.79mm) from case for 10s max ..... +265°C

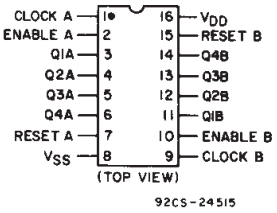

CD4518B, CD4520B
TERMINAL ASSIGNMENT

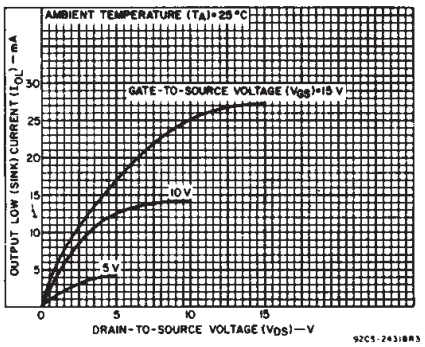

Fig. 1 – Typical output low (sink) current characteristics.

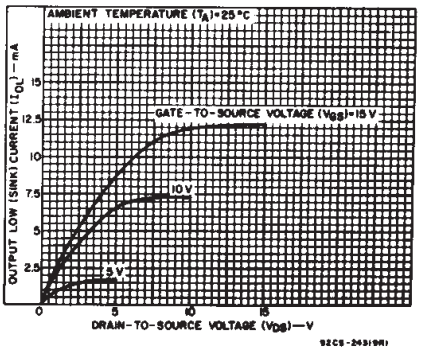

Fig. 2 – Minimum output low (sink) current characteristics.

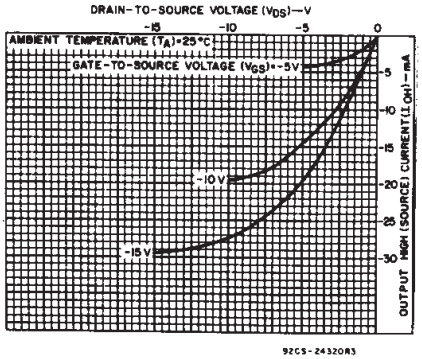

Fig. 3 – Typical output high (source) current characteristics.

Copyright © 2004, Texas Instruments Incorporated

STATIC ELECTRICAL CHARACTERISTICS

CHARACTERISTIC	CONDITIONS			LIMITS AT INDICATED TEMPERATURES (°C)							UNITS
	V_O (V)	V_{IN} (V)	V_{DD} (V)	−55	−40	+85	+125	+25 Min.	+25 Typ.	+25 Max.	
Quiescent Device Current, I_{DD} Max.	–	0,5	5	5	5	150	150	–	0.04	5	μA
	–	0,10	10	10	10	300	300	–	0.04	10	
	–	0,15	15	20	20	600	600	–	0.04	20	
	–	0,20	20	100	100	3000	3000	–	0.08	100	
Output Low (Sink) Current I_{OL} Min.	0.4	0,5	5	0.64	0.61	0.42	0.36	0.51	1	–	mA
	0.5	0,10	10	1.6	1.5	1.1	0.9	1.3	2.6	–	
	1.5	0,15	15	4.2	4	2.8	2.4	3 4	6.8	–	
Output High (Source) Current, I_{OH} Min.	4.6	0,5	5	−0.64	−0.61	−0.42	−0.36	−0.51	−1	–	
	2.5	0,5	5	−2	−1.8	−1.3	−1.15	−1.6	−3.2	–	
	9.5	0,10	10	−1.6	−1.5	−1.1	−0.9	−1.3	−2.6	–	
	13.5	0,15	15	−4.2	−4	−2.8	−2.4	−3.4	−6.8	–	
Output Voltage: Low-Level, V_{OL} Max.	–	0,5	5	0.05				–	0	0.05	V
	–	0,10	10	0.05				–	0	0.05	
	–	0,15	15	0.05				–	0	0.05	
Output Voltage: High-Level, V_{OH} Min.	–	0,5	5	4.95				4.95	5	–	
	–	0,10	10	9.95				9.95	10	–	
	–	0,15	15	14.95				14.95	15	–	
Input Low Voltage, V_{IL} Max.	0.5, 4.5	–	5	1.5				—	—	1.5	V
	1, 9	–	10	3				—	—	3	
	1.5,13.5	–	15	4				—	—	4	
Input High Voltage, V_{IH} Min.	0.5, 4.5	–	5	3.5				3.5	—	—	
	1, 9	–	10	7				7	—	—	
	1.5,13.5	-	15	11				11	—	—	
Input Current I_{IN} Max.	–	0,18	18	±0.1	±0.1	±1	±1	–	$\pm 10^{-5}$	±0.1	μA

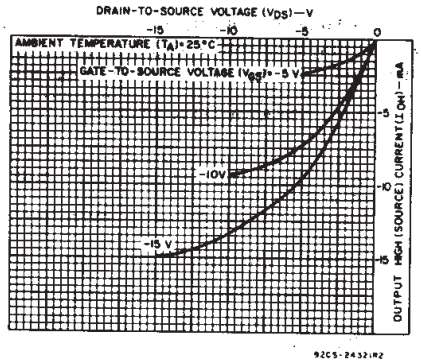

Fig. 4 — Minimum output high (source) current characteristics.

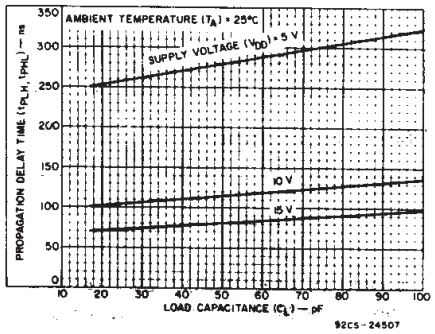

Fig. 5 — Typical propagation delay vs. load capacitance, clock or enable to output.

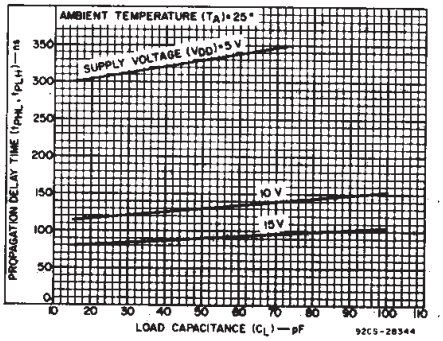

Fig. 6 — Typical propagation delay time vs. load capacitance, reset to output.

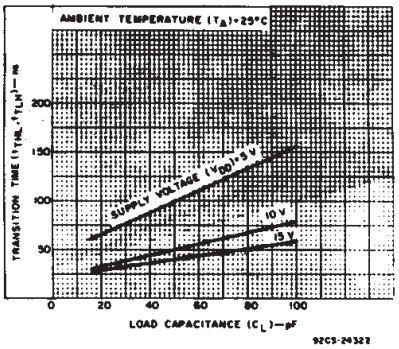

Fig. 7 — Typical transition time vs. load capacitance.

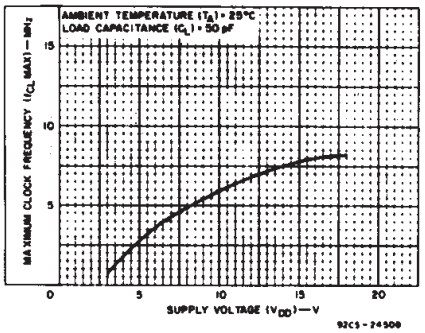

Fig. 8 — Typical maximum-clock-frequency vs. supply voltage.

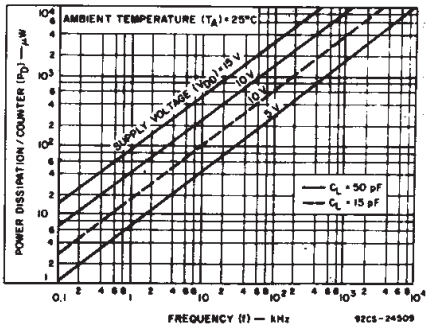

Fig. 9 — Typical power dissipation characteristics.

RECOMMENDED OPERATING CONDITIONS at T_A = 25°C, Except as Noted.
For maximum reliability, nominal operating conditions should be selected so that operation is always within the following ranges:

CHARACTERISTIC	V_{DD} (V)	LIMITS Min.	LIMITS Max.	UNITS
Supply-Voltage Range (For T_A=Full Package-Temperature Range)		3	18	V
Enable Pulse Width, t_W	5 10 15	400 200 140	– – –	ns
Clock Pulse Width, t_W	5 10 15	200 100 70	– – –	ns
Clock Input Frequency, f_{CL}	5 10 15	dc	1.5 3 4	MHz
Clock Rise or Fall Time, t_rCL or t_fCL:	5 10 15	– –	15 5 5	μs
Reset Pulse Width, t_W	5 10 15	250 110 80	– – –	ns

DYNAMIC ELECTRICAL CHARACTERISTICS at T_A=25°C;
Input t_r,t_f=20 ns, C_L=50 pF, R_L=200 KΩ

CHARACTERISTIC	TEST CONDITIONS	V_{DD} V	LIMITS Min.	LIMITS Typ.	LIMITS Max.	UNITS
Propagation Delay Time, t_{PHL}, t_{PLH}: Clock or Enable to Output		5 10 15	– – –	280 115 80	560 230 160	ns
Reset to Output		5 10 15	– – –	330 130 90	650 225 170	ns
Transition Time, t_{THL}, t_{TLH}		5 10 15	– – –	100 50 40	200 100 80	ns
Maximum Clock Input Frequency, f_{CL}		5 10 15	1.5 3 4	3 6 8	– – –	MHz
Minimum Clock Pulse Width, t_W		5 10 15		100 50 35	200 100 70	ns
Clock Rise or Fall Time, t_r or t_f:		5 10, 15	– –	– –	15 5	μs
Minimum Reset Pulse Width, t_W		5 10 15	– –	125 55 40	250 110 80	ns
Minimum Enable Pulse Width, t_W		5 10 15	–	200 100 70	400 200 140	ns
Input Capacitance, C_{IN}	Any Input			5	7.5	pF

TEST CIRCUITS

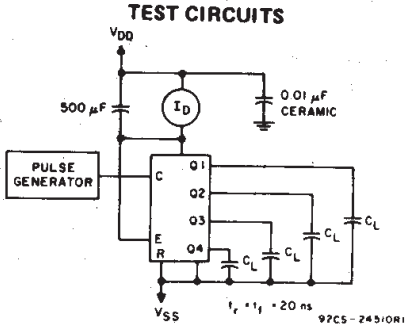

Fig. 10 — Dynamic power dissipation.

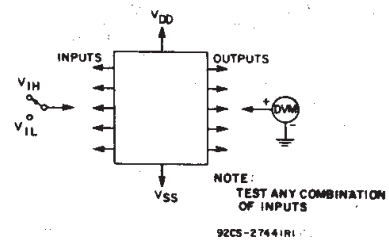

Fig. 11 — Input voltage.

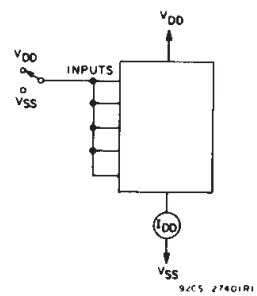

Fig. 12 — Quiescent device current test circuit.

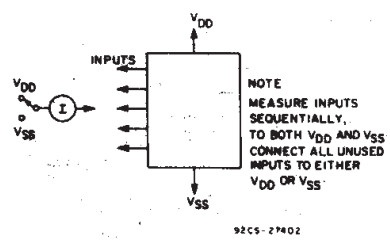

Fig. 13 — Input leakage-current test circuit.

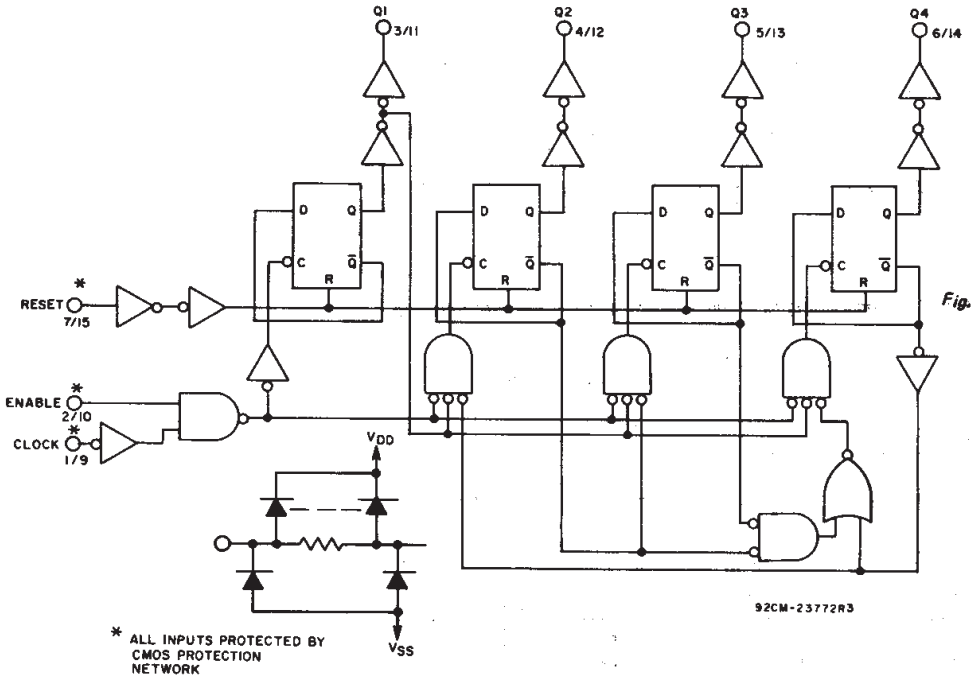

Fig. 14 — Decade counter (CD4518B) logic diagram for one of two identical counters.

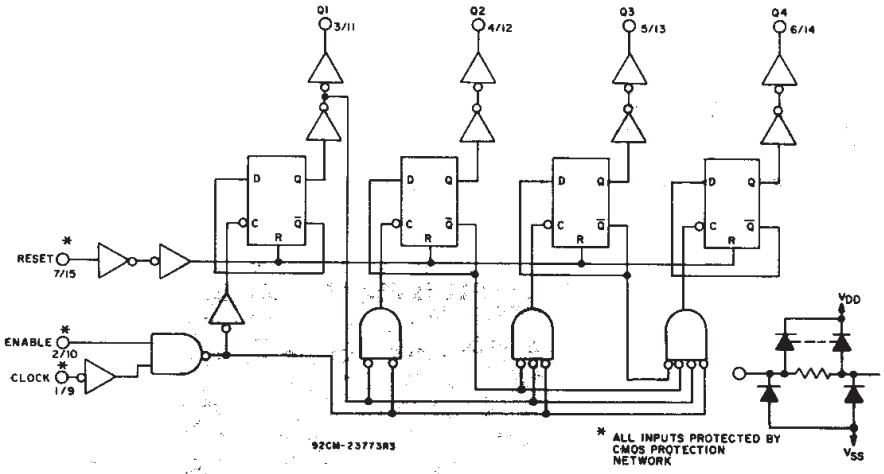

Fig. 15 — Binary counter (CD4520B) logic diagram for one of two identical counters.

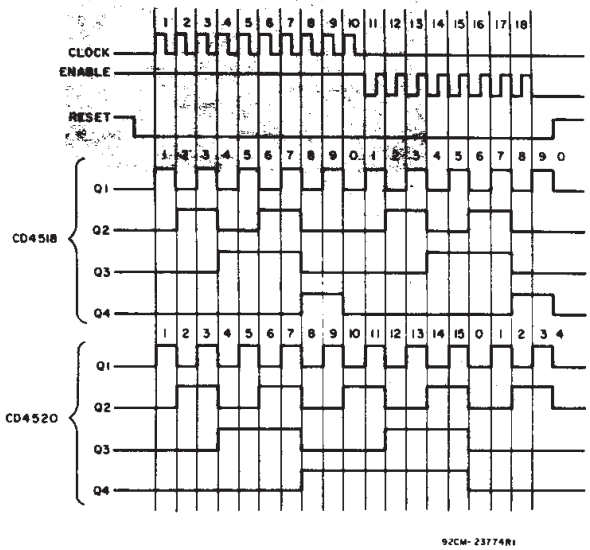

Fig. 16 — Timing diagrams for CD4518B and CD4520B.

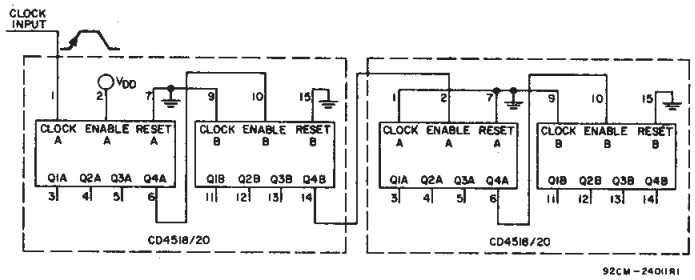

Fig. 17 – Ripple cascading of four counters with positive edge triggering.

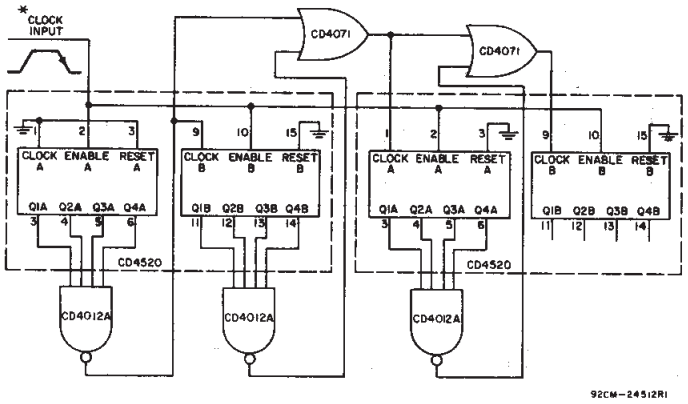

*NOTE:
FOR SYNCHRONOUS CASCADING, THE CLOCK TRANSITION TIME SHOULD BE MADE LESS THAN OR EQUAL TO THE SUM OF THE FIXED PROPAGATION DELAY AT 15 pF AND THE TRANSITION TIME OF THE OUTPUT DRIVER STAGE FOR THE ESTIMATED CAPACITATIVE LOAD.

Fig. 18 – Synchronous cascading of four binary counters with negative edge triggering.

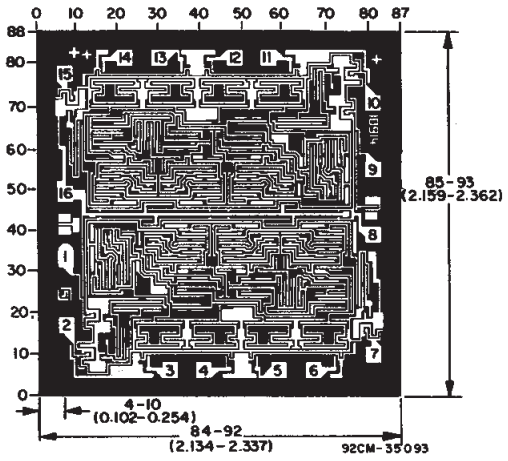

Dimensions and pad layout for CD4518BH chip.

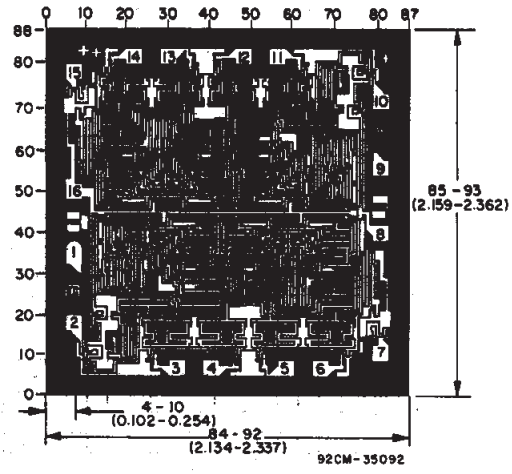

Dimensions and pad layout for CD4520BH chip.

Dimensions in parentheses are in millimeters and are derived from the basic inch dimensions as indicated. Grid graduations are in mils (10^{-3} inch).

PACKAGING INFORMATION

Orderable Device	Status [1]	Package Type	Package Drawing	Pins	Package Qty	Eco Plan [2]	Lead/Ball Finish	MSL Peak Temp [3]
7702301EA	ACTIVE	CDIP	J	16	1	None	Call TI	Level-NC-NC-NC
CD4518BE	ACTIVE	PDIP	N	16	25	Pb-Free (RoHS)	CU NIPDAU	Level-NC-NC-NC
CD4518BF	ACTIVE	CDIP	J	16	1	None	Call TI	Level-NC-NC-NC
CD4518BF3A	ACTIVE	CDIP	J	16	1	None	Call TI	Level-NC-NC-NC
CD4518BM	ACTIVE	SOIC	D	16	40	Pb-Free (RoHS)	CU NIPDAU	Level-2-260C-1 YEAR/ Level-1-235C-UNLIM
CD4518BM96	ACTIVE	SOIC	D	16	2500	Pb-Free (RoHS)	CU NIPDAU	Level-2-260C-1 YEAR/ Level-1-235C-UNLIM
CD4518BNSR	ACTIVE	SO	NS	16	2000	Pb-Free (RoHS)	CU NIPDAU	Level-2-260C-1 YEAR/ Level-1-235C-UNLIM
CD4518BPW	ACTIVE	TSSOP	PW	16	90	Pb-Free (RoHS)	CU NIPDAU	Level-1-250C-UNLIM
CD4518BPWR	ACTIVE	TSSOP	PW	16	2000	Pb-Free (RoHS)	CU NIPDAU	Level-1-250C-UNLIM
CD4520BE	ACTIVE	PDIP	N	16	25	Pb-Free (RoHS)	CU NIPDAU	Level-NC-NC-NC
CD4520BF	ACTIVE	CDIP	J	16	1	None	Call TI	Level-NC-NC-NC
CD4520BF3A	ACTIVE	CDIP	J	16	1	None	Call TI	Level-NC-NC-NC
CD4520BM	ACTIVE	SOIC	D	16	40	Pb-Free (RoHS)	CU NIPDAU	Level-2-260C-1 YEAR/ Level-1-235C-UNLIM
CD4520BM96	ACTIVE	SOIC	D	16	2500	Pb-Free (RoHS)	CU NIPDAU	Level-2-260C-1 YEAR/ Level-1-235C-UNLIM
CD4520BNSR	ACTIVE	SO	NS	16	2000	Pb-Free (RoHS)	CU NIPDAU	Level-2-260C-1 YEAR/ Level-1-235C-UNLIM
CD4520BPW	ACTIVE	TSSOP	PW	16	90	Pb-Free (RoHS)	CU NIPDAU	Level-1-250C-UNLIM
CD4520BPWR	ACTIVE	TSSOP	PW	16	2000	Pb-Free (RoHS)	CU NIPDAU	Level-1-250C-UNLIM

[1] The marketing status values are defined as follows:
ACTIVE: Product device recommended for new designs.
LIFEBUY: TI has announced that the device will be discontinued, and a lifetime-buy period is in effect.
NRND: Not recommended for new designs. Device is in production to support existing customers, but TI does not recommend using this part in a new design.
PREVIEW: Device has been announced but is not in production. Samples may or may not be available.
OBSOLETE: TI has discontinued the production of the device.

[2] Eco Plan - May not be currently available - please check http://www.ti.com/productcontent for the latest availability information and additional product content details.
None: Not yet available Lead (Pb-Free).
Pb-Free (RoHS): TI's terms "Lead-Free" or "Pb-Free" mean semiconductor products that are compatible with the current RoHS requirements for all 6 substances, including the requirement that lead not exceed 0.1% by weight in homogeneous materials. Where designed to be soldered at high temperatures, TI Pb-Free products are suitable for use in specified lead-free processes.
Green (RoHS & no Sb/Br): TI defines "Green" to mean "Pb-Free" and in addition, uses package materials that do not contain halogens, including bromine (Br) or antimony (Sb) above 0.1% of total product weight.

[3] MSL, Peak Temp. -- The Moisture Sensitivity Level rating according to the JEDECindustry standard classifications, and peak solder temperature.

Important Information and Disclaimer: The information provided on this page represents TI's knowledge and belief as of the date that it is provided. TI bases its knowledge and belief on information provided by third parties, and makes no representation or warranty as to the

accuracy of such information. Efforts are underway to better integrate information from third parties. TI has taken and continues to take reasonable steps to provide representative and accurate information but may not have conducted destructive testing or chemical analysis on incoming materials and chemicals. TI and TI suppliers consider certain information to be proprietary, and thus CAS numbers and other limited information may not be available for release.

In no event shall TI's liability arising out of such information exceed the total purchase price of the TI part(s) at issue in this document sold by TI to Customer on an annual basis.

J (R–GDIP–T**) CERAMIC DUAL IN–LINE PACKAGE

14 LEADS SHOWN

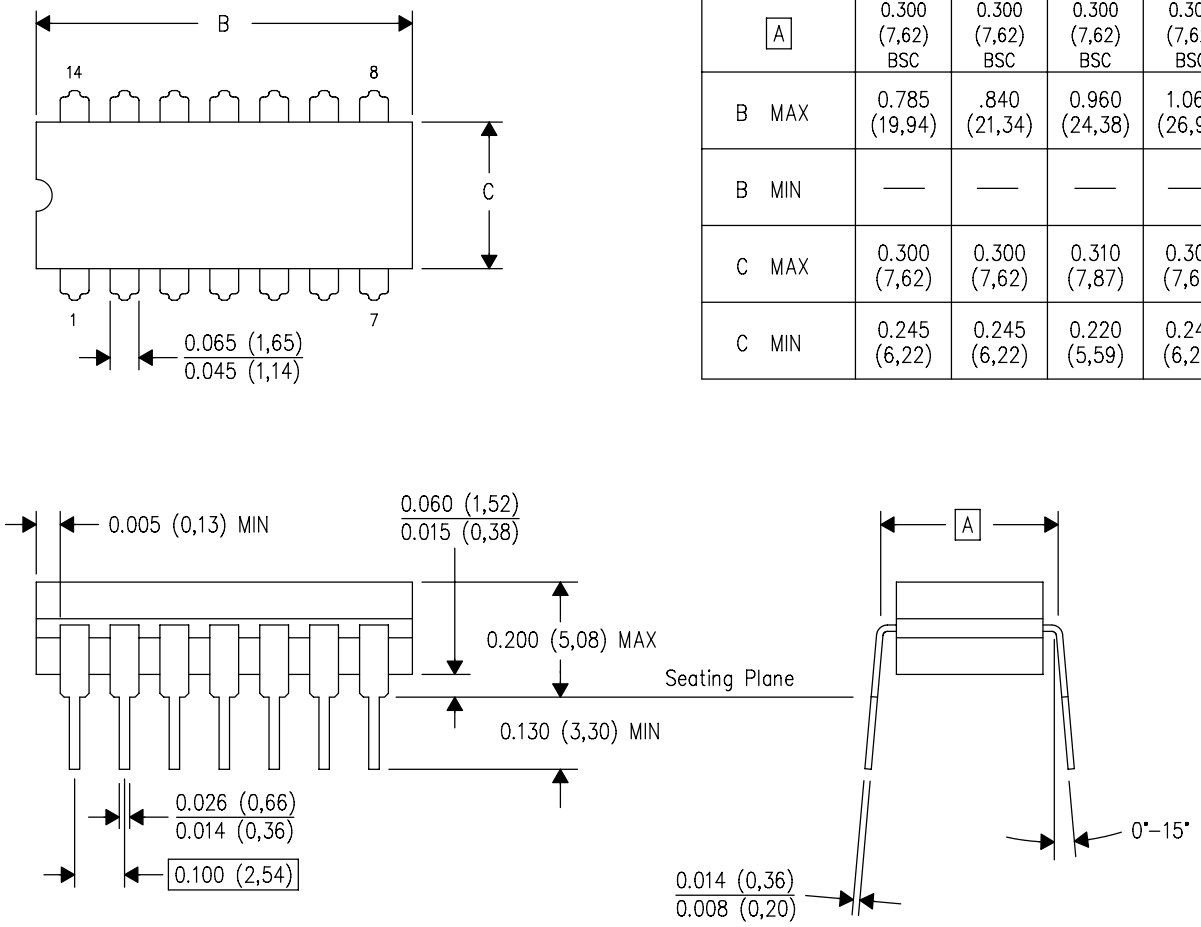

DIM \ PINS **	14	16	18	20
A	0.300 (7,62) BSC	0.300 (7,62) BSC	0.300 (7,62) BSC	0.300 (7,62) BSC
B MAX	0.785 (19,94)	.840 (21,34)	0.960 (24,38)	1.060 (26,92)
B MIN	—	—	—	—
C MAX	0.300 (7,62)	0.300 (7,62)	0.310 (7,87)	0.300 (7,62)
C MIN	0.245 (6,22)	0.245 (6,22)	0.220 (5,59)	0.245 (6,22)

4040083/F 03/03

NOTES:
- A. All linear dimensions are in inches (millimeters).
- B. This drawing is subject to change without notice.
- C. This package is hermetically sealed with a ceramic lid using glass frit.
- D. Index point is provided on cap for terminal identification only on press ceramic glass frit seal only.
- E. Falls within MIL STD 1835 GDIP1–T14, GDIP1–T16, GDIP1–T18 and GDIP1–T20.

N (R–PDIP–T**) PLASTIC DUAL–IN–LINE PACKAGE

16 PINS SHOWN

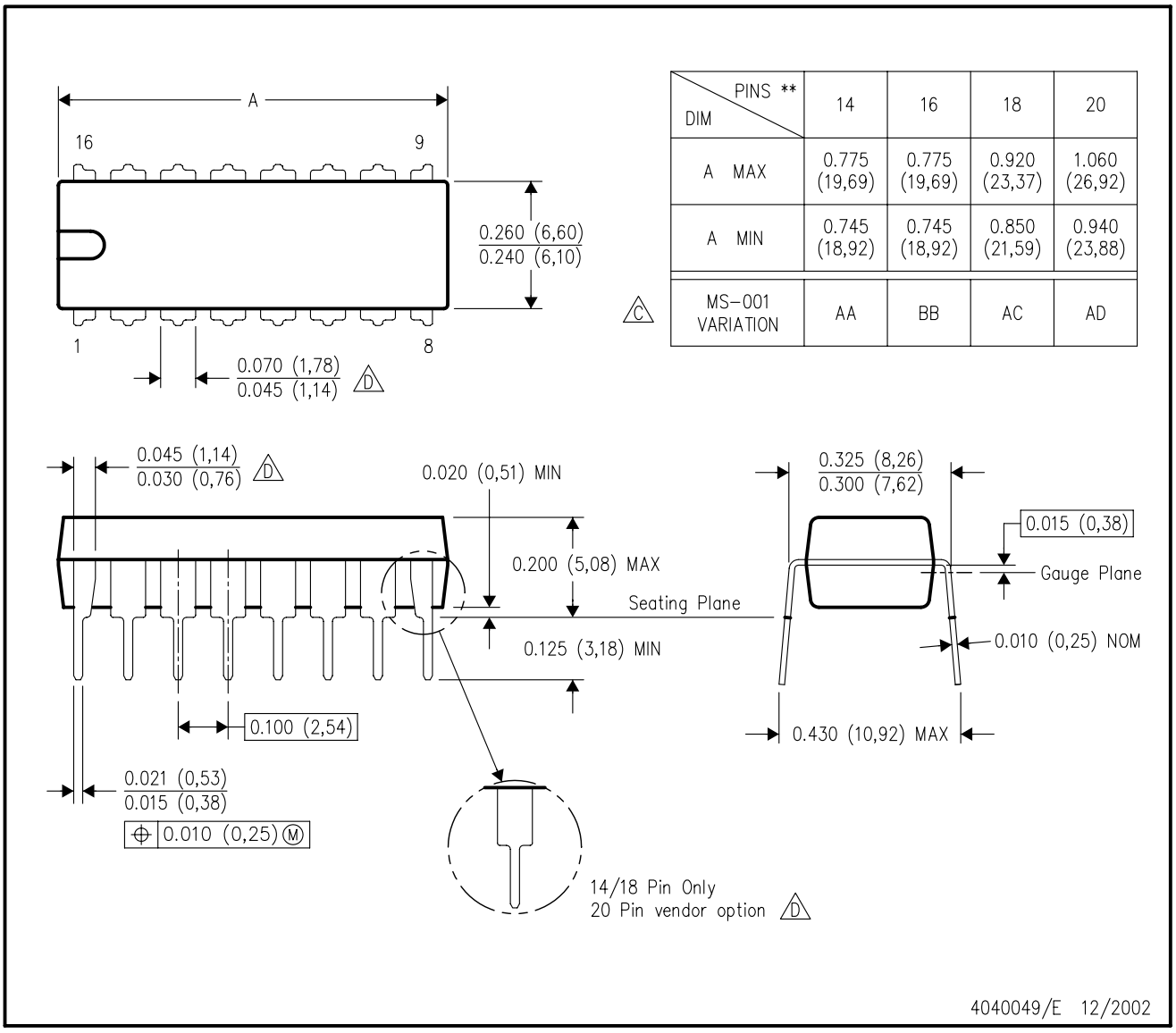

DIM \ PINS **	14	16	18	20
A MAX	0.775 (19,69)	0.775 (19,69)	0.920 (23,37)	1.060 (26,92)
A MIN	0.745 (18,92)	0.745 (18,92)	0.850 (21,59)	0.940 (23,88)
MS–001 VARIATION (C)	AA	BB	AC	AD

NOTES:
A. All linear dimensions are in inches (millimeters).
B. This drawing is subject to change without notice.
C. Falls within JEDEC MS–001, except 18 and 20 pin minimum body length (Dim A).
D. The 20 pin end lead shoulder width is a vendor option, either half or full width.

D (R–PDSO–G16) PLASTIC SMALL–OUTLINE PACKAGE

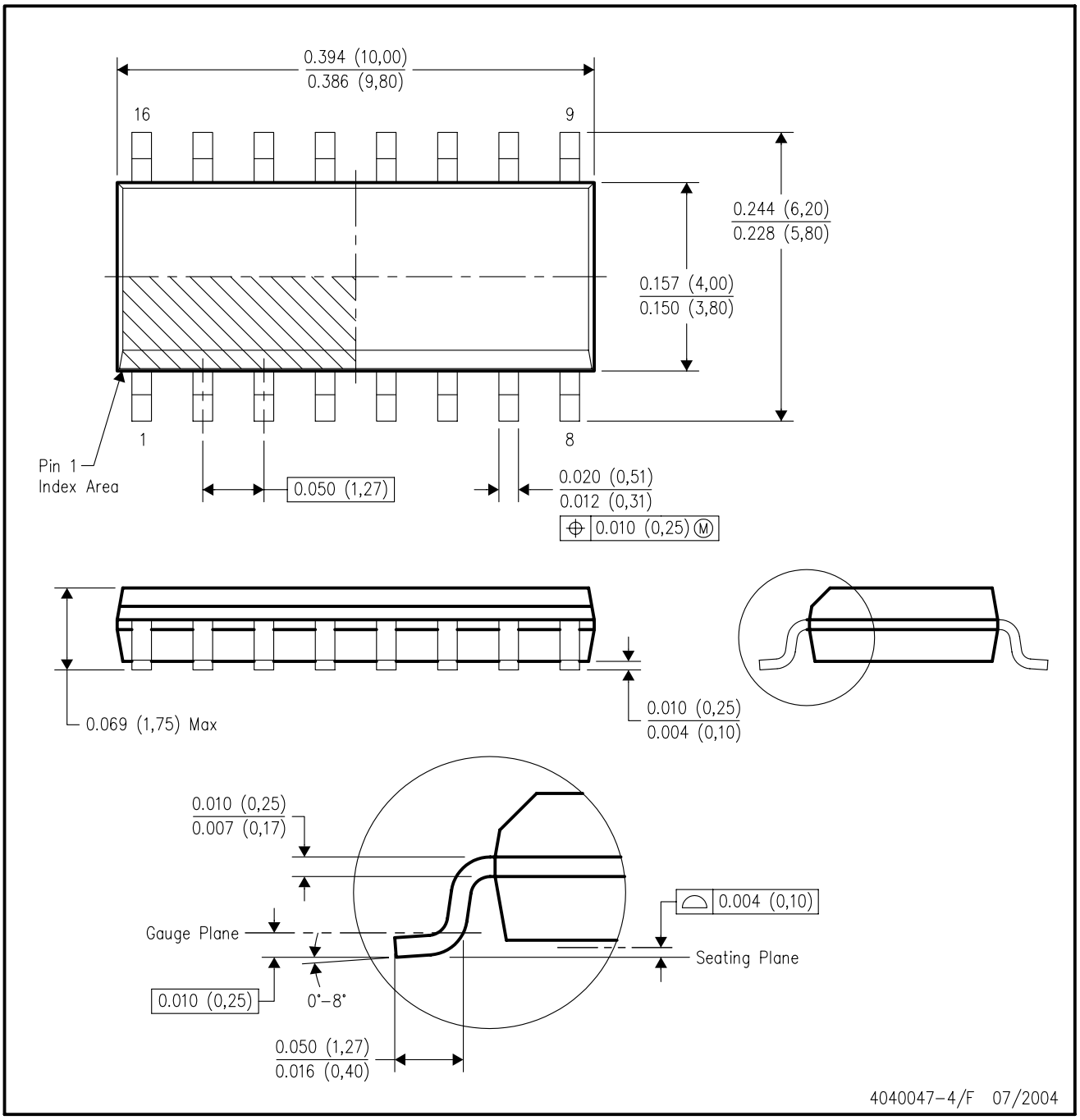

NOTES:
A. All linear dimensions are in inches (millimeters).
B. This drawing is subject to change without notice.
C. Body dimensions do not include mold flash or protrusion not to exceed 0.006 (0,15).
D. Falls within JEDEC MS–012 variation AC.

MECHANICAL DATA

NS (R-PDSO-G)** **PLASTIC SMALL-OUTLINE PACKAGE**

14-PINS SHOWN

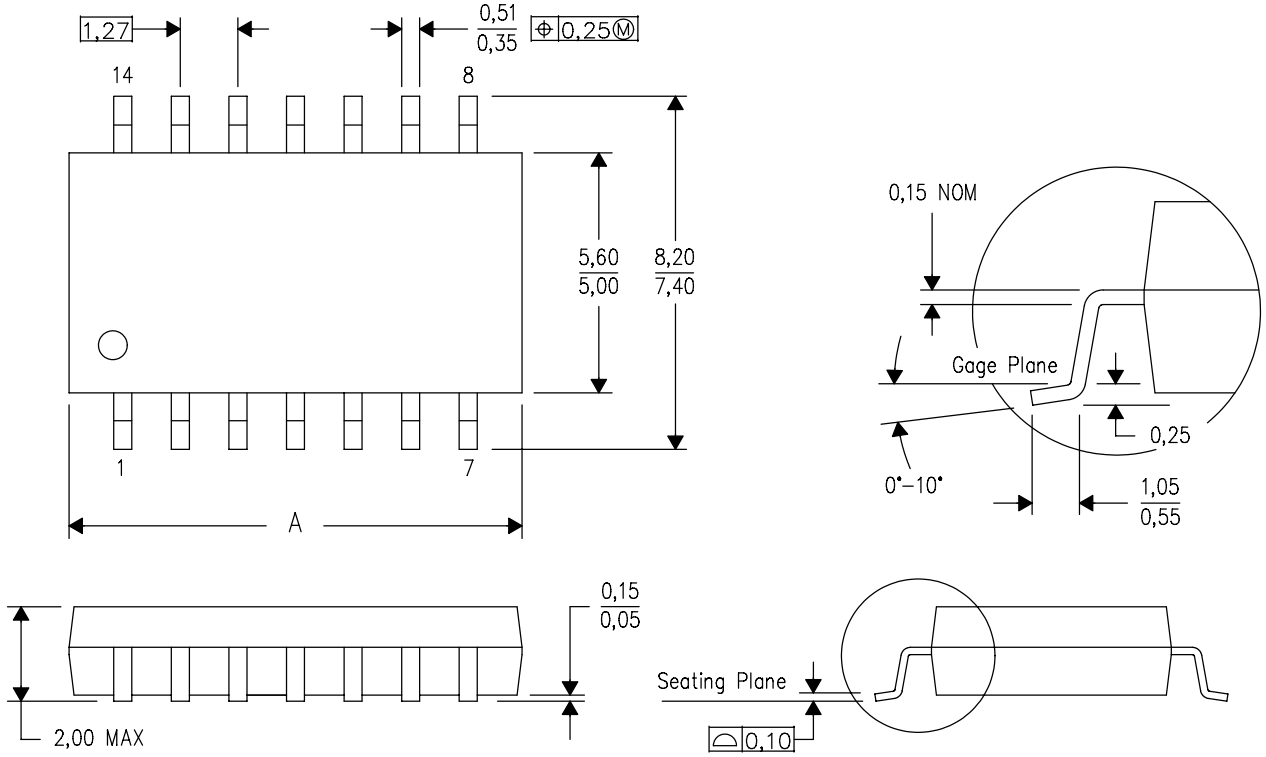

DIM \ PINS **	14	16	20	24
A MAX	10,50	10,50	12,90	15,30
A MIN	9,90	9,90	12,30	14,70

4040062/C 03/03

NOTES:
A. All linear dimensions are in millimeters.
B. This drawing is subject to change without notice.
C. Body dimensions do not include mold flash or protrusion, not to exceed 0,15.

PW (R-PDSO-G)** **PLASTIC SMALL-OUTLINE PACKAGE**

14 PINS SHOWN

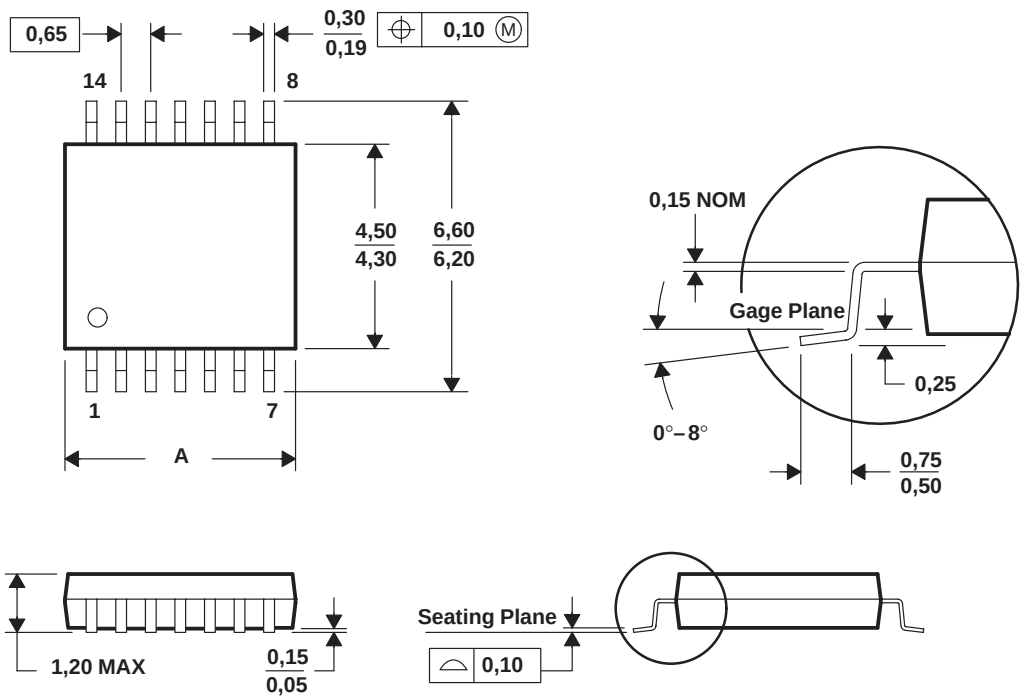

DIM \ PINS **	8	14	16	20	24	28
A MAX	3,10	5,10	5,10	6,60	7,90	9,80
A MIN	2,90	4,90	4,90	6,40	7,70	9,60

4040064/F 01/97

NOTES: A. All linear dimensions are in millimeters.
B. This drawing is subject to change without notice.
C. Body dimensions do not include mold flash or protrusion not to exceed 0,15.
D. Falls within JEDEC MO-153

IMPORTANT NOTICE

Texas Instruments Incorporated and its subsidiaries (TI) reserve the right to make corrections, modifications, enhancements, improvements, and other changes to its products and services at any time and to discontinue any product or service without notice. Customers should obtain the latest relevant information before placing orders and should verify that such information is current and complete. All products are sold subject to TI's terms and conditions of sale supplied at the time of order acknowledgment.

TI warrants performance of its hardware products to the specifications applicable at the time of sale in accordance with TI's standard warranty. Testing and other quality control techniques are used to the extent TI deems necessary to support this warranty. Except where mandated by government requirements, testing of all parameters of each product is not necessarily performed.

TI assumes no liability for applications assistance or customer product design. Customers are responsible for their products and applications using TI components. To minimize the risks associated with customer products and applications, customers should provide adequate design and operating safeguards.

TI does not warrant or represent that any license, either express or implied, is granted under any TI patent right, copyright, mask work right, or other TI intellectual property right relating to any combination, machine, or process in which TI products or services are used. Information published by TI regarding third-party products or services does not constitute a license from TI to use such products or services or a warranty or endorsement thereof. Use of such information may require a license from a third party under the patents or other intellectual property of the third party, or a license from TI under the patents or other intellectual property of TI.

Reproduction of information in TI data books or data sheets is permissible only if reproduction is without alteration and is accompanied by all associated warranties, conditions, limitations, and notices. Reproduction of this information with alteration is an unfair and deceptive business practice. TI is not responsible or liable for such altered documentation.

Resale of TI products or services with statements different from or beyond the parameters stated by TI for that product or service voids all express and any implied warranties for the associated TI product or service and is an unfair and deceptive business practice. TI is not responsible or liable for any such statements.

Following are URLs where you can obtain information on other Texas Instruments products and application solutions:

Products		**Applications**	
Amplifiers	amplifier.ti.com	Audio	www.ti.com/audio
Data Converters	dataconverter.ti.com	Automotive	www.ti.com/automotive
DSP	dsp.ti.com	Broadband	www.ti.com/broadband
Interface	interface.ti.com	Digital Control	www.ti.com/digitalcontrol
Logic	logic.ti.com	Military	www.ti.com/military
Power Mgmt	power.ti.com	Optical Networking	www.ti.com/opticalnetwork
Microcontrollers	microcontroller.ti.com	Security	www.ti.com/security
		Telephony	www.ti.com/telephony
		Video & Imaging	www.ti.com/video
		Wireless	www.ti.com/wireless

Mailing Address: Texas Instruments
Post Office Box 655303 Dallas, Texas 75265

Copyright © 2005, Texas Instruments Incorporated

Компания «ЭлектроПласт» предлагает заключение долгосрочных отношений при поставках импортных электронных компонентов на взаимовыгодных условиях!

Наши преимущества:

- Оперативные поставки широкого спектра электронных компонентов отечественного и импортного производства напрямую от производителей и с крупнейших мировых складов;
- Поставка более 17-ти миллионов наименований электронных компонентов;
- Поставка сложных, дефицитных, либо снятых с производства позиций;
- Оперативные сроки поставки под заказ (от 5 рабочих дней);
- Экспресс доставка в любую точку России;
- Техническая поддержка проекта, помощь в подборе аналогов, поставка прототипов;
- Система менеджмента качества сертифицирована по Международному стандарту ISO 9001;
- Лицензия ФСБ на осуществление работ с использованием сведений, составляющих государственную тайну;
- Поставка специализированных компонентов (Xilinx, Altera, Analog Devices, Intersil, Interpoint, Microsemi, Aeroflex, Peregrine, Syfer, Eurofarad, Texas Instrument, Miteq, Cobham, E2V, MA-COM, Hittite, Mini-Circuits,General Dynamics и др.);

Помимо этого, одним из направлений компании «ЭлектроПласт» является направление «Источники питания». Мы предлагаем Вам помощь Конструкторского отдела:

- Подбор оптимального решения, техническое обоснование при выборе компонента;
- Подбор аналогов;
- Консультации по применению компонента;
- Поставка образцов и прототипов;
- Техническая поддержка проекта;
- Защита от снятия компонента с производства.

Как с нами связаться

Телефон: 8 (812) 309 58 32 (многоканальный)
Факс: 8 (812) 320-02-42
Электронная почта: org@eplast1.ru
Адрес: 198099, г. Санкт-Петербург, ул. Калинина, дом 2, корпус 4, литера А.