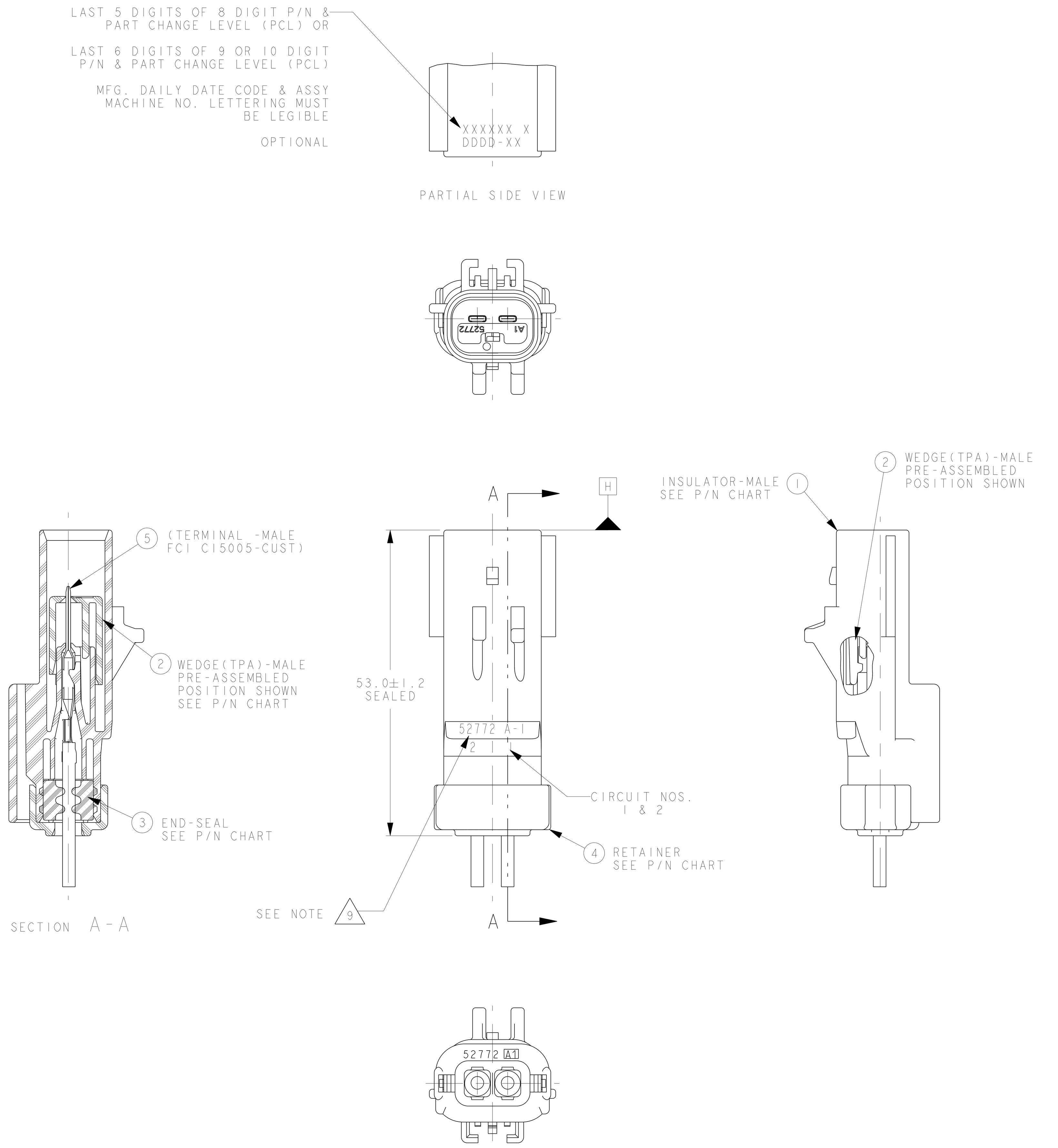

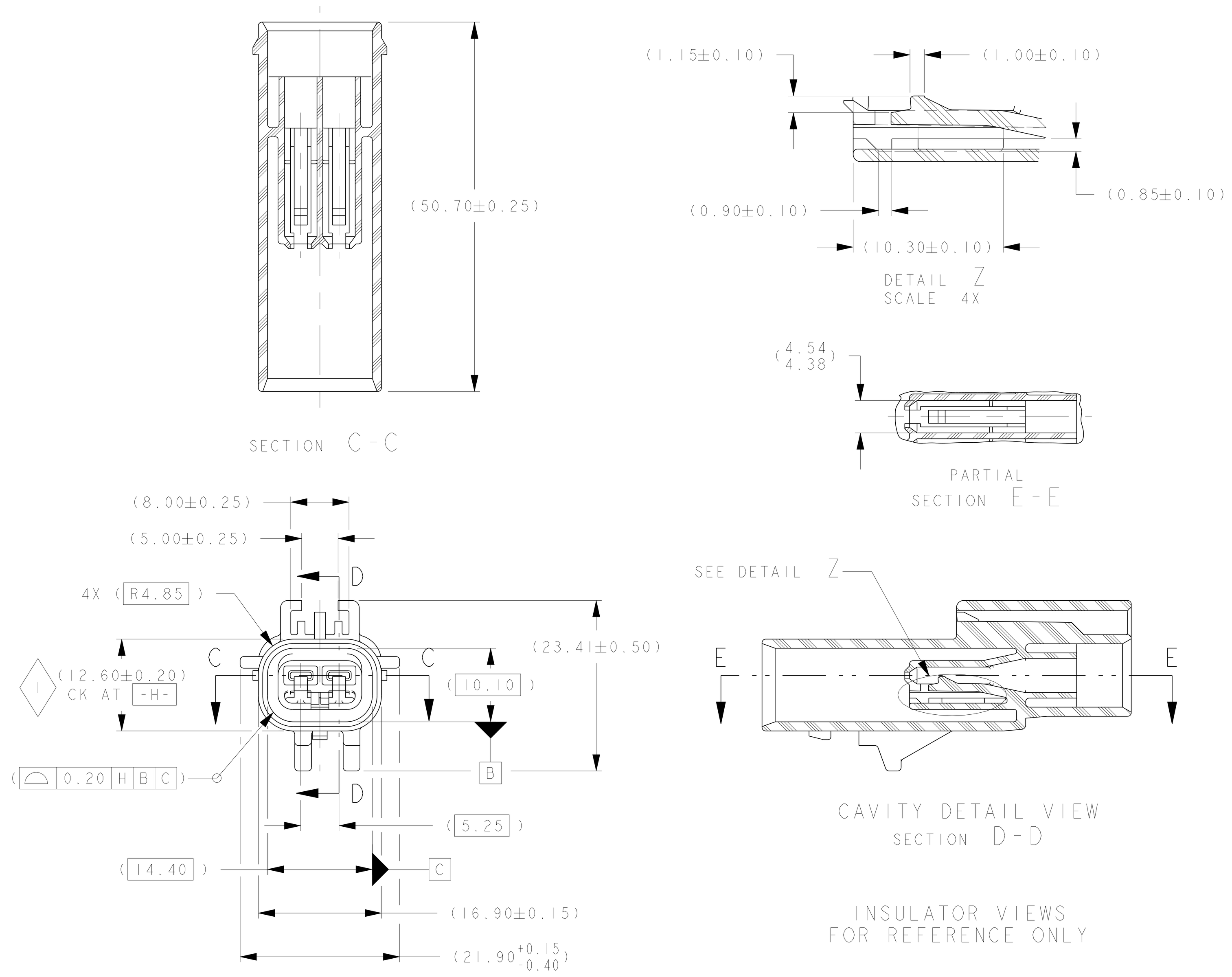

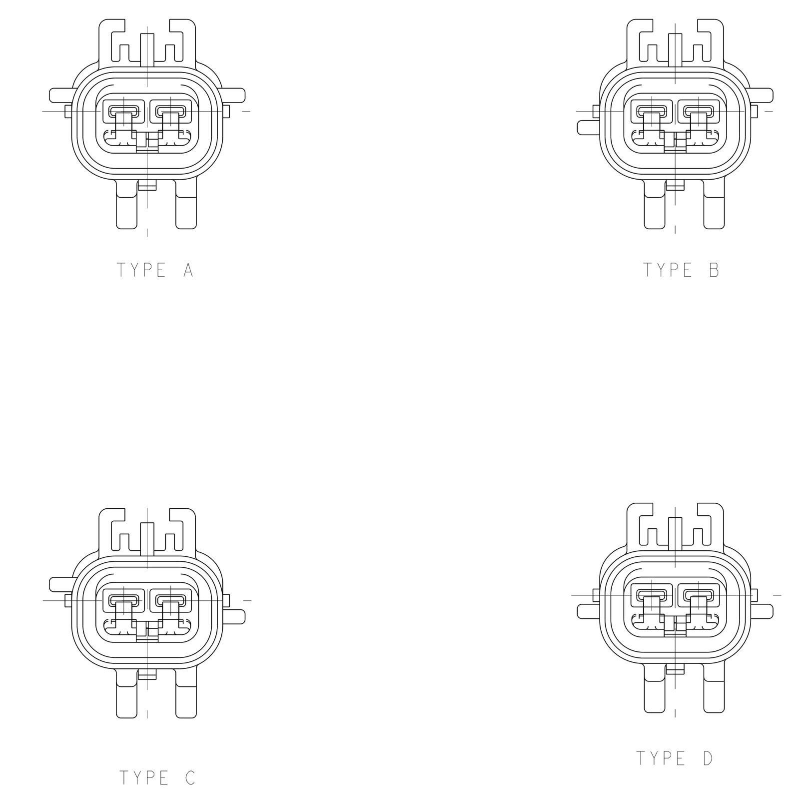

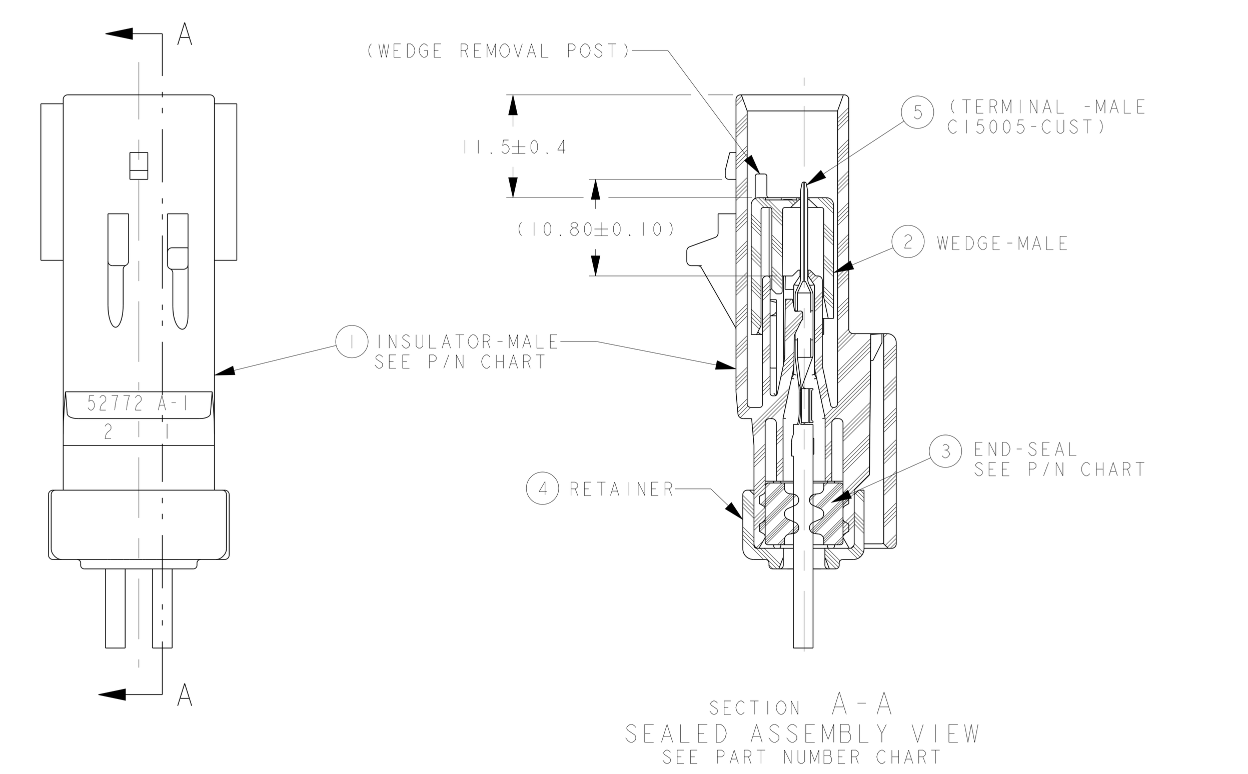

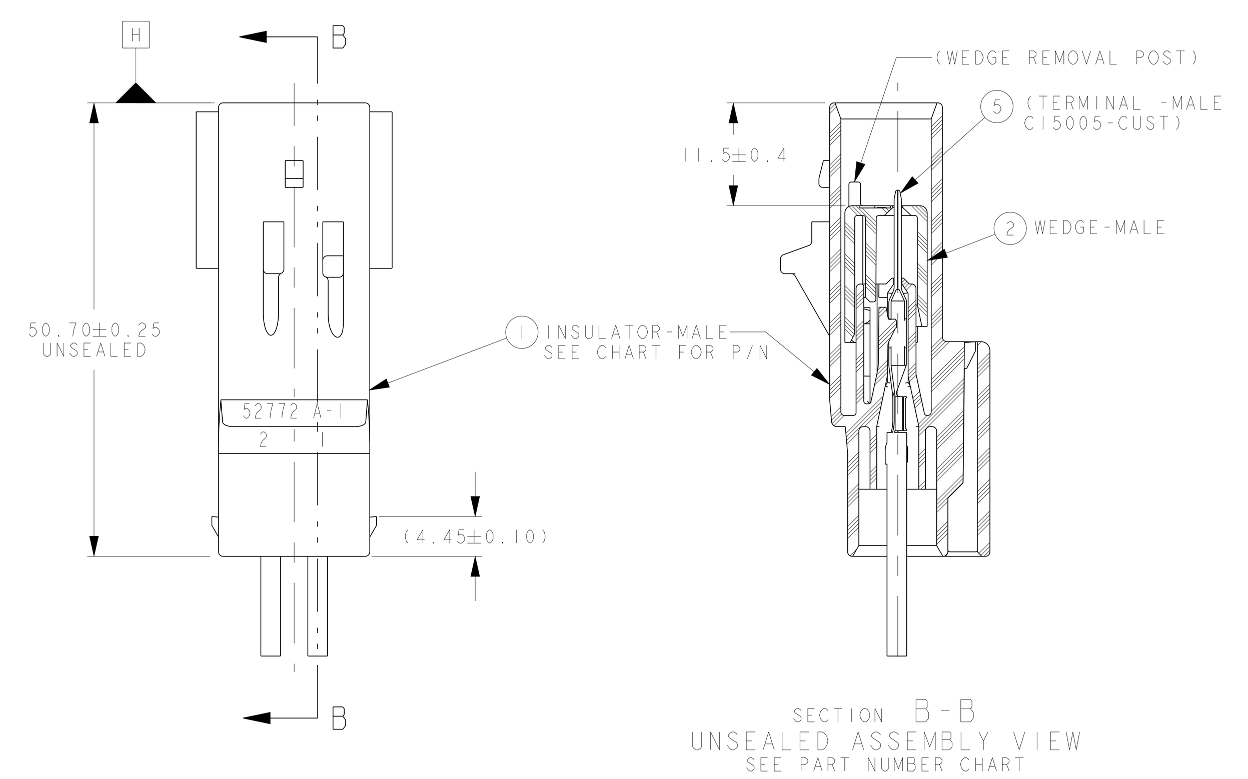

MATING PART NUMBERS CHART FOR REFERENCE

INDEX TYPE	COLOR	SEALED/ UNSEALED	MALE ASSEMBLY PART NOS. FCI	MALE ASSEMBLY PART NOS. CUSTOMER	MALE ASSEMBLY PART NOS. YNA	FEMALE ASSEMBLY PART NOS. FCI	FEMALE ASSEMBLY PART NOS. CUSTOMER	FEMALE ASSEMBLY PART NOS. YNA
D	NATURAL	UNSEALED	55200209	DIRECT CONNECT APPLICATION	N/A	54200203N	N/A	N/A
		UNSEALED	55200209	DIRECT CONNECT APPLICATION	N/A	54200203	C 04687920	7283-5373
	TAN	SEALED	F380510	N/A	N/A	F970510	N/A	N/A
		SEALED	54200276	DIRECT CONNECT APPLICATION	N/A	54200262	N/A	N/A
	NATURAL	SEALED	55200205	DIRECT CONNECT APPLICATION	N/A	54200209N	N/A	N/A
		SEALED	55200205	DIRECT CONNECT APPLICATION	N/A	54200209	C 04687916	7283-5375
C	DK GREY	UNSEALED	55200208	DIRECT CONNECT APPLICATION	N/A	54200202N	N/A	N/A
		UNSEALED	55200208	DIRECT CONNECT APPLICATION	N/A	54200202	C 04687919	7283-5372-10
	DK BROWN	SEALED	F280510	N/A	N/A	F870510	N/A	N/A
		SEALED	54200275	DIRECT CONNECT APPLICATION	N/A	54200261	N/A	N/A
	DK GREY	SEALED	55200204	DIRECT CONNECT APPLICATION	N/A	54200208N	N/A	N/A
		SEALED	55200204	DIRECT CONNECT APPLICATION	N/A	54200208	C 04687914	7283-5374-10
B	LT GREY	UNSEALED	54200205	N/A	N/A	54200201N	N/A	N/A
		UNSEALED	54200205	C 04687924	N/A	54200201	C 04687918	7283-5371-40
	DK BLUE	SEALED	F180510	N/A	N/A	F770510	N/A	N/A
		SEALED	54200274	N/A	N/A	54200260	N/A	N/A
	LT GREY	SEALED	54200211	N/A	N/A	54200207N	N/A	N/A
		SEALED	54200211	C 04687922	N/A	54200207	C 04687913	7283-5359-40
A	LT GRN	UNSEALED	DIRECT CONNECT APPLICATION			54200251	C 04868293AA	N/A
		SEALED	54200233	N/A	N/A	54200212N	N/A	N/A
		SEALED	54200233	C 04868173AA	N/A	54200212	C 04688917	7283-5367-60
	BLACK	UNSEALED	54200204	N/A	N/A	54200200N	N/A	N/A
		UNSEALED	54200204	C 04687923	N/A	54200200	C 04688917	7283-5358-30
		SEALED	54200210	C 04687921	7282-5292-30	54200206	C 04687912	7283-5292-30
		SEALED	54200215	N/A	N/A	54200213N	N/A	N/A
		SEALED	54200215	C 04793833	N/A	54200213	C 04793832	N/A
		SEALED	DIRECT CONNECT APPLICATION			54200214N	C 56021913AA	7283-6210-30
	DK GRN	SEALED	F080510	N/A	N/A	F670510	N/A	N/A
		SEALED	54200273	N/A	N/A	55200200	N/A	7283-8377-60
		SEALED	54200273	N/A	N/A	55200200N	N/A	N/A

CUSTOMER LEGENDS:
CHRYSLER: C
FORD: F
GENERAL MOTORS: GM
YAZAKI NA: Y

CHART- ASSEMBLY PART NUMBERS (TEMPERATURE CLASS 3) / CHART-ASSEMBLY PART NUMBERS SEALED (TEMPERATURE CLASS 4)

FCI P/N'S	54200204	54200205	55200208	55200209	54200210	54200211	54200215	54200233	55200204	55200205	FCI NO.	(CHRYSLER)	COLOR	ITEM	PART NAME (MATERIAL)	INDEX	FCI NO.	COLOR	54200273	54200274	54200275	54200276	F080510	F180510	F280510	F380510
CUSTOMER P/N'S	C 04687923	C 04687924	N/A	N/A	C 04687921	C 04687922	C 04793833	C 04868173AA	N/A	N/A																
CUSTOMER P/N'S	N/A	N/A	N/A	N/A	Y 7282-5292-30	N/A	N/A	N/A	N/A	N/A																
REQUIRED	1				1		1				54200224	04687792	BLACK	1	INSULATOR PA66GF	A	54200267	DK GREEN	1				1			
REQUIRED								1			54200232	N/A	LT GREEN	1	INSULATOR PA66GF	A	X	X	X	X	X	X	X	X	X	X
REQUIRED		1				1					54200226	04687937	LT GREY	1	INSULATOR PA66GF	B	54200268	DK BLUE		1				1		
REQUIRED			1						1		55200206	N/A	DK GREY	1	INSULATOR PA66GF	C	54200269	DK BROWN			1				1	
REQUIRED				1						1	55200207	N/A	NATURAL	1	INSULATOR PA66GF	D	54200270	TAN				1				1
REQUIRED	1	1	1	1	1	1	1	1	1	1	54200235	04687978	RED	2	WEDGE (TPA) PA66GF	X	54200298	NATURAL	1	1	1	1	1	1	1	1
REQUIRED	X	X	X	X	1	1		1	1	1	54200239	04687942	LT BLUE	3	END SEAL SILICONE	X	54200240	LT GREEN	1	1	1	1	X	X	X	X
REQUIRED	X	X	X	X			1				54200241	04687943	BURNT ORANGE	3	END SEAL SILICONE	X	F480510	OFF WHITE	X	X	X	X	1	1	1	1
REQUIRED	X	X	X	X	1	1	1	1	1	1	54200234	04687938	BLACK	4	RETAINER PA66GF	X	54200271	NATURAL	1	1	1	1	1	1	1	1
	3	3	3	3	3	3	3	3	3	3	CONNECTOR ASSEMBLY TEMPERATURE CLASS PER SAE/USCAR-2 REV.5								4	4	4	4	4	4	4	4
	H	H	M	M	H	H	H	J	M	M	PART CHANGE LEVEL (PCL)								A	M	M	M	P	P	P	P

SEE NOTE 13 (54200240 / F480510 rows)

NOTES:

1. QUALITY ASSURANCE REQUIREMENTS PER CHRYSLER PS-7300: 1 SPC DATA REQUIRED

2. ENGINEERING APPROVAL OF SUPPLIER SAMPLES IS REQUIRED PRIOR TO AUTHORIZATION OF PART PRODUCTION

3. CHANGES IN DESIGN COMPOSITION OR PROCESSING FROM THE PART PREVIOUSLY APPROVED FOR PART PRODUCTION REQUIRES PRIOR ENGINEERING APPROVAL

4. WIRING FABRICATORS MUST PURCHASE FROM SOURCES SHOWN

5. ALL THE SEALED CONNECTOR APPLICATIONS MUST BE USED WITH CHRYSLER WIRE SPEC. MS-8288, MS-9502 OR ISO 6722 EQUIVALENTS THIN WALL X-LINK ONLY
   A- ASSEMBLIES WITH FCI P/N'S 54200239 OR 54200240 END SEALS MUST BE USED WITH 20 TO 14AWG OR ISO EQUIVALENTS WIRES WITH INSULATION Ø1.70 TO Ø2.77 O.D.
   B- ASSEMBLIES WITH FCI P/N'S 54200241 OR F480510 END SEALS MUST BE USED WITH 14 TO 10AWG OR ISO EQUIVALENTS WIRES WITH INSULATION Ø2.50 TO Ø4.09 O.D.

6. ALL NON-SEALED APPLICATIONS MAY BE USED WITH ANY WIRE INSULATION 22 TO 10AWG OR ISO EQUIVALENTS (EXCEPT AS NOTED BELOW) PROVIDED THAT A TERMINAL GRIP FOR THAT CORE/INSULATION IS SHOWN ON C15005-CUST MALE TERMINAL DRAWING

   NOTE: MAX. INSULATION CRIMP WIDTH = 4.50
   MAX. INSULATION CRIMP HEIGHT = 4.50
   MAX. INSULATION CRIMP DIA. = 4.09 (10 GA THIN WALL)

7. USE WITH FOLLOWING APPLICABLE COMPONENTS AS NEEDED:
   CAVITY PLUG FCI P/N 54200005 (CHRYSLER P/N 56038308)
   DOUBLE X-MAS TREE CLIP FCI P/N 54200010 W/FORWARD STOP
   DOUBLE X-MAS TREE CLIP CHRYSLER P/N 04707091
   SINGLE X-MAS TREE CLIP CHRYSLER P/N 04625797
   2.80MM APEX MALE TERMINAL PER FCI C15005-CUST SYMMETRICAL ABOUT CENTERLINES FOR 180° ORIENTATION

8. TEST METHOD PER PERFORMANCE SPEC# SAE/USCAR-2 REV.5, CONNECTOR ENGAGE & DISENGAGE WITH FEMALE LATCH DEPRESSED FORCE NOT TO EXCEED 75N FOR THIS SYSTEM

   WEDGE SEATING FORCES - 100N MAX

   X-MAS TREE CLIP INSERTION FORCES - 75N MAX

9. FCI SUPPLIER CODE 52772, MOLD & CAVITY I.D. SIGNIFIES TOOL OWNERSHIP, FOR REFERENCE

10. ANNUAL QUALITY REQUIREMENTS:
    IT IS PERMISSIBLE TO PERFORM CONTINUOUS CONFORMANCE PER FCI SPECIFICATION #AQA-001 INSTEAD OF ANNUAL LAYOUT & ANNUAL PV REQUIREMENTS OF QS-9000 SECTION 2 & SAE/USCAR-2 REV.5

    ALL NON-REFERENCE DIMENSIONS ARE REQUIRED

    - USE INDEX A, BLACK SEALED AND UNSEALED FOR ALL AFFECTED INSULATOR CAVITIES
    - CURRENT PRODUCTION TOOLING
    - POINT OF LAST RUN

    SERVICE TOOLING GUIDE INFORMATION PER APEX TRAINING MANUAL

11. MUST CONFORM TO THE FOLLOWING CHRYSLER/YNA STANDARDS:

    SAE/USCAR-2 REV.5
    PS-7300 QUALITY ASSURANCE (CHRYSLER)
    PS-9227 DATA EXCHANGE (CHRYSLER), (G009-7 YNA)
    PS-10052 INFORMATION SECURITY (CHRYSLER)

12. THIS DRAWING (H59010) REPLACES CHRYSLER DRAWING NUMBER 04687875 LEVEL "K", CHRYSLER DRAWING IS FOR REFERENCE ONLY FOR PREVIOUS CHANGES

13. P/N'S 54200240 AND F480510 BAKED AT 450°F FOR 5 HOURS TO DRIVE OFF VOLITILES

ECN-NO.	ZONE	CHANGE DESCRIPTION
12-01348	F8	APPLICABLE WIRE NOTES REVISED FOR METRIC EQUIVALENT, WIRE APPLICATION FOR 54200241 END SEAL CHANGED TO 14 TO 10AWG
12-1026	E10 B23	CONNECTOR ASSEMBLIES P/N'S F080510 TO F380510 AND END SEAL P/N F480510 ADDED FOR TEMP CLASS 4 10/12AWG APPLICATIONS. CORRECTED P/N'S 54200273 TO 54200276 WERE SWITCHED IN ERROR AT REV.N. ASSEMBLY P/N CHARTS UPDATED. NOTES UPDATED AND #13 ADDED
12-00884	ALL	REVISED AND REDRAWN IN PDS SEE REV M3 FOR PREVIOUS CHANGES PCL NOT AFFECTED

PRODUCT SPEC.: APEX 2.8 | PACKAGING SPEC.: - | APPLICATION SPEC.: -

THIS DRAWING AND ALL OTHER INFORMATION CONTAINED THEREIN IS PROPRIETARY AND THE PROPERTY OF FCI. This drawing may not be copied, reproduced or disclosed to any third party without the expressed written permission of FCI. FCI April © 1999

TOLERANCES: ±0.1 ±2°
COUNTERPART Nr.: H59000 & H59002
DO NOT MEASURE DRAWING
MATERIAL: SEE CHART | SURFACE FINISH: -
COLOUR: SEE CHART | -
TOOL NO.: A043 | ECO Loc. Code: AN
3RD ANGLE | DIMENSION IN MILLIMETERS
CAD SYSTEM: pro / eng. | DWG SIZE: A0

	DATE	NAME
CREATED BY	2006-02-28	S.YUVARAJ
MODIFIED BY	2012/10/18	Sucha SIAN
CHECKED BY	2012/10/18	Robert BAUMAN
APPROVED BY	2012/10/18	Jeff CAMPBELL

FILE NAME: H59010
TITLE: CHART - ASSEMBLY 2-WAY MALE
PROJECT: 2.8 APEX CONNECTOR SYSTEM
ESR NO.: USA-WT234 | CAT. NO.: -
DOCUMENT UNDER PDS CONTROL NO MODIFICATION ALLOWED OUTSIDE
DRAWING NUMBER: H59010 | REV.: R
STATE: SERIAL RELEASED
PART NUMBER: See Table | REV.: -
APPROVAL LEVEL: - | SHEET: 1 of 1 | SCALE 2:1

EUR C04 112 F29 PDS

Компания «ЭлектроПласт» предлагает заключение долгосрочных отношений при поставках импортных электронных компонентов на взаимовыгодных условиях!

Наши преимущества:

- Оперативные поставки широкого спектра электронных компонентов отечественного и импортного производства напрямую от производителей и с крупнейших мировых складов;
- Поставка более 17-ти миллионов наименований электронных компонентов;
- Поставка сложных, дефицитных, либо снятых с производства позиций;
- Оперативные сроки поставки под заказ (от 5 рабочих дней);
- Экспресс доставка в любую точку России;
- Техническая поддержка проекта, помощь в подборе аналогов, поставка прототипов;
- Система менеджмента качества сертифицирована по Международному стандарту ISO 9001;
- Лицензия ФСБ на осуществление работ с использованием сведений, составляющих государственную тайну;
- Поставка специализированных компонентов (Xilinx, Altera, Analog Devices, Intersil, Interpoint, Microsemi, Aeroflex, Peregrine, Syfer, Eurofarad, Texas Instrument, Miteq, Cobham, E2V, MA-COM, Hittite, Mini-Circuits,General Dynamics и др.);

Помимо этого, одним из направлений компании «ЭлектроПласт» является направление «Источники питания». Мы предлагаем Вам помощь Конструкторского отдела:

- Подбор оптимального решения, техническое обоснование при выборе компонента;
- Подбор аналогов;
- Консультации по применению компонента;
- Поставка образцов и прототипов;
- Техническая поддержка проекта;
- Защита от снятия компонента с производства.

Как с нами связаться

Телефон: 8 (812) 309 58 32 (многоканальный)
Факс: 8 (812) 320-02-42
Электронная почта: org@eplast1.ru
Адрес: 198099, г. Санкт-Петербург, ул. Калинина, дом 2, корпус 4, литера А.