SOLARLOK
Photovoltaic Interconnection System

Tyco Electronics

Table of Contents

The SOLARLOK Concept 1
Large Junction Box – Serial Interconnection 2
5-Rail Junction Box – Serial Interconnection 3
Medium Junction Box – Serial Interconnection 4
Small Junction Box – Serial Interconnection 6
Eco Junction Box – Serial Interconnection 7
Slim Junction Box – Serial Interconnection 8
Micro Junction Box – Serial Interconnection 9
Junction Boxes for Building integrated PV Applications (BiPV) 10
Solar Labels 12
Combiner Box 13
Cable Coupler – Standard Line 14
Cable Coupler – Slim Line 15
T-Branch Connector 16
DC Converter Receptacle 17
AC Inverter Connector 18
Field Wiring, Switching and Protection 19
Solar Cable – TÜV and UL certified 20
Solar Cable, 1-Pole 21
Wiring Example with Extension Cables 22
Grounding Solutions 23
Interconnection Examples 24
Application Tooling 26
Contacts 28
Assembly and Installation Guidelines 29
Technical Data 33
Numerical Index 34
Restriction on the Use of Hazardous Substances (RoHS) 36

Product Information Center (PIC)

Our PIC team are there to help with any further questions.

With our experienced employees in the Product Information Center (PIC) we can offer you a reliable source of information and support for your technical queries.

To contact your local Tyco Electronics subsidiary, please refer to the address page at the back of this catalog.

Product und Machine Literature

Order quickly and easily by fax:

For Fax No. see address page entry for your specific region.

A large product range has extensive product literature.
You can request flyers, catalogs and brochures for each of the product sectors of relevance to you.

Tyco Electronics Online

Internet Homepage:
www.tycoelectronics.com/solar

Electronic Internet Catalog:
http://catalog.tycoelectronics.com

Our website is more than an Internet guide. It is constantly being added to and is an innovative and interactive source for applications tips, product updates and technical information of all types. With our innovative StepSearch software, which has been perfected over a period of several years you can conveniently surf your way through all our products.

The SOLARLOK Concept

System Features

Junction Box

- Variable wiring options
- Easily accessible
- Simple, fast and cost-effective assembly
- Flat, low profile design
- High current carrying capacity
- Good thermal balance
- Connectorized or direct wire configurations
- Up to four outputs possible
- Up to six internal rails
- Customer-specific solutions
- TÜV and UL approved

Connector

- Simple on-site processing
- Mating safety provided by keyed housings
- Semi-automatic assembly capability possible
- Multiple plugging and unplugging cycles
- Accomodates solar cable with different insulation diameters
- High current carrying capacity
- Wide temperature operating range
- TÜV and UL approved

Solar Cable

- Dual wall insulation
- Electron beam cross-linked
- Excellent resistance to U.V., water, ozone, fluids, salt, general weathering
- Excellent resistance to abrasion
- Halogen free, flame retardant, low toxicity
- Very low smoke emissions
- Excellent flexibility and stripping performance
- Different cable diameters
- Operating Temperature from –40 °C up to +125 °C
- Voltage Rating up to 1800 V DC
- Short circuit resistant up to +250 °C
- TÜV and UL approved

Simple and Reliable System Interconnection of Individual Solar Modules Right to the DC/AC Converters

Market expansion of the formerly regulated energy supply sector, increased global environmental awareness and governments committing themselves to more stringent environmental targets have opened up new opportunities for the photovoltaic industry.

Having served a niche market in the past, the photovoltaics industry now has the opportunity to move into mass production, realizing economies of scale and gaining a greater market share of the world's energy mix.

Tyco Electronics will be contributing to the establishment of this environmentally-friendly technology with the introduction of its SOLARLOK connector system.

SOLARLOK delivers a flexible system solution for easy and reliable interconnections from photovoltaic modules to the DC/AC converter. The entire system concept is based on cost-effective and reliable processing of individual interconnection system components. This significantly reduces installation costs of the solar energy system.

The junction box concept is based on a flexible, open system structure, which allows serial as well as parallel interconnection via direct wire connect or separable connectors. Within the junction box, up to six termination places rails are available for photovoltaic foil connection.

The male and female cable coupler was designed for high voltage and high current-carrying capacity in addition to the well-established IP 67 sealing requirement in the photovoltaic industry. Mating safety is provided by polarity keyed housings, fully shrouded contacts, reliable high cycle life, and squeeze to release connection system. In addition, a wide temperature range and fulfillment of worldwide standards for photovoltaic connection systems complement the robust product specification.

The design of the male and female receptacle for the junction box and the DC/AC converter follow the cable coupler "click philosophy" for quick and secure mating even in difficult mounting positions.

If required by the customer, the junction box can be delivered pre-configured with diodes, jumpers, plug connectors, and solar cable pigtails.

Large Junction Box – Serial Interconnection

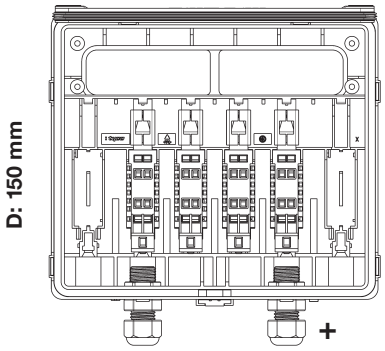

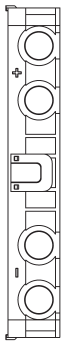

All mentioned versions are standard. Plus-connection see drawing.

Junction Box with Mounted Cable and Connectors

Part Number	Contact Rails	Diodes	Rated Current (IEC 61215, Edition 2) (Ampere)	Cable Length (mm)	Wire Size (mm^2)
1740300-2	6	5	6.0	1,000	4.0
1987294-2	6	5	8.5	1,000	4.0
1987254-2	6	5	13.0	1,000	4.0
1740077-1	4	3	6.0	1,000	4.0
1740077-3	4	3	8.5	1,000	4.0
on request	4	3	13.0	1,000	4.0

Junction Box with Connector Outlet

Part Number	Contact Rails	Diodes	Rated Current (IEC 61215, Edition 2) (Ampere)
3-1394723-0	6	5	6.0
6-1394723-5	6	5	8.5
6-1394723-6	6	5	13.0
2-1394723-4	4	3	6.0
on request	4	3	8.5
5-1394723-3	4	3	13.0

Junction Box with Extended Wiring Space

Special Versions

Part Number	Contact Rails	Diodes	Rated Current (IEC 61215, Edition 2) (Ampere)	Cable Length (mm)	Wire Size (mm^2)	Comments
1981988-1	6	5	8.5	1,000	4.0	Junction Box with extended wiring space
1981987-1	6	5	13.0	1,000	4.0	

Standard mounting on the panel with silicone glue (approved types see application specification). Optional with double-sided adhesive tape (specifications of the adhesive tape can be found in the datasheets of the manufacturer).

All dimensions are in millimeters unless otherwise specified. All specifications subject to change.
Consult Tyco Electronics for latest specifications.

5-Rail Junction Box – Serial Interconnection

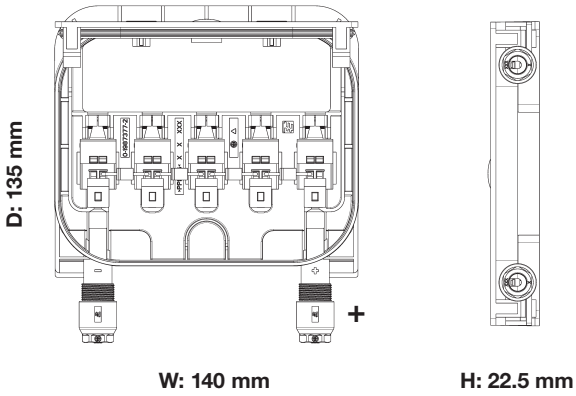

All mentioned versions are standard. Plus-connection see drawing.
TÜV and UL pending.

Junction Box with Mounted Cable and Connectors

Part Number	Contact Rails	Diodes	Rated Current (IEC 61215, Edition 2) (Ampere)	Cable Length (mm)	Wire Size (mm^2)
1987858-3	5	4	8.5	1,000	4.0
1987982-3	5	4	13.0	1,000	4.0

Junction Box with Connector Outlet

Part Number	Contact Rails	Diodes	Rated Current (IEC 61215, Edition 2) (Ampere)
on request	5	4	8.5
on request	5	4	13.0

Standard mounting on the panel with silicone glue (approved types see application specification).
Optional with double-sided adhesive tape (specifications of the adhesive tape can be found in the datasheets of the manufacturer).

Medium Junction Box – Serial Interconnection

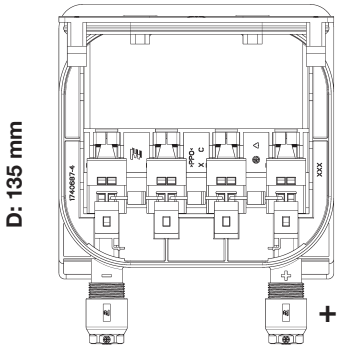

All mentioned versions are standard. Plus-connection see drawing.

Junction Box with Mounted Cable and Connectors

Part Number	Contact Rails	Diodes	Rated Current (IEC 61215, Edition 2) (Ampere)	Cable Length (mm)	Wire Size (mm^2)
1987002-4	4	3	6.0	1,000	4.0
1740699-6	4	3	8.5	1,000	4.0
1740971-2	4	3	13.0	1,000	4.0

Junction Box with Connector Outlet

Part Number	Contact Rails	Diodes	Rated Current (IEC 61215, Edition 2) (Ampere)
1987003-3	4	3	6.0
1740700-1	4	3	8.5
1740972-1	4	3	13.0

Standard mounting on the panel with silicone glue (approved types see application specification). Optional with double-sided adhesive tape (specifications of the adhesive tape can be found in the datasheets of the manufacturer).

All dimensions are in millimeters unless otherwise specified. All specifications subject to change.
Consult Tyco Electronics for latest specifications.

Medium Junction Box – Serial Interconnection – Special Versions

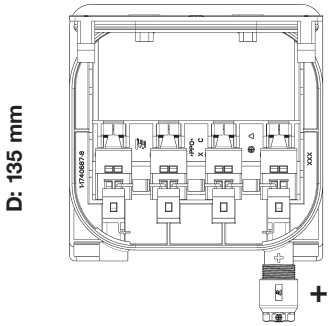

All mentioned versions are standard. Plus-connection see drawing.

Junction Box with Mounted Cable and Connectors

Part Number	Contact Rails	Diodes	Rated Current (IEC 61215, Edition 2) (Ampere)	Cable Length (mm)	Wire Size (mm^2)	Comments
3-1740699-9	4	3	8.5	1,000	4.0	Male Contact (neutral) right, left closed
3-1740699-8	4	3	8.5	1,000	4.0	Female Contact (neutral) left, right closed
1987994-1	4	3	13.0	1,000	4.0	Male Contact (neutral) right, left closed
1987995-1	4	3	13.0	1,000	4.0	Female Contact (neutral) left, right closed

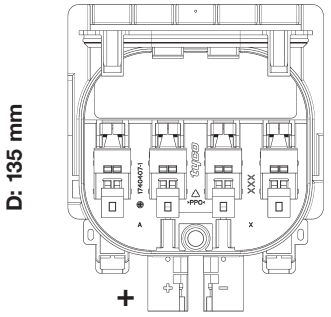

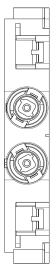

Inside Style

Part Number	Contact Rails	Diodes	Rated Current (IEC 61215, Edition 2) (Ampere)	Cable Length (mm)	Wire Size (mm^2)	Comments
1740657-8	4	3	8.5	1,000	4.0	with Mounted Cable
1740658-1	4	3	8.5	1,000	4.0	with Connector Outlet

Standard mounting on the panel with silicone glue (approved types see application specification). Optional with double-sided adhesive tape (specifications of the adhesive tape can be found in the datasheets of the manufacturer).

Small Junction Box – Serial Interconnection

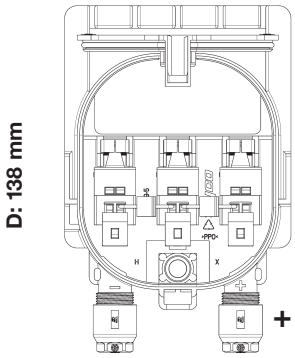

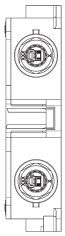

All mentioned versions are standard. Plus-connection see drawing.

Junction Box with Mounted Cable and Connectors

Part Number	Contact Rails	Diodes	Rated Current (IEC 61215, Edition 2) (Ampere)	Cable Length (mm)	Wire Size (mm^2)
1740425-5	3	2	6.5	1,000	4.0
1987225-6	3	2	10.5	1,000	4.0
1987252-1	3	2	14.0	1,000	4.0

Junction Box with Connector Outlet

Part Number	Contact Rails	Diodes	Rated Current (IEC 61215, Edition 2) (Ampere)
1418867-6	3	2	6.5
1987459-1	3	2	10.5
1987777-1	3	2	14.0

Standard mounting on the panel with silicone glue (approved types see application specification). Optional with double-sided adhesive tape (specifications of the adhesive tape can be found in the datasheets of the manufacturer).

All dimensions are in millimeters unless otherwise specified. All specifications subject to change.
Consult Tyco Electronics for latest specifications.

Eco Junction Box – Serial Interconnection

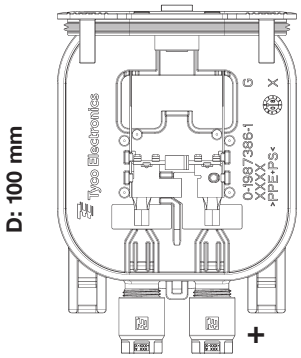

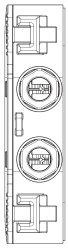

All mentioned versions are standard. Plus-connection see drawing.
TÜV and UL pending.

Junction Box with Mounted Cable and Standard Connectors

Part Number	Contact Rails	Diodes	Rated Current (IEC 61215, Edition 2) (Ampere)	Cable Length (mm)	Wire Size (mm^2)	Foil Connection
1987392-1	2	1	8	1,000	4.0	Straight
1987392-2	2	1	8	1,000	4.0	Angled

Junction Box with Mounted Cable, Slim Line Connectors and Double-Sided Adhesive Tape

Part Number	Contact Rails	Diodes	Rated Current (IEC 61215, Edition 2) (Ampere)	Cable Length (mm)	Wire Size (mm^2)	Foil Connection
1987392-3	2	1	8	1,000	2.5	Straight

Standard mounting on the panel with silicone glue (approved types see application specification).
Optional with double-sided adhesive tape (specifications of the adhesive tape can be found in the datasheets of the manufacturer).

Slim Junction Box – Serial Interconnection

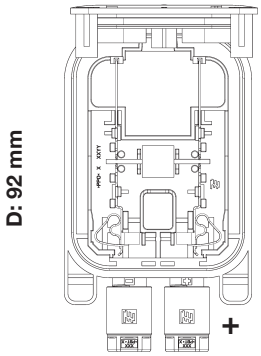

All mentioned versions are standard. Plus-connection see drawing.
UL pending.

Junction Box with Mounted Cable and Standard Connectors

Part Number	Contact Rails	Diodes	Rated Current (IEC 61215, Edition 2) (Ampere)	Cable Length (mm)	Wire Size (mm^2)
1971158-2	2	1	3	600	2.5

Junction Box with Mounted Cable and Slim Line Connectors

Part Number	Contact Rails	Diodes	Rated Current (IEC 61215, Edition 2) (Ampere)	Cable Length (mm)	Wire Size (mm^2)
on request	2	1	3	600	2.5

Standard mounting on the panel with silicone glue (approved types see application specification).
Optional with double-sided adhesive tape (specifications of the adhesive tape can be found in the datasheets of the manufacturer).

All dimensions are in millimeters unless otherwise specified. All specifications subject to change.
Consult Tyco Electronics for latest specifications.

Micro Junction Box – Serial Interconnection

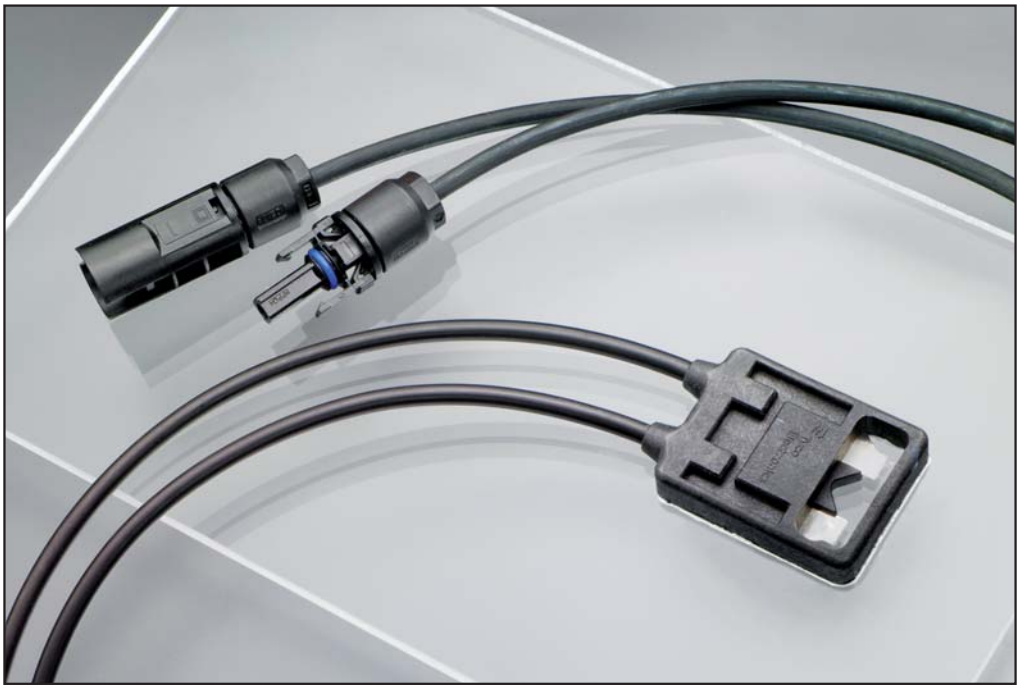

All mentioned versions
are standard.
Plus-connection see drawing.

TÜV pending.

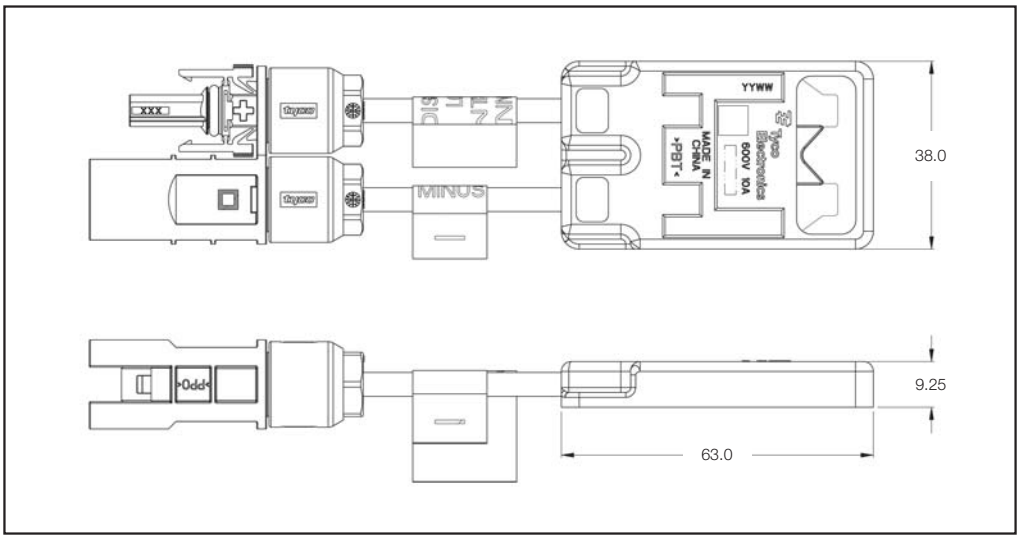

Micro Junction Box with Overmolded Cable

Part Number	Contact Rails	Diodes	Rated Current (IEC 61215, Edition 2) (Ampere)	Cable Length (mm)	Wire Size (AWG)
1954875-3	2	1	10	750	12

Standard mounting on the panel with silicone glue (approved types see application specification).
Optional with double-sided adhesive tape (specifications of the adhesive tape can be found in the datasheets of the manufacturer).

Junction Boxes for Building integrated PV Applications (BiPV)

Attention:

It is not permitted to use this product and products including it in the USA.

TÜV pending.

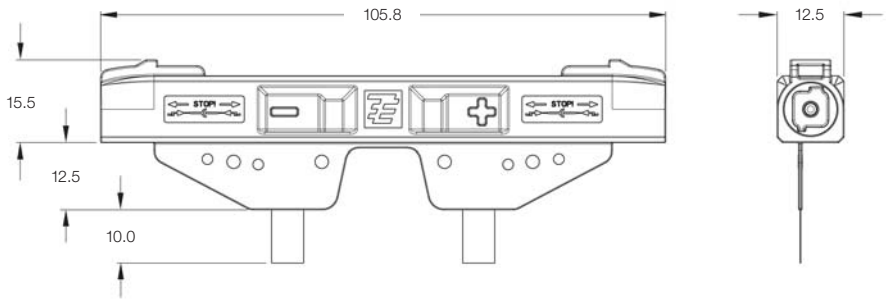

Wing-Edge Junction Box

Part Number	Diodes	Rated Current (IEC 61215, Edition 2) (Ampere)	Connection Type
1987293-3	1	10	with Slim Line Connector System (see Page 15)

All dimensions are in millimeters unless otherwise specified. All specifications subject to change.
Consult Tyco Electronics for latest specifications.

Junction Boxes for Building integrated PV Applications (BiPV) (continued)

Connection of foil by soldering. Required potting material please see application specification.

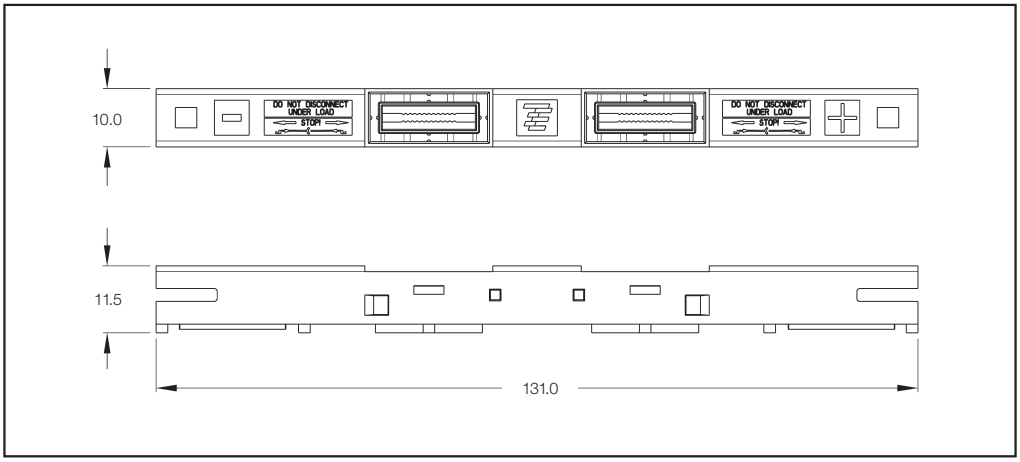

Straddle Edge Junction Box

Part Number	Diodes	Rated Current (IEC 61215, Edition 2) (Ampere)	Connection Type
1971569-1	1	11	Specific Connector System (see table below)

Accessories

Part Number	Description
1971131-1	Female Cable Coupler, Plus Contact
1971131-2	Female Cable Coupler, Minus Contact
1971133-1	Termination Connector

These specific Slim Connectors can be equipped with contacts of the SOLARLOK system on page 28.

Solar Labels

Product Features

- UV resistant
- Meet IEC61215 Edition 2.0, IEC61646 Edition 2.0
- UL- certified
- Withstand harsh outdoor environments
- Labels can be customized to customer requirements (design, logos, colors, specifications, etc.)

Product Description	Part Number	Label Description	Quantity on Roll
SOL-SD-104076-4-0.1	CN4616-000	Solar Disconnect	100
SOL-DCD-104100-4-0.1	CN4619-000	DC Disconnect	100
SOL-DPS-104019-4-0.1	CN4618-000	Warning – Dual Power Sources	100
SOL-ESH-104019-4-0.1	CN4617-000	Warning – Electric Shock Hazard	100
SOL-SD-104076-4-0.5	CL3803-000	Solar Disconnect	500
SOL-DCD-104100-4-0.5	CL3806-000	DC Disconnect	500
SOL-DPS-104019-4-0.5	CL3804-000	Warning – Dual Power Sources	500
SOL-ESH-104019-4-0.5	CL3805-000	Warning – Electric Shock Hazard	500

All dimensions are in millimeters unless otherwise specified. All specifications subject to change.
Consult Tyco Electronics for latest specifications.

Combiner Box

Product Features

- Combines up to 5 PV strings
- Converts to standard wires
- Completely pre-assembled
- Plug and play design provides labor savings and minimizes installer error during installation
- Uses existing products currently produced by Tyco Electronics
- UL 1741 pending
- No approval for use outside Americas!
- Part No. 1954283-1

SOLARLOK Combiner Box Assembly is used to combine up to five strings in a pre-terminated connectorized weather-resistant enclosure to meet National Electric Code (NEC) requirements for series fusing of photovoltaic (PV) modules (solar panels).

The combiner box assembly consists of a box, cover (with hinges), transparent dead front lid (under the cover), and 10 pre-terminated SOLARLOK connectors each with a removeable seal cover. The box features 4 knockouts (for output wiring), lock tab, mounting slots, and pre-wired grounding clip.

The interior of the box holds 5 fuse blocks pre-wired to the positive SOLARLOK connectors, 5 terminal blocks pre-wired to the negative SOLARLOK connectors, and an equipment terminal block used to ground the equipment. Fuses are not included.

Part No. **1954283-1**

Cable Coupler – Standard Line

Female Cable Coupler (Kit with Screw-Machined Contact)

Part Number	Wire Size (mm^2)	Keying	Package Quantity
1394462-1	2.5	Plus	100
1394462-3	4.0	Plus	100
5-1394462-5	6.0	Plus	100
1394462-2	2.5	Minus	100
1394462-4	4.0	Minus	100
5-1394462-6	6.0	Minus	100

Male Cable Coupler (Kit with Screw-Machined Contact)

Part Number	Wire Size (mm^2)	Keying	Package Quantity
1394461-1	2.5	Plus	100
1394461-3	4.0	Plus	100
6-1394461-5	6.0	Plus	100
1394461-2	2.5	Minus	100
1394461-4	4.0	Minus	100
6-1394461-6	6.0	Minus	100
6-1394461-1	2.5	Neutral	100
6-1394461-2	4.0	Neutral	100
6-1394461-4	6.0	Neutral	100

Female Cable Coupler (without Contact – only Housing and Sealing)

Part Number	Wire Size (mm^2)	Keying	Package Quantity
1740940-3	–	Plus	2,500
1740940-4	–	Minus	2,500

Male Cable Coupler (without Contact – only Housing and Sealing)

Part Number	Wire Size (mm^2)	Keying	Package Quantity
1740939-5	–	Plus	2,500
1740939-4	–	Minus	2,500
1740939-2	–	Neutral	2,500

All dimensions are in millimeters unless otherwise specified. All specifications subject to change.
Consult Tyco Electronics for latest specifications.

Cable Coupler – Slim Line

Female Cable Coupler (Kit with Screw-Machined Contact)

Part Number	Wire Size (mm^2)	Keying	Package Quantity
1987559-1	2.5	Plus	100
1-1987559-1	4.0	Plus	100
1987559-2	2.5	Minus	100
1-1987559-2	4.0	Minus	100

Male Cable Coupler (Kit with Screw-Machined Contact)

Part Number	Wire Size (mm^2)	Keying	Package Quantity
1987558-1	2.5	Plus	100
1-1987558-1	4.0	Plus	100
1987558-2	2.5	Minus	100
1-1987558-2	4.0	Minus	100
1987558-3	2.5	Neutral	100
1-1987558-3	4.0	Neutral	100

Female Cable Coupler (without Contact – only Housing and Sealing)

Part Number	Wire Size (mm^2)	Keying	Package Quantity
1987287-1	–	Plus	2,500
1987287-2	–	Minus	2,500

Male Cable Coupler (without Contact – only Housing and Sealing)

Part Number	Wire Size (mm^2)	Keying	Package Quantity
1987286-4	–	Plus	2,500
1987286-5	–	Minus	2,500
1987286-6	–	Neutral	2,500

TÜV and UL pending.

T-Branch Connector

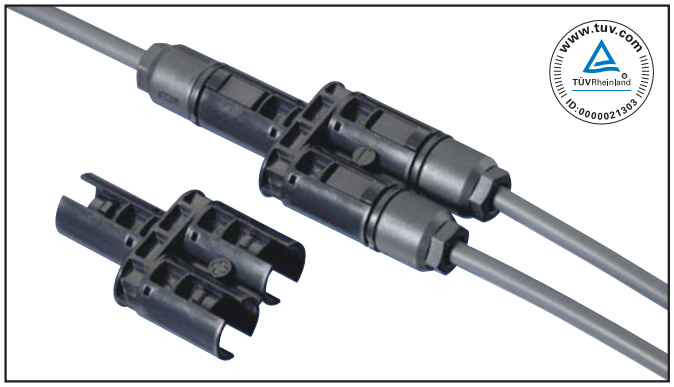

Parallel Interconnection using T-Branch Connector (Male-to-Male)

Part Number	Keying	Package Quantity
1534611-1	Plus	20
1534611-2	Minus	20

Parallel Interconnection using T-Branch Connector (Female-to-Male)

Part Number	Keying	Package Quantity
1740277-1	Plus	20
1740277-2	Minus	20

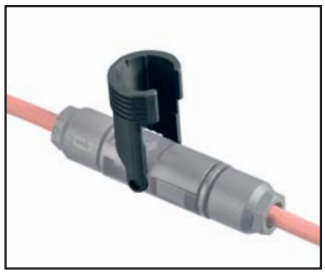

Standard

NEC/UL certified

Safety + Clip (Optional Connector Latch Locking Clip Standard)

Part Number	Keying	Package Quantity
1534226-1	Standard	100
2106207-1	NEC/UL certified	100

Connector Dust Covers

Part Number	Remarks	Package Quantity
1987423-1	for Female Cable Coupler	100
1394739-1	for Male Cable Coupler	100

All dimensions are in millimeters unless otherwise specified. All specifications subject to change.
Consult Tyco Electronics for latest specifications.

DC Converter Receptacle

With O-Ring and Metal Nut (Kit with Screw-Machined Contact)

Part Number	Wire Size (mm^2)	Keying	Package Quantity
1394738-1	2.5	Plus	100
1394738-3	4.0	Plus	100
1394738-9	6.0	Plus	100
1394738-2	2.5	Minus	100
1394738-4	4.0	Minus	100
1-1394738-0	6.0	Minus	100

With Flat Seal and Plastic Nut (Kit with Screw-Machined Contact)

Part Number	Wire Size (mm^2)	Keying	Flat Seal Color	Package Quantity
1740210-1	2.5	Plus	Black	100
1740210-3	4.0	Plus	Black	100
1740210-5	6.0	Plus	Black	100
1740210-2	2.5	Minus	Black	100
1740210-4	4.0	Minus	Black	100
1740210-6	6.0	Minus	Black	100
1740210-7	2.5	Plus	Red	100
1740210-9	4.0	Plus	Red	100
1-1740210-1	6.0	Plus	Red	100
1740210-8	2.5	Minus	Blue	100
1-1740210-0	4.0	Minus	Blue	100
1-1740210-2	6.0	Minus	Blue	100

AC Inverter Connector

Product Facts

- **Current Rating:** 25 A per Pole
- **Voltage Rating:** 400 V
- **Protection Degree:** IP67 (mated)
- **No. of Positions:** 5 Poles
- **Temperature Range:** –40 °C up to +50 °C
- **Wire Size Range:** 2.5–6.0 mm^2
- **Approvals:**
  - VDE certified

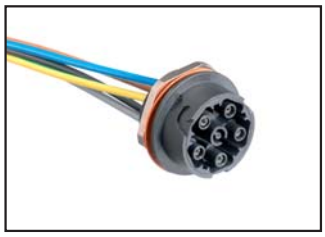

Panel Mount Plug

Part Number	Nut	Cable Length (5 x 4.0 mm^2)	Package Quantity
1740483-1	Metal	200 mm	24
1740483-2	Plastic	200 mm	24

Free Hanging Receptacle

Part Number	Nut	Cable Length (5 x 4.0 mm^2)	Package Quantity
1740479-1	–	–	24

Complete Sets

Part Number	Nut	Cable Length (5 x 4.0 mm^2)	Package Quantity
1740493-1	Metal	200 mm	24
1740493-2	Plastic	200 mm	24

All dimensions are in millimeters unless otherwise specified. All specifications subject to change.
Consult Tyco Electronics for latest specifications.

Field Wiring, Switching and Protection

Product Features

- Modular product concept
- One- / two-pole switches
- Current up to 60 A DC
- Voltage up to 1,000 V DC
- Compact, standardized design
- Proven quality
- TÜV and UL pending

Switching

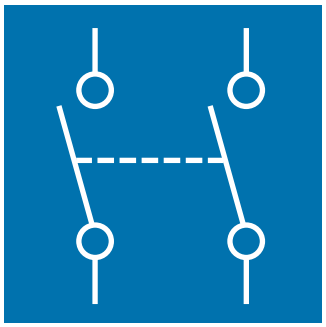

- One- / two-pole switch
- Main switch function
- Lockable
- Current up to 60 A DC
- Voltage up to 1,000 V DC

Collecting

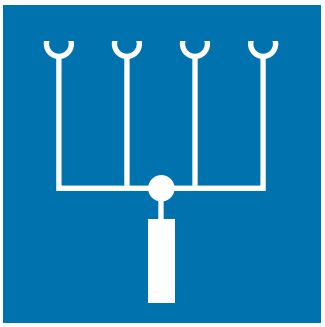

- 2 to 6 strings input
- Cable cross section up to 6 mm²
- SOLARLOK connectors
- Current up to 60 A DC
- Voltage up to 1,000 V DC

Protecting

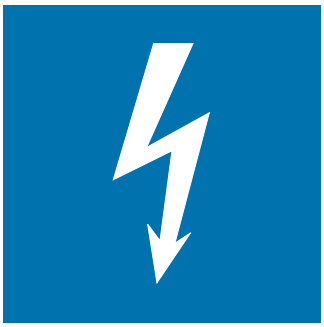

- Lightning protection

Your Solution

The photovoltaic integrator looks for best fit solutions to wire various types and sizes of solar generators.

The new product concept from Tyco Electronics provides this flexibility to photovoltaic integrators.

The modular product can be comprised of a switch, lightning protection, fuses or any combination of these or other commonly available components.

We can customize a product to fit your specific application. Please contact us with your requirements.

Solar Cable – TÜV and UL certified

Product Facts

- **Dual wall insulation**
- **Electron beam cross-linked**
- **Excellent resistance to UV, water, ozone, fluids, salt, general weathering**
- **Excellent resistance to abrasion**
- **Halogen free, flame retardant, low toxicity**
- **Very low smoke emissions**
- **Excellent flexibility and stripping performance**
- **Wire size from 2.5 mm² up to 6.0 mm²**
- **Safety Class II**
  - **TÜV approved (2Pfg1169/08.2007)**
  - **UL approved (Subject 4703)**

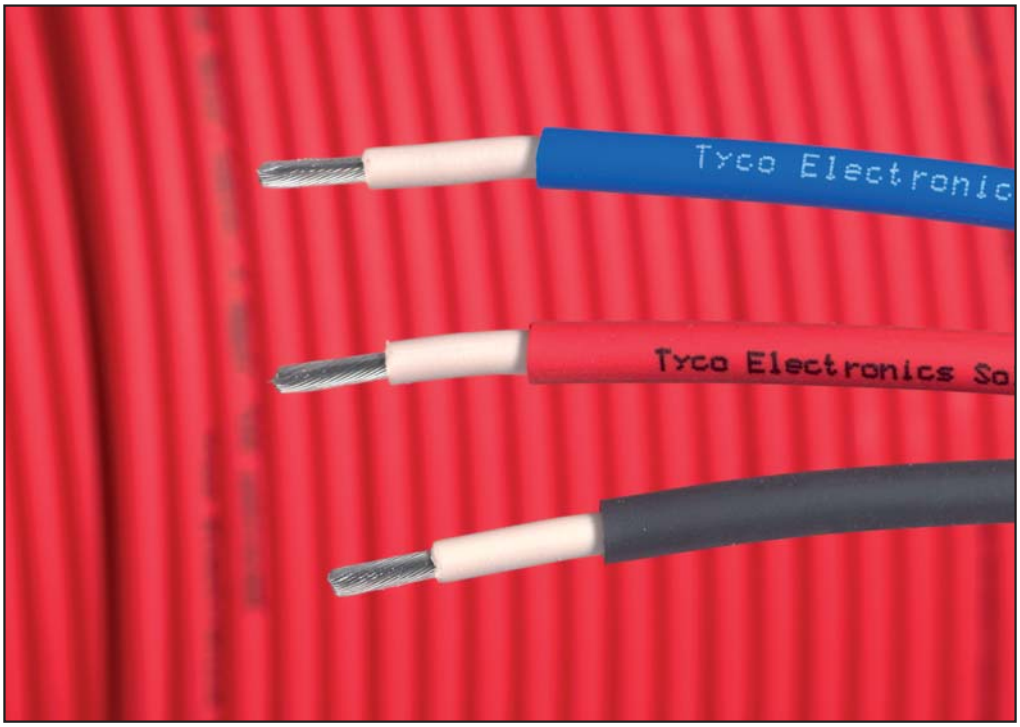

As part of expanding the SOLARLOK Product Line, Tyco Electronics has specified a wire that is designed to meet the harsh environmental conditions typical in the wiring of photovoltaic installations.

The flexible, dual wall, halogen free and cross linked solar wire offers long term stability and TÜV approval.

Its outstanding features include: high resistance against environmental conditions like humidity, UV-radiation and ozone.

In addition, it has excellent resistance to abrasion and temperature extremes.

The wire has a high dielectric withstand voltage and with its fine-stranded, tin plated copper conductor, it is easy to handle and to strip.

Standards

Approval:

- IEC 60228 Class 5 (stranded tin plated copper and flexible);
- TÜV certified according to 2Pfg1169/08.2007
- UL certified acc. Subject 4703

Additional, internal tests have been carried out.

Material and Finish

Conductor:
Stranded tin plated copper

Insulation:
Electron beam cross-linked Polyolefin

Sheath:
Electron beam cross-linked halogen free Polyolefin

Color:
Black, Blue, Red

Mechanical Features
(according TÜV requirements)

Max. Conductor Temperature
Continuous: +125 °C
At Short Circuit: +200 °C/5 s

Min. Operating Temperature
Free Installation: –40 °C
Fixed Installation: –60 °C

Wire Size Range:
2.5 mm² (AWG 14),
4.0 mm² (AWG 12),
6.0 mm² (AWG 10)

Min. Bending Radius:
5 x cable wire diameter, fixed installation

Electrical Features

Voltage Rating:
600/1,000 V AC / 1,800 V DC

Test Voltage for 5 Minutes:
6 kV

Max. Current Carrying Capacity (Free in Air):
2.5 mm² – 41 A
4.0 mm² – 55 A
6.0 mm² – 70 A

All dimensions are in millimeters unless otherwise specified. All specifications subject to change.
Consult Tyco Electronics for latest specifications.

Solar Cable, 1-Pole

- **TÜV approved (2Pfg1169/08.2007)**
- **UL approved (Subject 4703)**

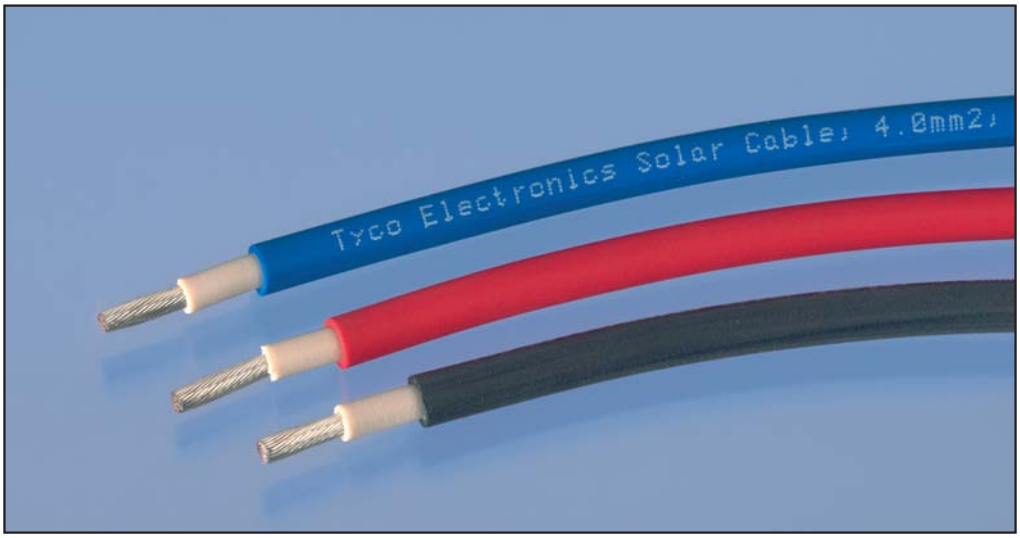

TÜV Approved (ZKLA)

Part Number	Cable Cross Section		Outer Diameter		Color	Package Quantity (m)
	(mm²)	(AWG)	(mm)	±Toleranz		
956297-4	2.5	14	6.65	+0.15/–0.10	Black	500
1-956297-4	2.5	14	6.65	+0.15/–0.10	Black	100
956297-5	2.5	14	6.65	+0.15/–0.10	Red	500
1-956297-5	2.5	14	6.65	+0.15/–0.10	Red	100
956297-6	2.5	14	6.65	+0.15/–0.10	Blue	500
1-956297-6	2.5	14	6.65	+0.15/–0.10	Blue	100
956298-4	4.0	12	6.90	+0.10/–0.10	Black	500
1-956298-4	4.0	12	6.90	+0.10/–0.10	Black	100
956298-5	4.0	12	6.90	+0.10/–0.10	Red	500
1-956298-5	4.0	12	6.90	+0.10/–0.10	Red	100
956298-6	4.0	12	6.90	+0.10/–0.10	Blue	500
1-956298-6	4.0	12	6.90	+0.10/–0.10	Blue	100
956299-4	6.0	10	7.35	+0.30/–0.25	Black	500
1-956299-4	6.0	10	7.35	+0.30/–0.25	Black	100
956299-5	6.0	10	7.35	+0.30/–0.25	Red	500
1-956299-5	6.0	10	7.35	+0.30/–0.25	Red	100
956299-6	6.0	10	7.35	+0.30/–0.25	Blue	500
1-956299-6	6.0	10	7.35	+0.30/–0.25	Blue	100

UL Approved (only USE-2)

Part Number	Cable Cross Section (AWG)	Outer Diameter (Inch)	Color	Package Quantity (Feet)
1986166-1	14	0.17	Black	7,500
1986166-2	14	0.17	Black	500
1986166-3	14	0.17	Black	2,500
1986165-1	12	0.19	Black	6,000
1986165-2	12	0.19	Black	500
1986165-3	12	0.19	Black	1,600
1986164-1	10	0.21	Black	5,500
1986164-2	10	0.21	Black	500
1986164-3	10	0.21	Black	1,000

For other Cross Sections (1.5 mm² to 400 mm²) as well as technical data please contact us.

Wiring Example with Extension Cables

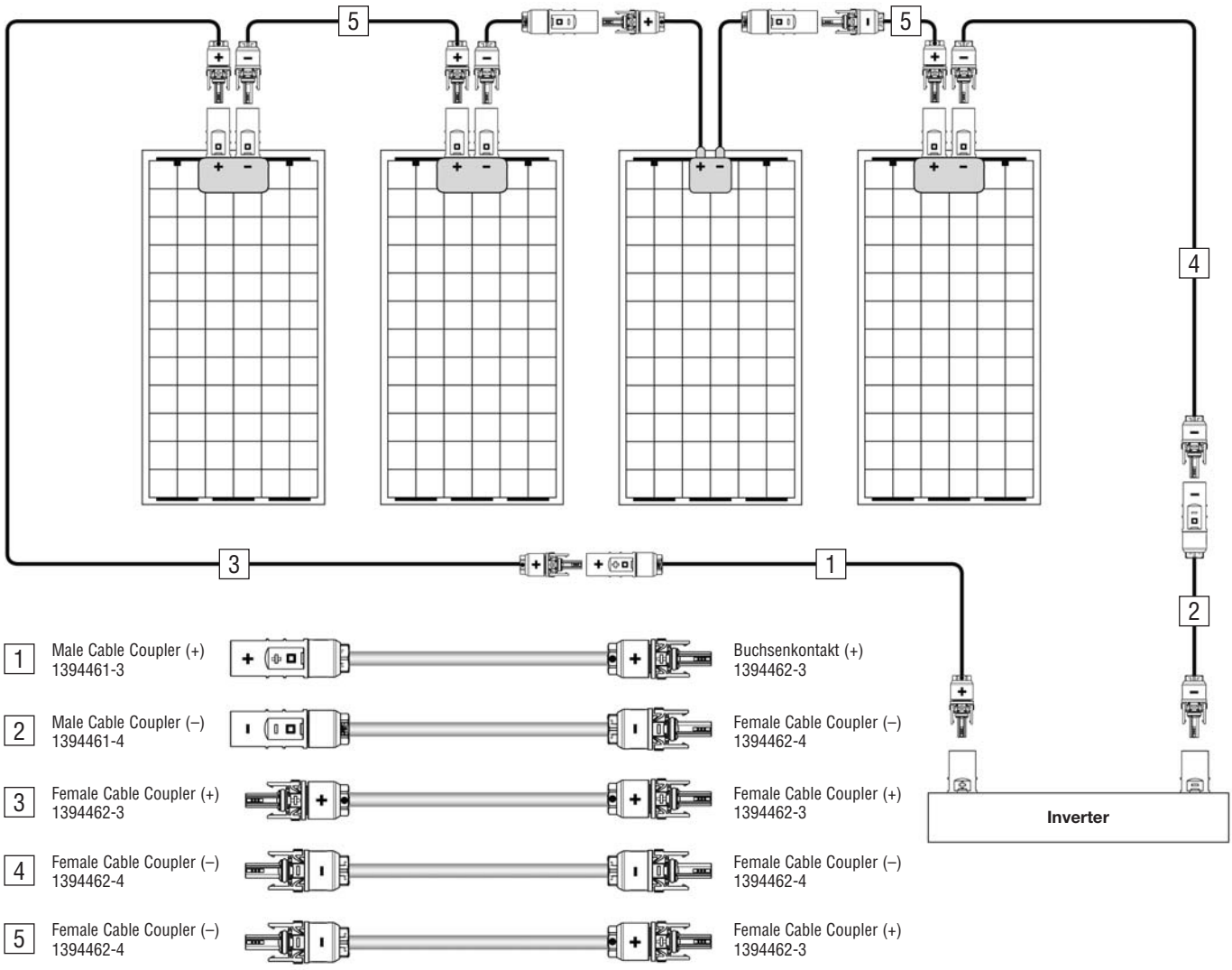

Configuration Example at 4.0 mm^2.

Cable Assembly

Wire Size:
4.0 mm^2

Color:
Black

Cable Assembly Version	Part Numbers for Cable Length				
	1 m	3 m	5 m	10 m	20 m
1	1987376-1	1987376-2	1987376-3	1987376-4	1987376-5
2	1-1987376-1	1-1987376-2	1-1987376-3	1-1987376-4	1-1987376-5
3	2-1987376-1	2-1987376-2	2-1987376-3	2-1987376-4	2-1987376-5
4	3-1987376-1	3-1987376-2	3-1987376-3	3-1987376-4	3-1987376-5
5	4-1987376-1	4-1987376-2	4-1987376-3	4-1987376-4	4-1987376-5

All used components are TÜV and UL approved.

More variants (cable length, wire diameter, color) upon request.

All dimensions are in millimeters unless otherwise specified. All specifications subject to change.
Consult Tyco Electronics for latest specifications.

Product Features

- Self-tapping screw or nut and locking ring
- Quick and easy mounting
- Four-point contact to wire
- Low interface resistance
- Toolless termination
- Re-terminateable up to 5 times
- UV resistant
- Weather-proof
- RoHS compliant
- UL approved
- TÜV in preparation

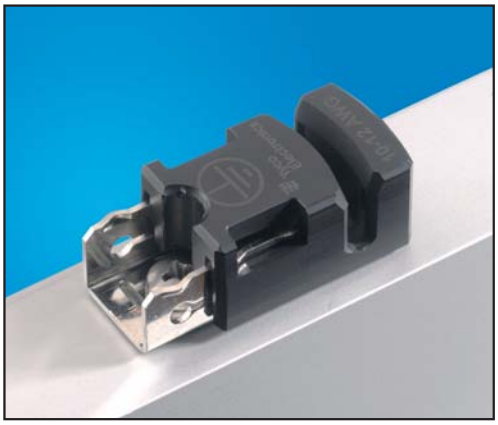

SolKlip Grounding Clip

AWG 6-8 Grounding Connection

Description

SolKlip ground clips are designed for solar panel grounding applications using solid un-insulated copper 10 AWG and 12 AWG.

Applications

Solar panels and related products that require grounding for safety reasons.

Applications include: wire jumpers between solar panels, solar roof tiles and between panels and the AC/DC inverters.

Electrical

The electrical performance of this product will meet the tough requirements of photovoltaic grounding applications.

Product Offering & Dimensions

SolKlip for Solar Grounding (Part No. **1954381-x**) to handle solid, un-insulated ground wire from 4 mm^2 (AWG 12) to 6 mm^2 (AWG 10). For larger wires from 10 mm^2 (AWG 8) and 16 mm^2 (AWG 6) please use the AWG 6-8 Grounding Connector.

Application Tooling

No special tooling required.

Approvals

- UL 467 pending
- UL 486A-B pending
- TÜV in preparation

Materials

Housing:
Durable PPT.

Contact:
High conductivity copper alloy

Mechanical

The mechanical properties of this product will meet the tough requirements for grounding applications layed down in the UL requirements.

3 Easy Steps to Ground Your PV System

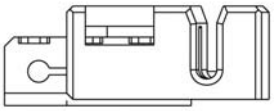

Insert …

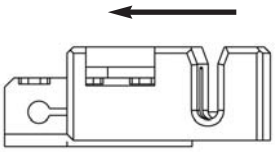

… Push …

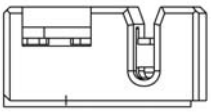

… Ready!

Grounding Solutions

Part Number	Description	Package Quantity
1954381-1	SolKlip with Self-Tapping Screw	100
1954381-2	SolKlip with Screw and Nut	100
1954381-3	SolKlip with Screw, Nut and Locking Ring	100
2058729-1	AWG 6-8 Grounding Clip	100

Interconnection Examples

Serial Interconnection for Junction Boxes with Cable Glands (4.0 mm^2 Wiring)

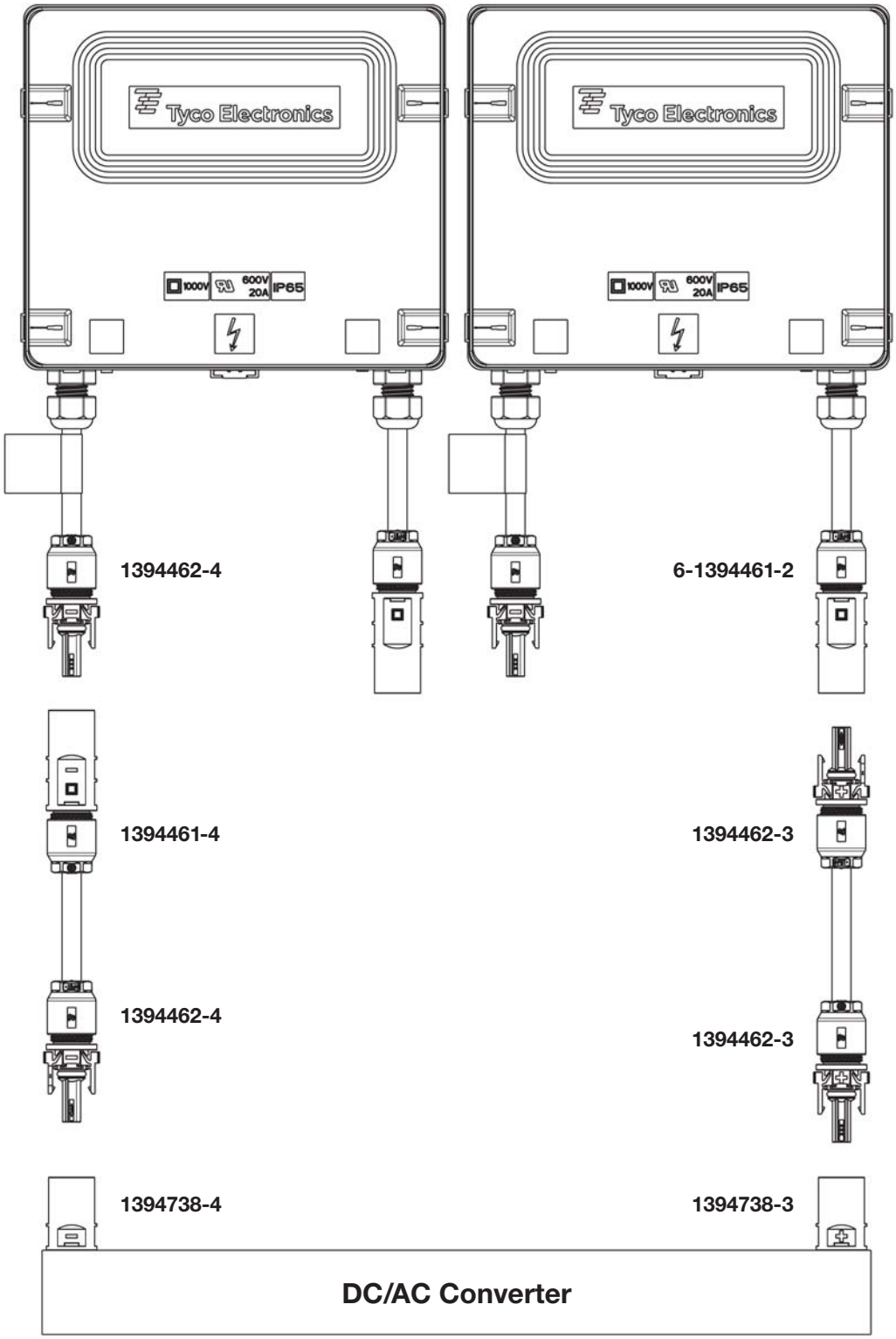

All dimensions are in millimeters unless otherwise specified. All specifications subject to change.
Consult Tyco Electronics for latest specifications.

Interconnection Examples (continued)

Serial Interconnection for Junction Boxes with Plug Connectors (4.0 mm² Wiring)

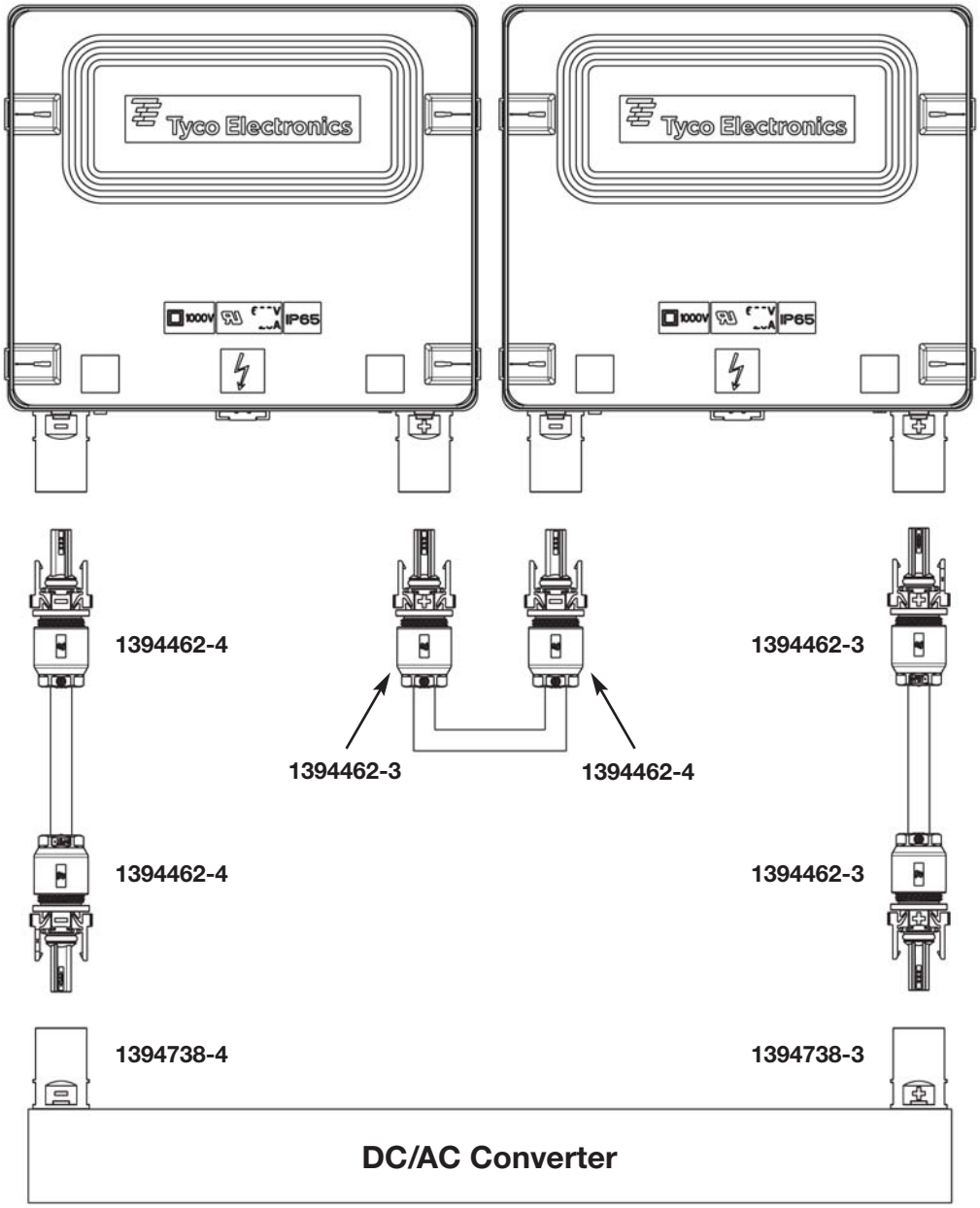

Application Tooling

Cable Assembly Tooling

Hand Crimping Tool for Screwed Contacts
incl. Vario Crimp Head and Locator

Part Numbers
1-1579004-1 (1.5 + 2.5 mm²)
1-1579004-2 (4.0 + 6.0 mm²)

Vario Crimp Head
7-1579001-8 (1.5 + 2.5 mm²)
7-1579001-9 (4.0 + 6.0 mm²)

Hand Crimping Tool for Stamped & Formed Contacts
incl. Vario Crimp Head and Locator

Part No. **2063900-1**
for 2.5–6.0 mm² (AWG 10–14)

Applicator for Strip Form Contacts
Part No. **1855503-1**

Extraction Tool
suitable for all wire sizes

Part No. **1102855-3**

Insulation Stripper
includes length stop for all wire sizes: 1.5 mm², 2.5 mm², 4.0 mm² and 6.0 mm².

Suitable for Tyco Electronics Solar Cable.

Part No. **4-1579002-2**

SOLARLOK Electric Terminator CS 200

Base Machine:
Part No. **539630-1**

Electric Terminator CS 200 for Screwed Contacts

Adapter for Vario Crimp Head:
Part No. **1579000-4**

Vario Crimp Head (1.5 and 2.5 mm²):
Part No. **7-1579001-8**

Vario Crimp Head (4.0 and 6.0 mm²):
Part No. **7-1579001-9**

Vario Crimp Head (AWG 10):
Part No. **8-1579001-2**

Vario Crimp Head (AWG 12):
Part No. **5-1579001-5**

All dimensions are in millimeters unless otherwise specified. All specifications subject to change.
Consult Tyco Electronics for latest specifications.

Application Tooling (continued)

Junction Box Assembly Tooling

Wire Spring Clamp Tool

Part No. **1579007-2**

Dioden/Jumper Spring Clamp Tool

Part No. **1579007-5**

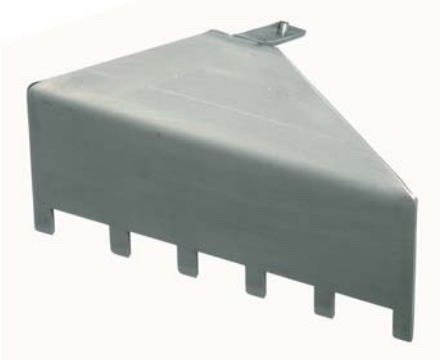

Foil Spring Clamp Tool

Part No. **1740969-3** 5-Rail Box

Part No. **1740969-1** Medium Box

Part No. **1740969-2** Small Box

Field Service Kit

Part No. **1534858-1**
(Metric Wire)

Kit includes the following parts:

- 100 Cable Coupler (Housings, Plus and Minus coded)
- Crimp Contacts (4.0 and 6.0 mm^2)
- Strain Relief
- Seals
- **Hand Crimp Tool:** Part No. **1-1579004-2**
- **Extraction Tool:** Part No. **1102855-3**
- **Insulation Stripper:** Part No. **4-1579002-2**

Contacts

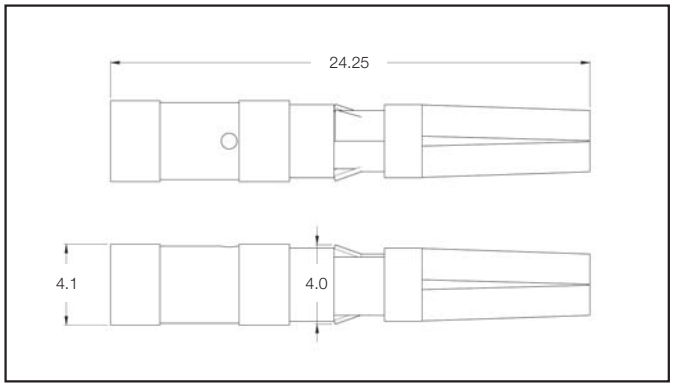

Female Contacts (Screw-Machined)

Material: Copper alloy, silver plated

Wire Size (mm²)	Wire Size (AWG)	Part Number	Package Quantity
2.5	–	1987281-1	100
4.0	–	1987281-2	100
6.0	AWG 10	1987281-3	100
–	AWG 14	1987281-4	100
–	AWG 12	1987281-5	100

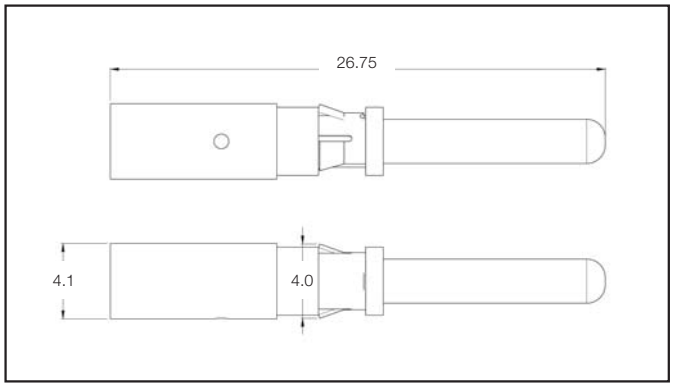

Male Contacts (Screw-Machined)

Material: Copper alloy, silver plated

Wire Size (mm²)	Wire Size (AWG)	Part Number	Package Quantity
2.5	–	1987280-1	100
4.0	–	1987280-2	100
6.0	AWG 10	1987280-3	100
–	AWG 14	1987280-4	100
–	AWG 12	1987280-5	100

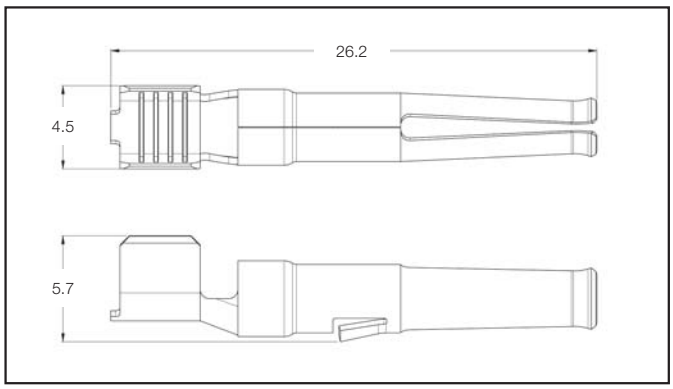

Female Contacts (Stamped and Formed)

Material: Copper alloy, silver plated

Wire Size (mm²)	Wire Size (AWG)	Part Number	Package Quantity
2.5–4.0	12–14	2058454-3	100 (Loose-Piece)
		2058454-2	6,000 (Strip Form)*

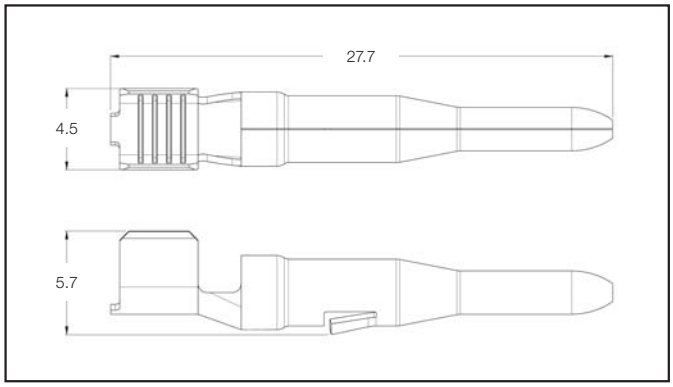

Male Contacts (Stamped and Formed)

Material: Copper alloy, silver plated

Wire Size (mm²)	Wire Size (AWG)	Part Number	Package Quantity
2.5–4.0	12–14	2058453-3	100 (Loose-Piece)
		2058453-2	6,000 (Strip Form)*

*) **Note:** Strip Form is only suitable for processing with Applicator, Part No. **1855503-1.**

All dimensions are in millimeters unless otherwise specified. All specifications subject to change.
Consult Tyco Electronics for latest specifications.

Table of Contents **Page**

SOLARLOK Plug Connectors 29
1. General Comments 29
2. Termination of the Cable Wires / Crimping of the Contacts 29
3. Handling of the Connectors 29
3.1 Selection of Sealing Grommet for Cable Connectors 29
3.2 Connector Latching 31
3.3 Disconnecting 31
4. **Application Examples** 32
5. **Storage** 32
6. **Tooling** 32

SOLARLOK Plug Connector

Attention: This connector is to be used only to interconnect firmly fixed cables.

Do not disconnect under load.
Current path should only be disconnected using approved disconnect devices.

Cable assemblies shall be labeled with Part No. **1394470-1.**

To protect against shock, ensure that conductors and their associated connectors are separated from opposite polarity components.

IMPORTANT NOTE

Mounting and installation must be done by qualified and trained staff considering all applying safety regulations. Tyco Electronics disclaims any warranty as a result of non-compliance to these notes.

1. General Comments

Any kind of pollution (dust, oil, humidity, etc.) during the assembly process or to the unmated connector can degrade contact and connector performance. This applies in particular to the seals and the crimping of the contacts.

A clean assembly environment is therefore essential.

2. Termination of the Cable Wires and Crimping of the Contacts

SOLARLOK connectors use different crimp contacts for various wire gauges.
Possible wire gauges are 2.5 mm^2, 4.0 mm^2, 5.3 mm^2 und 6.0 mm^2 resp.
AWG 14, AWG 12 and AWG 10.

The tools to be used are selected based upon the wire gauge.
For the application specification, please refer to specification # 114-74013.

3. Handling of the Connectors

3.1 Selection of Sealing Grommet for Cable Connectors

Use only appropriate wire gauges.
Besides the standard seal/pinch ring combination further five different seals are available.

- 4.0 mm grommet inner diameter (for insulation diameter from 3.2 to 4.3 mm), Part No. **1394465-5**
- 5.0 mm grommet inner diameter (for insulation diameter from 4.3 to 5.3 mm), Part No. **1394465-1**
- 6.0 mm grommet inner diameter (for insulation diameter from 5.3 to 6.2 mm), Part No. **1394465-2**
- 7.0 mm grommet inner diameter (for insulation diameter from 6.2 to 7.2 mm), Part No. **1394465-3**
- 8.0 mm grommet inner diameter (for insulation diameter from 7.2 to 8.0 mm), Part No. **1394465-4**

The grommet has to be matched with the outer diameter of the solar cable (see customer drawing, Part No. **1394461** and Part No. **1394462)** and the pinch ring (Part No. **1418677-2)** must be applied.

Assembly and Installation Guidelines (continued)

When assembling the connectors, the following sequence must be followed:

① Stripping the Wire (please refer to application specification # 114-74013).

Fig. 1

② Insert the stripped wire into the wire crimp barrel until it stops.
While holding the wire in place, squeeze tool handles together until ratchet releases.

Fig. 2

③ Push contact with cable into the connector housing (incl. seal/pinch ring combination and backshell) until you hear the contact is locked into position.

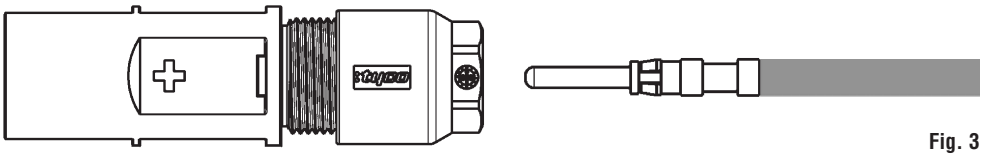

Fig. 3

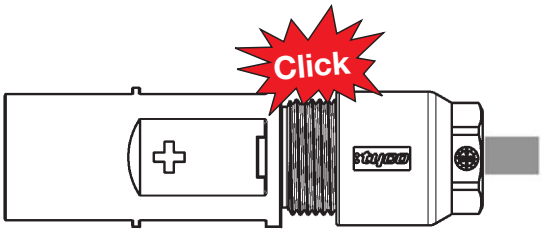

④ Tighten backshell nut to 1.5 Nm.

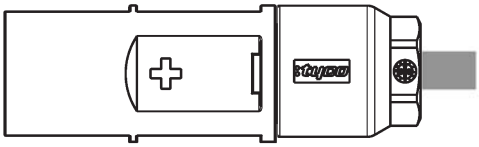

Fig. 4

All dimensions are in millimeters unless otherwise specified. All specifications subject to change.
Consult Tyco Electronics for latest specifications.

Assembly and Installation Guidelines (continued)

3.2 Connector Latching

When mating the SOLARLOK connectors, ensure the following:

- Connectors labeled with a plus or minus are keyed and can only be mated to similarly marked and keyed connectors.

> **CAUTION:**
> **The "neutral" designated pin connectors incorporate no keying features and must only be used for Serial Interconnection of Photovoltaic Modules.**
> **The neutral product should not be used where maintaining polarity is critical.**

The polarity of the "neutral" connector must labeled with Part No. **1394725-1** or Part No. **1394725-2** nearby the connector.

- The connector system is fully latched only when the latches are flush with the mating connector.
- After the connector is fully latched, the optional latch locking clip may be snapped into place.

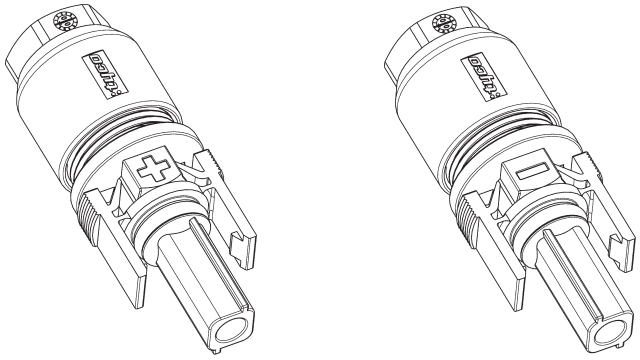

Fig. 5
(Female Connector)

3.3 Disconnecting

> **CAUTION: This connector must not be disconnected under load.**

Disconnect circuit from load before unplugging connectors.

Cable assemblies should be labeled using Tyco Electronics Label, Part No. **1394470-1.**

Unmating of the connector **CAUTION: Do not disconnect the connector under load!**

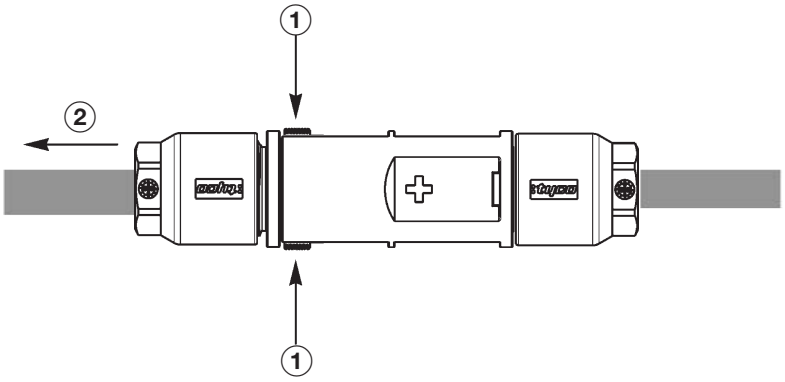

Fig. 6

① The locking mechanism is opened by depressing the latches.

② Pull out the connectors. While depressing the latches, disconnect the connector by pulling the connector halves apart.

4. Application Examples

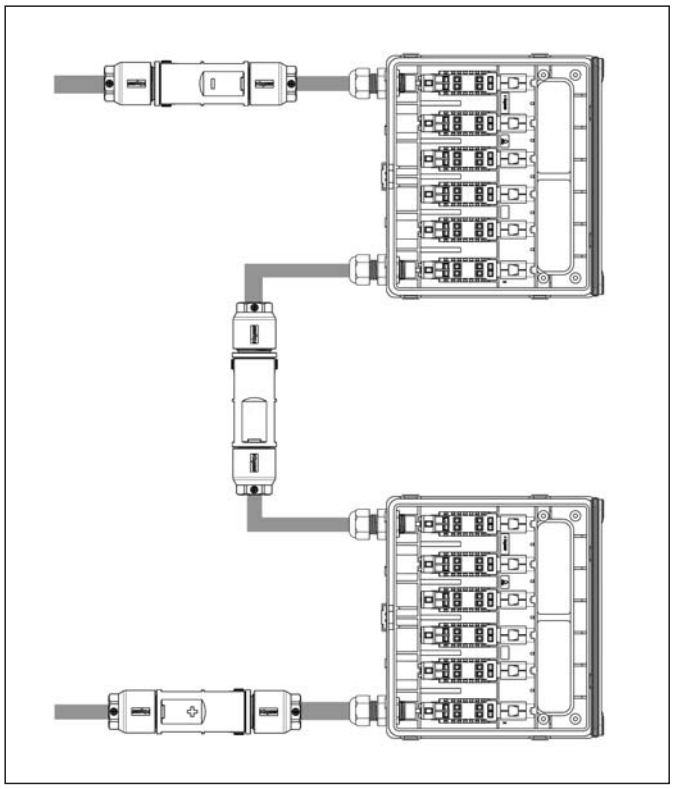

Abb. 7: Serial (Wire Diagram)

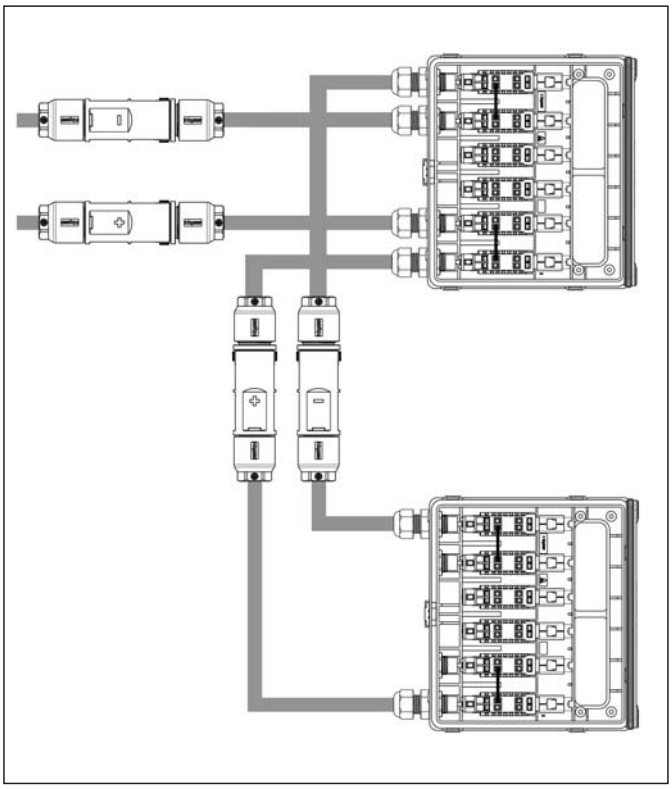

Abb. 8: Parallel (Wire Diagram)

5. Storage

See Product Specification 108-18701

6. Tooling

- Find available tools for the contact crimping on page 26 (please specify required wire gauge).
- An extraction tool (Part No. **1102855-3)** is needed to disassemble the connector components. This tool is used to unlock the contact retention features, after which the contact can be removed and re-used if necessary.

Technical Description

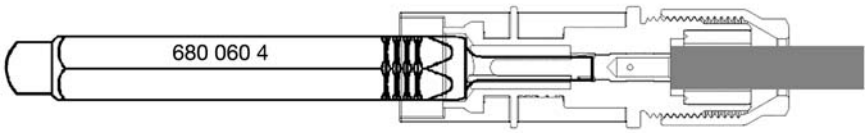

Fig. 9

All dimensions are in millimeters unless otherwise specified. All specifications subject to change.
Consult Tyco Electronics for latest specifications.

Technical Data (Junction Box and One Pole Plug Connectors)

Materials

Socket and Pin Contacts:	CuZn
Housing:	PPO, weatherproof against UV radiation and ozone

Color

Connector, Junction Box:	Black

Electrical Features

Withstanding Voltage:	1000 V DC
Current Rating:	up to 25 A
Contact Resistance:	$\leq$5 mΩ
Contact Resistance (typical):	1 mΩ
Protection Class:	II

Mechanical Features

Junction Boxes

Dimensions:	Depending on junction box type
Temperature Range:	–40 °C to +105 °C
Wire Size Range:	up to AWG 12
Protection Degree:	IP 65, closed

Connector

Dimensions:	Diameter 18 mm, (diameter 0.71 inch)
Temperature Range:	–40 °C to +105 °C
Wire Size Range:	AWG 14, AWG 12, AWG 10 stranded wire
Protection Degree:	IP 67, mated
Contact Finish:	silver plated,
Mating Cycles:	50, silver plated
Unmating Force:	30–40 Newton
Additional Features:	Coded housing ensures mating safety Contact voltage-proof Connector with crimp technology

Standards	IEC 61215 Edition 2, 61646, IEC 61730, Protection Class II, UL 1703

Subject to Change.

Numerical Index

Part Number	Page
539630-1	26
956297-4	21
956297-5	21
956297-6	21
1-956297-4	21
1-956297-5	21
1-956297-6	21
956298-4	21
956298-5	21
956298-6	21
1-956298-4	21
1-956298-5	21
1-956298-6	21
956299-4	21
956299-5	21
956299-6	21
1-956299-4	21
1-956299-5	21
1-956299-6	21
1102855-3	26, 27, 32
1394461-1	14
1394461-2	14
1394461-3	14, 22
1394461-4	14, 22, 24
6-1394461-1	14
6-1394461-2	14, 24
6-1394461-4	14
6-1394461-5	14
6-1394461-6	14
1394462-1	14
1394462-2	14
1394462-3	14, 22, 24, 25
1394462-4	14, 22, 24, 25
5-1394462-5	14
5-1394462-6	14
1394465-1	29
1394465-2	29
1394465-3	29
1394465-4	29
1394465-5	29
1394470-1	29, 31
2-1394723-4	2
3-1394723-0	2
5-1394723-3	2

Part Number	Page
6-1394723-5	2
6-1394723-6	2
1394725-1	31
1394725-2	31
1394738-1	17
1394738-2	17
1394738-3	17, 24, 25
1394738-4	17, 24, 25
1394738-9	17
1-1394738-0	17
1394739-1	16
1418677-2	29
1418867-6	6
1534226-1	16
1534611-1	16
1534611-2	16
1534858-1	27
1579000-4	26
5-1579001-5	26
7-1579001-8	26
7-1579001-9	26
8-1579001-2	26
4-1579002-2	26, 27
1-1579004-1	26
1-1579004-2	26, 27
1579007-2	27
1579007-5	27
1740077-1	2
1740077-3	2
1740210-1	17
1740210-2	17
1740210-3	17
1740210-4	17
1740210-5	17
1740210-6	17
1740210-7	17
1740210-8	17
1740210-9	17
1-1740210-0	17
1-1740210-1	17
1-1740210-2	17
1740277-1	16
1740277-2	16
1740300-2	2
1740425-5	6
1740479-1	18

Part Number	Page
1740483-1	18
1740483-2	18
1740493-1	18
1740493-2	18
1740657-8	5
1740658-1	5
1740699-6	4
3-1740699-8	5
3-1740699-9	5
1740700-1	4
1740939-2	14
1740939-4	14
1740939-5	14
1740940-3	14
1740940-4	14
1740969-1	27
1740969-2	27
1740969-3	27
1740971-2	4
1740972-1	4
1855503-1	26, 28
1954283-1	13
1954381-1	23
1954381-2	23
1954381-3	23
1954875-3	9
1971131-1	11
1971131-2	11
1971133-1	11
1971158-2	8
1971569-1	11
1981987-1	2
1981988-1	2
1986164-1	21
1986164-2	21
1986164-3	21
1986165-1	21
1986165-2	21
1986165-3	21
1986166-1	21
1986166-2	21
1986166-3	21
1987002-4	4
1987003-3	4
1987225-6	6
1987252-1	6
1987254-2	2
1987280-1	28

All dimensions are in millimeters unless otherwise specified. All specifications subject to change.
Consult Tyco Electronics for latest specifications.

Numerical Index

Part Number	Page
1987280-2	28
1987280-3	28
1987280-4	28
1987280-5	28
1987281-1	28
1987281-2	28
1987281-3	28
1987281-4	28
1987281-5	28
1987286-4	15
1987286-5	15
1987286-6	15
1987287-1	15
1987287-2	15
1987293-3	10
1987294-2	2
1987376-1	22
1987376-2	22
1987376-3	22
1987376-4	22
1987376-5	22
1-1987376-1	22
1-1987376-2	22

Part Number	Page
1-1987376-3	22
1-1987376-4	22
1-1987376-5	22
2-1987376-1	22
2-1987376-2	22
2-1987376-3	22
2-1987376-4	22
2-1987376-5	22
3-1987376-1	22
3-1987376-2	22
3-1987376-3	22
3-1987376-4	22
3-1987376-5	22
4-1987376-1	22
4-1987376-2	22
4-1987376-3	22
4-1987376-4	22
4-1987376-5	22
1987392-1	7
1987392-2	7
1987392-3	7
1987423-1	16
1987459-1	6

Part Number	Page
1987558-1	15
1987558-2	15
1987558-3	15
1-1987558-1	15
1-1987558-2	15
1-1987558-3	15
1987559-1	15
1987559-2	15
1-1987559-1	15
1-1987559-2	15
1987777-1	6
1987858-3	3
1987982-3	3
1987994-1	5
1987995-1	5
2058453-2	28
2058453-3	28
2058454-2	28
2058454-3	28
2058729-1	23
2063900-1	26
2106207-1	16

Disclaimer

While Tyco Electronics and its affiliates referenced herein have made every reasonable effort to ensure the accuracy of the information contained in this catalog, Tyco Electronics cannot assure that this information is error free. For this reason, Tyco Electronics does not make any representation or offer any guarantee that such information is accurate, correct, reliable or current. Tyco Electronics reserves the right to make any adjustments to the information at any time. Tyco Electronics expressly disclaims any implied warranty regarding the information contained herein, including, but not limited to, the implied warranties of merchantability or fitness for a particular purpose. Tyco Electronics' only obligations are those stated in Tyco Electronics' Standard Terms and Conditions of Sale. Tyco Electronics will in no case be liable for any incidental, indirect or consequential damages arising from or in connection with, including, but not limited to, the sale, resale, use or misuse of its products. Users should rely on their own judgment to evaluate the suitability of a product for a certain purpose and test each product for its intended application.

In case of any potential ambiguities or questions, please don't hesitate to contact us for clarification.

www.tycoelectronics.com
SOLARLOK, SOLKLIP, TE Logo and Tyco Electronics are trademarks.

Restriction on the Use of Hazardous Substances (RoHS)

At Tyco Electronics, we're ready to support your RoHS requirements. We've assessed more than 1.5 million end items/components for RoHS compliance, and issued new part numbers where any change was required to eliminate the restricted materials. Part numbers in this catalog are identified as:

RoHS Compliant

Part numbers in this catalog are RoHS Compliant, unless marked otherwise.

These products comply with European Union Directive 2002/95/EC as amended 1 January 2006 that restricts the use of lead, mercury, cadmium, hexavalent chromium, PBB, and PBDE in certain electrical and electronic products sold into the EU as of 1 July 2006.

Note: For purposes of this Catalog, included within the definition of RoHS Compliant are products that are clearly "Out of Scope" of the RoHS Directive such as hand tools and other non-electrical accessories.

Non-RoHS Compliant

These part numbers are identified with a "♦" symbol. These products do not comply with the material restrictions of the European Union Directive 2002/95/EC.

5 of 6 Compliant

A "●" symbol identifies these part numbers. These products do not fully comply with the European Union Directive 2002/95/EC because they contain lead in solderable interfaces (they do not contain any of the other five restricted substances above allowable limits). However, these products may be suitable for use in RoHS applications where there is an application-based exception for lead in solders, such as the server, storage, or networking infrastructure exemption.

Note: Information regarding RoHS compliance is provided based on reasonable inquiry of our suppliers and represents our current actual knowledge based on the information provided by our suppliers. This information is subject to change. For latest compliance status, refer to our website referenced below.

Getting the Information You Need

Our comprehensive on-line RoHS Customer Support Center provides a forum to answer your questions and support your RoHS needs. A RoHS FAQ (Frequently Asked Questions) is available with links to more detailed information. You can also submit RoHS questions and receive a response within 24 hours during a normal work week. The Support Center also provides:

- Cross-Reference from Non-compliant to Compliant Products
- Ability to browse RoHS Compliant Products in our on-line catalog: http://ecommas.tycoelectronics.com/commerce/alt/RohsAltHome.do
- Downloadable Technical Data Customer Information Presentation
- More detailed information regarding the definitions used above

RoHS Customer Support Center

So whatever your questions when it comes to RoHS, we've got the answers at www.tycoelectronics.com/leadfree

All dimensions are in millimeters unless otherwise specified. All specifications subject to change.
Consult Tyco Electronics for latest specifications.

Tyco Electronics

Global Contacts

Americas

Argentina – Buenos Aires
Phone: +54-11-4733-2200
Fax: +54-11-4733-2211

Brasil – São Paulo
Phone: +55-11-2103-6000
Fax: +55-11-2103-6030

Chile – Santiago
Phone: +56-2-345-0361
Fax: +56-2-223-1477

Canada – Toronto
Phone: +1-905-475-6222
Fax: +1-905-474-5520
Product Information Center:
Phone: +1-905-470-4425
Fax: +1-905-474-5525

Colombia – Bogota
Phone: +57-1-319-8959
Fax: +57-1-319-8960

Mexico – Mexico City
Phone: +52-55-1106-0800
+01-800-733-8926
Fax: +52-55-1106-0901

For Latin/South American Countries not shown
Phone: +54-11-4733-2015
Fax: +54-11-4733-2083

United States
Harrisburg, PA
Phone: +1-717-564-0100
Fax: +1-717-986-7575
Product Information Center:
Phone: +1-800-522-6752
Fax: +1-717-986-7575

Asia/Pacific

Australia – Sydney
Phone: +61-2-9554-2600
Fax: +61-2-9502-2556
Product Information Center:
Phone: +61-2-9840-8200
Fax: +61-2-9634-6188

India – Bangalore
Phone: +91-80-2854-0800
Fax: +91-80-2854-0820

Indonesia – Jakarta
Phone: +65-6482-0311
Fax: +65-6482-1012

Japan – Kawasaki, Kanagawa
Phone: +81-44-844-8111
Fax: +81-44-812-3207
Product Information Center:
Phone: +81-44-844-8013
Fax: +81-44-812-3200

Korea – Seoul
Phone: +82-2-3415-4500
Fax: +82-2-3486-3810

Malaysia – Selangor
Phone: +60-3-7805-3055
Fax: +60-3-7805-3066

New Zealand – Auckland
Phone: +64-9-634-4580
Fax: +64-9-634-4586

Philippines – Makati City
Phone: +632-848-0171
Fax: +632-867-8661

People's Republic of China
Hong Kong
Phone: +852-2735-1628
Fax: +852-2735-0243

Shanghai
Phone: +86-21-2407-1588
Fax: +86-21-2407-1599

Singapore – Singapore
Phone: +65-6482-0311
Fax: +65-6482-1012

Taiwan – Taipei
Phone: +886-2-8768-2788
Fax: +886-2-8768-2268

Thailand – Bangkok
Phone: +66-2-955-0500
Fax: +66-2-955-0505

Vietnam – Ho Chi Minh City
Phone: +84-8-930-5546
Fax: +84-8-930-3443

Europe/Middle East/Africa

Austria – Vienna
Phone: +43-1-905-60-0
Fax: +43-1-905-60-1333
Product Information Center:
Phone: +43-1-905-60-1228
Fax: +43-1-905-60-1258

Belarus – Minsk
Phone: +375-17-237-47-94
Fax: +375-17-237-47-94

Belgium – Kessel-Lo
Phone: +32-16-352-300
Fax: +32-16-352-355

Bulgaria – Sofia
Phone: +359-2-971-2152
Fax: +359-2-971-2153

Czech Republic and Slovakia
Czech Republic – Kurim
Phone: +420-541-162-111
Fax: +420-541-162-223
Product Information Center:
Phone: +420-541-162-113
Fax: +420-541-162-132

Denmark – Glostrup
Phone: +45-43-48-04-00
Fax: +45-43-44-14-14

Egypt – Cairo
Phone: +202-419-2334
Fax: +202-417-7647

Estonia – Tartu
Phone: +372-5138-274
Fax: +372-7400-779

Finland – Helsinki
Phone: +358-95-12-34-20
Fax: +358-95-12-34-250

France – Cergy-Pontoise Cedex
Phone: +33-1-3420-8888
Fax: +33-1-3420-8600
Product Information Center:
Phone: +33-1-3420-8686
Fax: +33-1-3420-8623

France Export Divisions – Cergy-Pontoise Cedex
Phone: +33-1-3420-8804
Fax: +33-1-3420-8699

Germany – Bensheim
Phone: +49-6251-133-0
Fax: +49-6251-133-1600
Product Information Center:
Phone: +49-6251-133-1999
Fax: +49-6251-133-1988

Greece – Athens
Phone: +30-210-9370-396/397
Fax: +30-210-9370-655

Hungary – Budapest
Phone: +36-1-289-1000
Fax: +36-1-289-1010
Product Information Center:
Phone: +36-1-289-1016
Fax: +36-1-289-1017

Ireland – Dublin
Phone: +353-1-866-5612
Fax: +353-1-866-5714

Israel – Petach-Tikva
Phone: +972-3-929-0999
Fax: +972-3-919-1088

Italy – Collegno (Torino)
Phone: +39-011-4012-111
Fax: +39-011-4031-116
Product Information Center:
Phone: +39-011-4012-428
Fax: +39-011-40-287-428

Lithuania and Latvia
Lithuania – Vilnius
Phone: +370-5-213-1402
Fax: +370-5-213-1403

Netherlands – 's-Hertogenbosch
Phone: +31-73-6246-246
Fax: +31-73-6212-365
Product Information Center:
Phone: +31-73-6246-999
Fax: +31-73-6246-998

Norway – Nesbru
Phone: +47-66-77-88-50
Fax: +47-66-77-88-55

Poland – Warsaw
Phone: +48-22-4576-700
Fax: +48-22-4576-720
Product Information Center:
Phone: +48-22-4576-704
Fax: +48-22-4576-720

Romania – Bucharest
Phone: +40-21-311-3479/3596
Fax: +40-21-312-0574

Russia – Moscow
Phone: +7-495-790-7902
Fax: +7-495-721-1893
Product Information Center:
Phone: +7-495-790-7902-404
Fax: +7-495-790-7902-401

Slovenia – Ljubljana
Phone: +386-1561-3270
Fax: +386-1561-3240

South Africa – Port Elizabeth
Phone: +27-41-503-4500
Fax: +27-41-581-0440

Spain – Barcelona
Phone: +34-93-291-0330
Fax: +34-93-201-7879

Sweden – Upplands Väsby
Phone: +46-8-50-72-50-00
Fax: +46-8-50-72-50-01

Switzerland – Steinach
Phone: +41-71-447-0447
Fax: +41-71-447-0444

Turkey – Istanbul
Phone: +90-212-281-8181/2/3
+90-212-282-5130/5430
Fax: +90-212-281-8184

Ukraine – Kiev
Phone: +380-44-206-2265
Fax: +380-44-206-2264
Product Information Center:
Phone: +380-44-206-2265
Fax: +380-44-206-2264

United Kingdom – Swindon
Phone: +44-8706-080208
Fax: +44-208-954-6234

Parts of the cover photo were kindly provided by: SCHÜCO INTERNATIONAL

Tyco Electronics AMP GmbH
AMPèrestr. 12–14
64625 Bensheim / Germany
Phone: +49-(0)6251-133-0
Fax: +49-(0)6251-133-1600

www.tycoelectronics.com
SOLARLOK, SOLKLIP, TE Logo
and Tyco Electronics are trademarks.

© 2009 Tyco Electronics Ltd.
889753-3 Revised 9-2009 12M ST

Компания «ЭлектроПласт» предлагает заключение долгосрочных отношений при поставках импортных электронных компонентов на взаимовыгодных условиях!

Наши преимущества:

- Оперативные поставки широкого спектра электронных компонентов отечественного и импортного производства напрямую от производителей и с крупнейших мировых складов;
- Поставка более 17-ти миллионов наименований электронных компонентов;
- Поставка сложных, дефицитных, либо снятых с производства позиций;
- Оперативные сроки поставки под заказ (от 5 рабочих дней);
- Экспресс доставка в любую точку России;
- Техническая поддержка проекта, помощь в подборе аналогов, поставка прототипов;
- Система менеджмента качества сертифицирована по Международному стандарту ISO 9001;
- Лицензия ФСБ на осуществление работ с использованием сведений, составляющих государственную тайну;
- Поставка специализированных компонентов (Xilinx, Altera, Analog Devices, Intersil, Interpoint, Microsemi, Aeroflex, Peregrine, Syfer, Eurofarad, Texas Instrument, Miteq, Cobham, E2V, MA-COM, Hittite, Mini-Circuits,General Dynamics и др.);

Помимо этого, одним из направлений компании «ЭлектроПласт» является направление «Источники питания». Мы предлагаем Вам помощь Конструкторского отдела:

- Подбор оптимального решения, техническое обоснование при выборе компонента;
- Подбор аналогов;
- Консультации по применению компонента;
- Поставка образцов и прототипов;
- Техническая поддержка проекта;
- Защита от снятия компонента с производства.

Как с нами связаться

Телефон: 8 (812) 309 58 32 (многоканальный)
Факс: 8 (812) 320-02-42
Электронная почта: org@eplast1.ru
Адрес: 198099, г. Санкт-Петербург, ул. Калинина, дом 2, корпус 4, литера А.