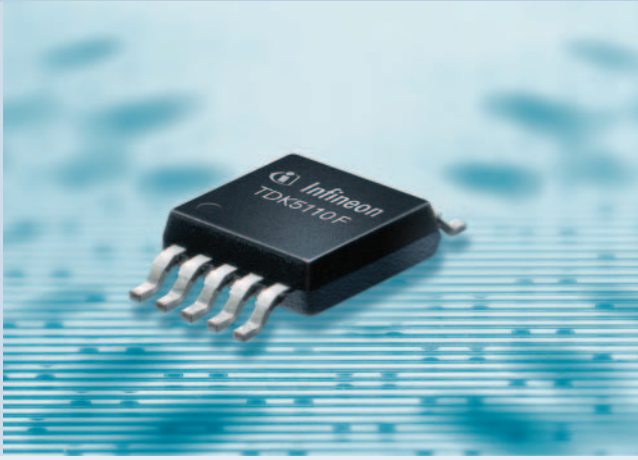

TDK511xF Series

High Power 315/434/868 MHz, ASK/FSK Transmitters (-40 ... +125°C)

WIRELESS CONTROL – The TDK511xF series is a family of high power ASK/FSK transmitters for the frequency bands 311 – 317 MHz, 433 – 435 MHz and 868 – 870 MHz. The IC offers a high level of integration and needs only a few external components. The device contains a fully integrated PLL synthesizer and a high efficiency power amplifier to drive a loop antenna. A special circuit design and a unique power amplifier design are used to save current consumption and therefore to save battery life. Additional features like power down mode and divided clock output are implemented. The IC can be used for both ASK and FSK modulation.

Applications

- Remote Keyless Entry (RKE) systems
- Tire Pressure Monitoring (TPM) systems
- Remote control systems
- Alarm systems
- Communication systems

Ordering Information

Type	Ordering Code	Package
TDK5110F	SP000056180	PG-TSSOP-10
TDK5111F	SP000056181	PG-TSSOP-10
TDK5116F	SP000056182	PG-TSSOP-10

Evaluation Kits

Type	Modulation	Frequency	Ordering Code
TDK5110F-TDA5210	FSK	434 MHz	SP000086722
TDK5111F-TDA5211	FSK	315 MHz	SP000086723
TDK5116F-TDA5210	FSK	868 KHz	SP000087099

Features

- Frequency range
  311 – 317 MHz/433 – 435 MHz/868 – 870 MHz
- ASK and FSK modulation
- High efficiency power amplifier typically
  10 dBm @ 3 V
- Fully integrated frequency synthesizer
- VCO without external components
- Fully integrated frequency synthesizer
- Power down mode
- Divided clock output for µC
- Low external component count
- Integrated FSK-switch
- Low supply current typ. 14 mA @ 3 V
- Voltage supply range 2.1 – 4 V
- Temperature range -40 ... +125°C

Block Diagram TDK5110F

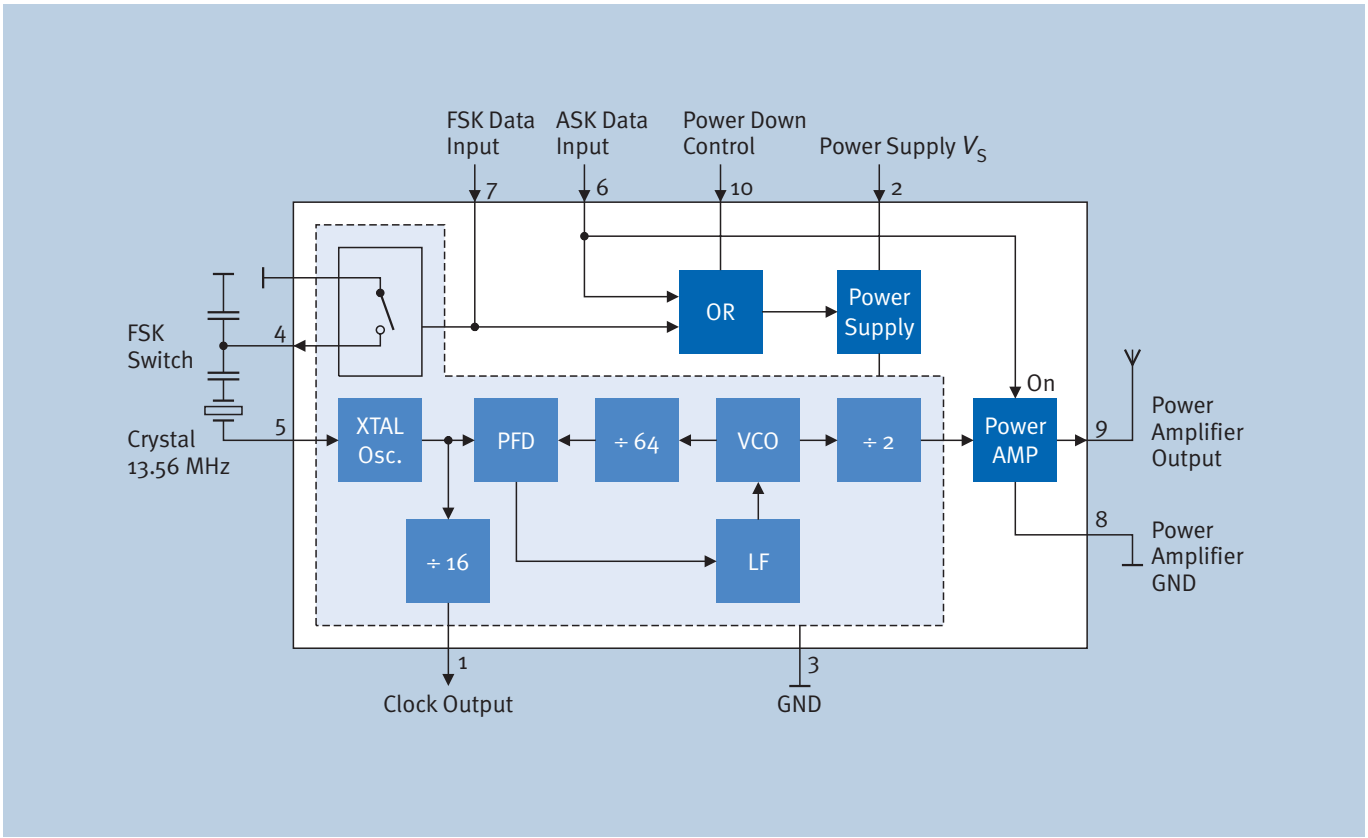

Type	TDK5110F	TDK5111F	TDK5116F
Frequency Range	433 – 435 MHz	311 – 317 MHz	868 – 870 MHz
Data Rate	20 kHz (ASK/FSK)	20 kHz (ASK/FSK)	20 kHz (ASK/FSK)
Supply Voltage	2.1 – 4 V	2.1 – 4 V	2.1 – 4 V
Supply Current typ. (PLL Enable Mode/Transmit Mode V_s = 3 V)	4/14.2 mA	4/14 mA	4/14 mA
Power Down Current	4 µA	4 µA	4 µA
RF Transmit Power typ.	10.0 dBm	10.0 dBm	10.0 dBm
Package	PG-TSSOP-10	PG-TSSOP-10	PG-TSSOP-10
Temperature Range	-40°C ... +125°C	-40°C ... +125°C	-40°C ... +125°C

How to reach us:
http://www.infineon.com

Published by
Infineon Technologies AG
81726 München, Germany

© Infineon Technologies AG 2006.
All Rights Reserved.

Legal Disclaimer

The information given in this Product Brief shall in no event be regarded as a guarantee of conditions or characteristics ("Beschaffenheitsgarantie"). With respect to any examples or hints given herein, any typical values stated herein and/or any information regarding the application of the device, Infineon Technologies hereby disclaims any and all warranties and liabilities of any kind, including without limitation warranties of non-infringement of intellectual property rights of any third party.

Information

For further information on technology, delivery terms and conditions and prices please contact your nearest Infineon Technologies Office (www.infineon.com).

Warnings

Due to technical requirements components may contain dangerous substances. For information on the types in question please contact your nearest Infineon Technologies Office.

Infineon Technologies Components may only be used in life-support devices or systems with the express written approval of Infineon Technologies, if a failure of such components can reasonably be expected to cause the failure of that life-support device or system, or to affect the safety or effectiveness of that device or system. Life support devices or systems are intended to be implanted in the human body, or to support and/or maintain and sustain and/or protect human life. If they fail, it is reasonable to assume that the health of the user or other persons may be endangered.

Ordering No. B138-H8689-G1-X-7600
Printed in Germany
PS 0506.5 nb

Published by Infineon Technologies AG

Компания «ЭлектроПласт» предлагает заключение долгосрочных отношений при поставках импортных электронных компонентов на взаимовыгодных условиях!

Наши преимущества:

- Оперативные поставки широкого спектра электронных компонентов отечественного и импортного производства напрямую от производителей и с крупнейших мировых складов;
- Поставка более 17-ти миллионов наименований электронных компонентов;
- Поставка сложных, дефицитных, либо снятых с производства позиций;
- Оперативные сроки поставки под заказ (от 5 рабочих дней);
- Экспресс доставка в любую точку России;
- Техническая поддержка проекта, помощь в подборе аналогов, поставка прототипов;
- Система менеджмента качества сертифицирована по Международному стандарту ISO 9001;
- Лицензия ФСБ на осуществление работ с использованием сведений, составляющих государственную тайну;
- Поставка специализированных компонентов (Xilinx, Altera, Analog Devices, Intersil, Interpoint, Microsemi, Aeroflex, Peregrine, Syfer, Eurofarad, Texas Instrument, Miteq, Cobham, E2V, MA-COM, Hittite, Mini-Circuits,General Dynamics и др.);

Помимо этого, одним из направлений компании «ЭлектроПласт» является направление «Источники питания». Мы предлагаем Вам помощь Конструкторского отдела:

- Подбор оптимального решения, техническое обоснование при выборе компонента;
- Подбор аналогов;
- Консультации по применению компонента;
- Поставка образцов и прототипов;
- Техническая поддержка проекта;
- Защита от снятия компонента с производства.

Как с нами связаться

Телефон: 8 (812) 309 58 32 (многоканальный)
Факс: 8 (812) 320-02-42
Электронная почта: org@eplast1.ru
Адрес: 198099, г. Санкт-Петербург, ул. Калинина, дом 2, корпус 4, литера А.