319-001
EMI/RFI Shield Sock Shrink Boot Adapter
with Optional Shrink Boot
Standard Profile - Rotatable Coupling

CONNECTOR DESIGNATORS

A-F-H-L-S

ROTATABLE COUPLING

319 F J 001 M 16 06-6 T

- Product Series
- Connector Designator
- Angle and Profile
  - J = 90°
  - H = 45°
  - See page 319-2 for straight
- Basic Part No.
- Finish (Table II)
- Shell Size (Table I)
- Cable Entry (Table IV)
- Shield Length (1 inch increments: Minimum 6 inches)
- Shrink Boot (Table IV - Omit for None)

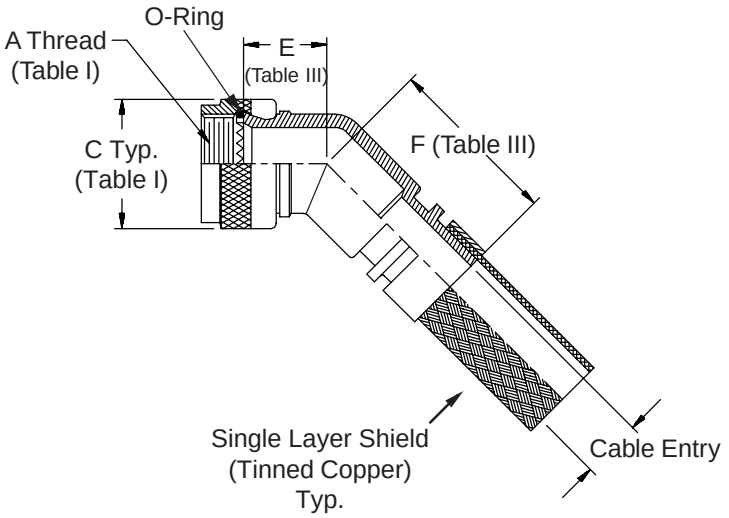

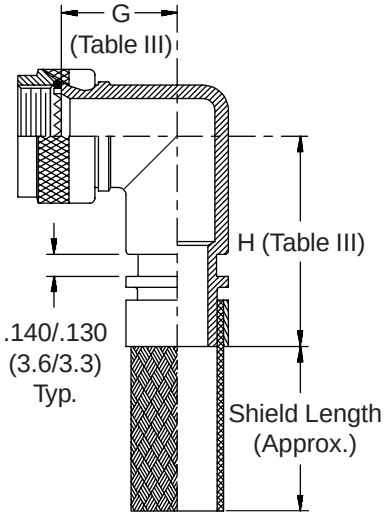

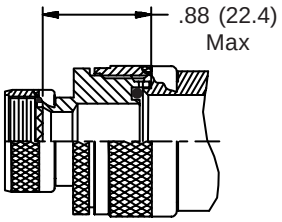

STYLE 2
(45° & 90°
See Note 5)

-445 Now Available with the "NESTOR"

Glenair's Non-Detent, Spring-Loaded, Self-Locking Coupling.

Add "-445" to Specify This AS85049 Style "N" Coupling Interface.

© 2005 Glenair, Inc. CAGE Code 06324 Printed in U.S.A.

319-001
EMI/RFI Shield Sock Shrink Boot Adapter
with Optional Shrink Boot
Standard Profile - Rotatable Coupling

See inside back cover fold-out or pages 13 and 14 for unabridged Tables I and II.

TABLE III: DIMENSIONS

Shell Size Conn. Desig. A-F-L-S	H	E Max		F Max		G Max		H Max	
08	09	.830	(21.1)	1.045	(26.5)	.940	(23.9)	1.155	(29.3)
10	11	.860	(21.8)	1.075	(27.3)	1.010	(25.7)	1.225	(31.1)
12	13	.882	(22.4)	1.097	(27.9)	1.070	(27.2)	1.285	(32.6)
14	15	.900	(22.9)	1.125	(28.6)	1.130	(28.7)	1.345	(34.2)
16	17	.930	(23.6)	1.145	(29.1)	1.190	(30.2)	1.405	(35.7)
18	19	.950	(24.1)	1.165	(29.6)	1.240	(31.5)	1.455	(37.0)
20	21	.980	(24.9)	1.195	(30.4)	1.310	(33.3)	1.525	(38.7)
22	23	1.000	(25.4)	1.215	(30.9)	1.360	(34.5)	1.575	(40.0)
24	25	1.030	(26.2)	1.245	(31.6)	1.430	(36.3)	1.645	(41.8)

1. Cable Entry is defined as the accomodation range for the wire bundle or cable. Dimensions shown are not intended for inspection criteria.
2. See Shrink Boot Reference Information (page 40).
3. Metric dimensions (mm) are indicated in parentheses.
4. O-Ring not supplied with Connector Designator A.
5. When maximum entry (page 21) is exceeded, Style 2 will be supplied. Dimensions E, F, G, & H will not apply. Please consult factory.

TABLE IV: CABLE ENTRY/SHRINK BOOT

Dash No.	Cable Entry		Shrink Boot *
01	.188	(4.8)	n/a
02	.250	(6.4)	n/a
03	.312	(7.9)	202K121-25-0
04	.375	(9.5)	202K121-25-0
05	.438	(11.1)	202K121-25-0
06	.500	(12.7)	202K132-25-0
07	.562	(14.3)	202K132-25-0
08	.625	(15.9)	202K132-25-0
09	.688	(17.5)	202K142-25-0
10	.750	(19.1)	202K142-25-0
11	.812	(20.6)	202K142-25-0
12	.875	(22.2)	202K153-25-0
13	.938	(23.8)	202K153-25-0
14	1.000	(25.4)	202K153-25-0
15	1.250	(31.8)	202K163-25-0
16	1.500	(38.1)	202K174-25-0
17	1.750	(44.5)	n/a
18	2.000	(50.8)	n/a
19	1.125	(28.6)	n/a
20	1.375	(34.9)	n/a
21	1.625	(41.3)	n/a
22	1.062	(27.0)	n/a
23	1.188	(30.2)	n/a
24	1.875	(47.6)	n/a

* Raychem Shrink Boot Supplied with "T" Option (see Part Number Development)

TABLE II: STANDARD FINISHES

GLENAIR SYMBOL	FINISH
B	Cadmium Plate, Olive Drab
M	Electroless Nickel
NF	Cadmium Plate, Olive Drab Over Electroless Nickel

See Back Cover for Complete Finish Information and Additional Finish Options

© 2005 Glenair, Inc.

319-001
EMI/RFI Shield Sock Shrink Boot Adapter
with Optional Shrink Boot
Low Profile - Rotatable Coupling

CONNECTOR DESIGNATORS

A-F-H-L-S

ROTATABLE COUPLING

319 F S 001 M 16 06-6 T

- Product Series
- Connector Designator
- Angle and Profile
  - A = 90°
  - B = 45°
  - S = Straight
- Basic Part No.
- Finish (Table II)
- Shell Size (Table I)
- Cable Entry (Table IV)
- Shield Length (1 inch increments: Minimum 6 inches)
- Shrink Boot (Table IV - Omit for None)

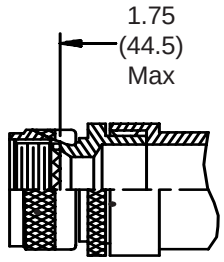

STYLE 2 (STRAIGHT See Note 5)

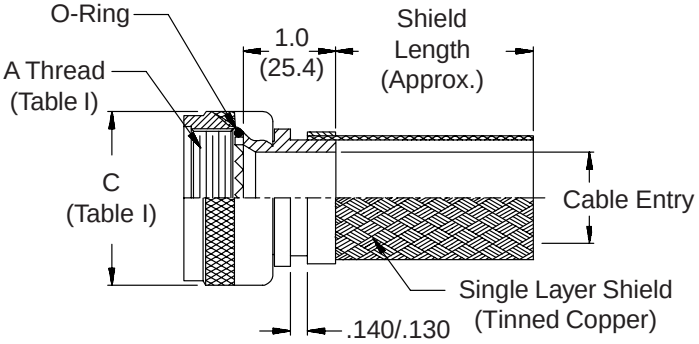

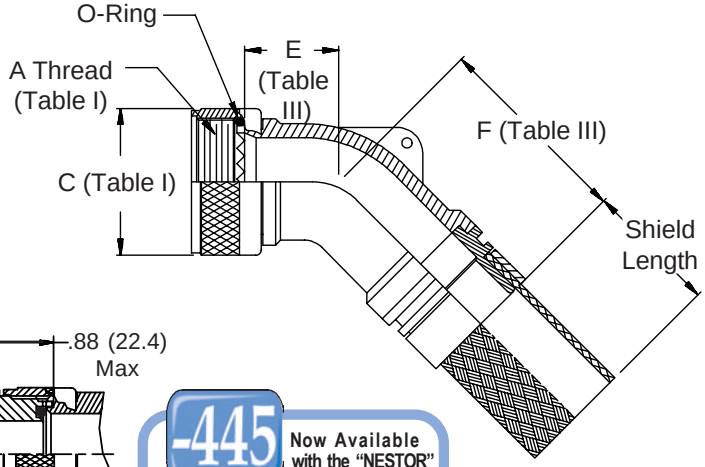

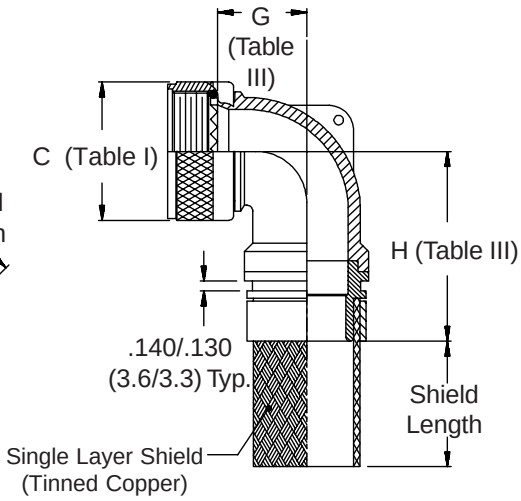

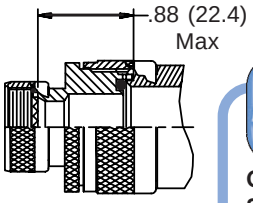

STYLE 2 (45° & 90° See Note 5)

-445 Now Available with the "NESTOR"

Glenair's Non-Detent, Spring-Loaded, Self-Locking Coupling.

Add "-445" to Specify This AS85049 Style "N" Coupling Interface.

© 2005 Glenair, Inc. CAGE Code 06324 Printed in U.S.A.

319-001
EMI/RFI Shield Sock Shrink Boot Adapter
with Optional Shrink Boot
Low Profile - Rotatable Coupling

See inside back cover fold-out or pages 13 and 14 for unabridged Tables I and II.

TABLE III: DIMENSIONS

Shell Size Conn. Desig. A-F-L-S	H	E Max		F Max		G Max		H Max	
08	09	.457	(11.6)	1.710	(43.4)	.500	(12.7)	1.730	(43.9)
10	11	.520	(13.2)	1.770	(45.0)	.595	(15.1)	1.850	(47.0)
12	13	.582	(14.8)	1.830	(46.5)	.610	(15.5)	1.870	(47.5)
14	15	.645	(16.4)	1.920	(48.8)	.700	(17.8)	1.940	(49.3)
16	17	.738	(18.7)	2.030	(51.6)	.885	(22.5)	2.030	(51.6)
18	19	.926	(23.5)	2.220	(56.4)	.975	(24.8)	2.200	(55.9)
20	21	.926	(23.5)	2.220	(56.4)	.975	(24.8)	2.200	(55.9)
22	23	1.020	(25.9)	2.370	(60.2)	1.125	(28.6)	2.310	(58.7)
24	25	1.020	(25.9)	2.370	(60.2)	1.125	(28.6)	2.310	(58.7)
28		1.145	(29.1)	2.420	(61.5)	1.225	(31.1)	2.480	(63.0)
32		1.207	(30.7)	2.520	(64.0)	1.575	(40.0)	2.730	(69.3)
36		1.238	(31.4)	2.610	(66.3)	1.775	(45.1)	2.730	(69.3)

TABLE IV: CABLE ENTRY/SHRINK BOOT

Dash No.	Cable Entry		Shrink Boot *
01	.188	(4.8)	n/a
02	.250	(6.4)	n/a
03	.312	(7.9)	202K121-25-0
04	.375	(9.5)	202K121-25-0
05	.438	(11.1)	202K121-25-0
06	.500	(12.7)	202K132-25-0
07	.562	(14.3)	202K132-25-0
08	.625	(15.9)	202K132-25-0
09	.688	(17.5)	202K142-25-0
10	.750	(19.1)	202K142-25-0
11	.812	(20.6)	202K142-25-0
12	.875	(22.2)	202K153-25-0
13	.938	(23.8)	202K153-25-0
14	1.000	(25.4)	202K153-25-0
15	1.250	(31.8)	202K163-25-0
16	1.500	(38.1)	202K174-25-0
17	1.750	(44.5)	n/a
18	2.000	(50.8)	n/a
19	1.125	(28.6)	n/a
20	1.375	(34.9)	n/a
21	1.625	(41.3)	n/a
22	1.062	(27.0)	n/a
23	1.188	(30.2)	n/a
24	1.875	(47.6)	n/a

* Raychem Shrink Boot Supplied with "T" Option (see Part Number Development)

1. Cable Entry or range is defined as the accomodation range for the wire bundle or cable. Dimensions shown are not intended for inspection criteria.
2. See Shrink Boot Reference Information (page 40).
3. Metric dimensions (mm) are indicated in parentheses.
4. O-Ring not supplied with Connector Designator A.
5. When maximum entry (page 21) is exceeded, Style 2 will be supplied. Dimensions E, F, G, & H will not apply. Please consult factory.

TABLE II - STANDARD FINISHES

GLENAIR SYMBOL	FINISH
B	Cadmium Plate, Olive Drab
M	Electroless Nickel
NF	Cadmium Plate, Olive Drab Over Electroless Nickel

See Back Cover for Complete Finish Information and Additional Finish Options

© 2005 Glenair, Inc. CAGE Code 06324 Printed in U.S.A.

Компания «ЭлектроПласт» предлагает заключение долгосрочных отношений при поставках импортных электронных компонентов на взаимовыгодных условиях!

Наши преимущества:

- Оперативные поставки широкого спектра электронных компонентов отечественного и импортного производства напрямую от производителей и с крупнейших мировых складов;
- Поставка более 17-ти миллионов наименований электронных компонентов;
- Поставка сложных, дефицитных, либо снятых с производства позиций;
- Оперативные сроки поставки под заказ (от 5 рабочих дней);
- Экспресс доставка в любую точку России;
- Техническая поддержка проекта, помощь в подборе аналогов, поставка прототипов;
- Система менеджмента качества сертифицирована по Международному стандарту ISO 9001;
- Лицензия ФСБ на осуществление работ с использованием сведений, составляющих государственную тайну;
- Поставка специализированных компонентов (Xilinx, Altera, Analog Devices, Intersil, Interpoint, Microsemi, Aeroflex, Peregrine, Syfer, Eurofarad, Texas Instrument, Miteq, Cobham, E2V, MA-COM, Hittite, Mini-Circuits,General Dynamics и др.);

Помимо этого, одним из направлений компании «ЭлектроПласт» является направление «Источники питания». Мы предлагаем Вам помощь Конструкторского отдела:

- Подбор оптимального решения, техническое обоснование при выборе компонента;
- Подбор аналогов;
- Консультации по применению компонента;
- Поставка образцов и прототипов;
- Техническая поддержка проекта;
- Защита от снятия компонента с производства.

Как с нами связаться

Телефон: 8 (812) 309 58 32 (многоканальный)
Факс: 8 (812) 320-02-42
Электронная почта: org@eplast1.ru
Адрес: 198099, г. Санкт-Петербург, ул. Калинина, дом 2, корпус 4, литера А.