LOW DROPOUT VOLTAGE REGULATOR

■ GENERAL DESCRIPTION

The NJM2871/A, NJM2872/A are low dropout voltage regulators designed for cellular phone application.
Advanced Bipolar technology achieves low noise, high ripple rejection and low quiescent current.

■ PACKAGE OUTLINE

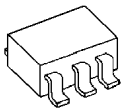

NJM2871F/AF
NJM2872F/AF

■ FEATURES

- ●High Ripple Rejection 70dB typ. (f=1kHz,Vo=3V Version)
- ●Output Noise Voltage Vno=30μVrms typ.(Cp=0.01μF)
- ●Output capacitor with 1.0uF ceramic capacitor (Vo≥2.7V)
- ●Output Current Io(max.)=150mA
- ●High Precision Output Vo±2%
  Vo±1%:A Version
- ●Low Dropout Voltage 0.10V typ. (Io=60mA)
- ●ON/OFF Control (Active High)
- ●Operating Voltage Range +2.5V~+14V (Vo≤2.0V version)
- ●Internal Short Circuit Current Limit
- ●Internal Thermal Overload Protection
- ●Bipolar Technology
- ●Package Outline SOT-23-5

■ PIN CONFIGURATION

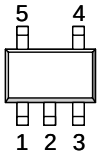

NJM2871F/AF

PIN FUNCTION
1. CONTROL (Active High)
2. GND
3. NOISE BYPASS
4. V_{OUT}
5. V_{IN}

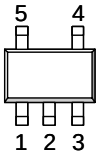

NJM2872F/AF

PIN FUNCTION
1.V_{IN}
2.GND
3.CONTROL (Active High)
4.NOISE BYPASS
5.V_{OUT}

■ EQUIVALENT CIRCUIT

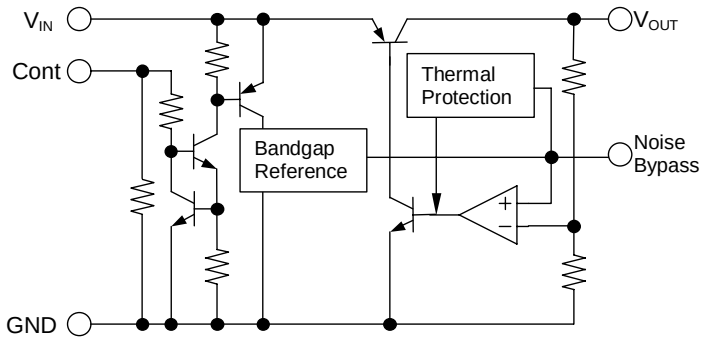

■ ABSOLUTE MAXIMUM RATINGS (Ta=25°C)

PARAMETER	SYMBOL	RATINGS		UNIT
Input Voltage	V_{IN}	+14		V
Control Voltage	V_{CONT}	+14(*1)		V
Power Dissipation	P_D	SOT-23-5	350(*2)	mW
			200(*3)	
Operating Temperature	Topr	–40 ~ +85		°C
Storage Temperature	Tstg	–40 ~ +125		°C

(*1): When input voltage is less than +14V, the absolute maximum control voltage is equal to the input voltage.
(*2): Mounted on glass epoxy board based on EIA/JEDEC. (114.3x76.2x1.6mm: 2Layers)
(*3): Device itself.

■ Operating voltage

V_{IN}=+2.5 ~ +14V (In case of Vo<2.1V version)

■ ELECTRICAL CHARACTERISTICS

(Vo>2.0V version : V_{IN}=Vo+1V, C_{IN}=0.1µF, Co=1.0µF: Vo≥2.7V (Co=2.2µF: Vo≤2.6V), Cp=0.01µF, Ta=25°C)

PARAMETER	SYMBOL	TEST CONDITION	MIN.	TYP.	MAX.	UNIT
Output Voltage	Vo	Io=30mA	-2%	–	+2%	V
		Io=30mA, A Version	-1%	–	+1%	V
Quiescent Current	I_Q	Io=0mA, expect Icont	–	120	180	µA
Quiescent Current at Control OFF	$I_{Q(OFF)}$	V_{CONT}=0V	–	–	100	nA
Output Current	Io	Vo–0.3V	150	200	-	mA
Line Regulation	$\Delta Vo/\Delta V_{IN}$	V_{IN}=Vo+1V ~ Vo+6V, Io=30mA	–	–	0.10	%/V
Load Regulation	ΔVo/ΔIo	Io=0 ~ 100mA	–	–	0.03	%/mA
Dropout Voltage	ΔV_{I-O}	Io=60mA	–	0.10	0.18	V
Ripple Rejection	RR	ein=200mVrms,f=1kHz, Io=10mA Vo=3V Version	–	70	–	dB
Average Temperature Coefficient of Output Voltage	ΔVo/ΔTa	Ta=0~85°C, Io=10mA, Vo=3V Version	–	±50	–	ppm/°C
Output Noise Voltage	V_{NO}	f=10Hz~80kHz, Io=10mA, Vo=3V Version	–	30	–	µVrms
Control Voltage for ON-state	$V_{CONT(ON)}$		1.6	–	–	V
Control Voltage for OFF-state	$V_{CONT(OFF)}$		–	–	0.6	V

(Vo≤2.0V version : V_{IN}=Vo+1V, C_{IN}=0.1µF, Co=4.7µF, Cp=0.01µF, Ta=25°C)

PARAMETER	SYMBOL	TEST CONDITION	MIN.	TYP.	MAX.	UNIT
Output Voltage	Vo	Io=30mA	-2%	–	+2%	V
		Io=30mA, A Version	-1%	–	+1%	V
Quiescent Current	I_Q	Io=0mA, expect Icont	–	120	180	µA
Quiescent Current at Control OFF	$I_{Q(OFF)}$	V_{CONT}=0V	–	–	100	nA
Output Current	Io	Vo–0.3V	150	200	-	mA
Line Regulation	ΔVo/ΔV_{IN}	V_{IN}=Vo+1V ~ Vo+6V, Io=30mA	–	–	0.10	%/V
Load Regulation	ΔVo/ΔIo	Io=0 ~ 100mA	–	–	0.03	%/mA
Ripple Rejection	RR	ein=200mVrms,f=1kHz, Io=10mA Vo=1.8V Version	–	75	–	dB
Average Temperature Coefficient of Output Voltage	ΔVo/ΔTa	Ta=0~85°C, Io=10mA, Vo=1.8V Version	–	±50	–	ppm/°C
Output Noise Voltage	V_{NO}	f=10Hz~80kHz, Io=10mA, Vo=1.8V Version	–	22	–	µVrms
Control Voltage for ON-state	$V_{CONT(ON)}$		1.6	–	–	V
Control Voltage for OFF-state	$V_{CONT(OFF)}$		–	–	0.6	V

The above specification is a common specification for all output voltages.
Therefore, it may be different from the individual specification for a specific output voltage.

■ OUTPUT VOLTAGE RANK LIST

Device Name	V_{OUT}
NJM287××15	1.5V
NJM287××18	1.8V
NJM287××21	2.1V
NJM287××23	2.3V
NJM287××25	2.5V
NJM287××26	2.6V
NJM287××27	2.7V
NJM287××28	2.8V

Device Name	V_{OUT}
NJM287××285	2.85V
NJM287××29	2.9V
NJM287××03	3.0V
NJM287××31	3.1V
NJM287××32	3.2V
NJM287××33	3.3V
NJM287××34	3.4V
NJM287××35	3.5V

Device Name	V_{OUT}
NJM287××355	3.55V
NJM287××38	3.8V
NJM287××04	4.0V
NJM287××45	4.5V
NJM287××46	4.6V
NJM287××47	4.7V
NJM287××05	5.0V

■ TEST CIRCUIT

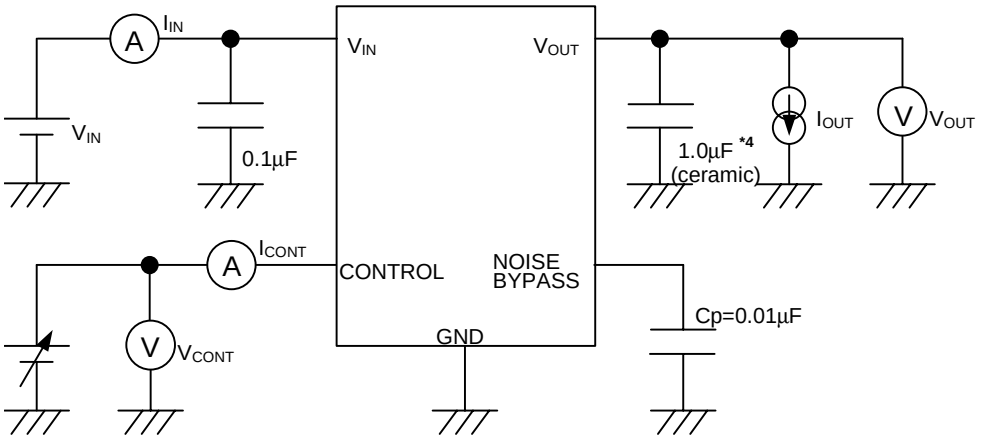

*4 2.0V < Vo ≤ 2.6V version : Co=2.2µF(ceramic)
Vo ≤ 2.0V version : Co=4.7µF(ceramic)

■ TYPICAL APPLICATION

① In case that ON/OFF Control is not required:

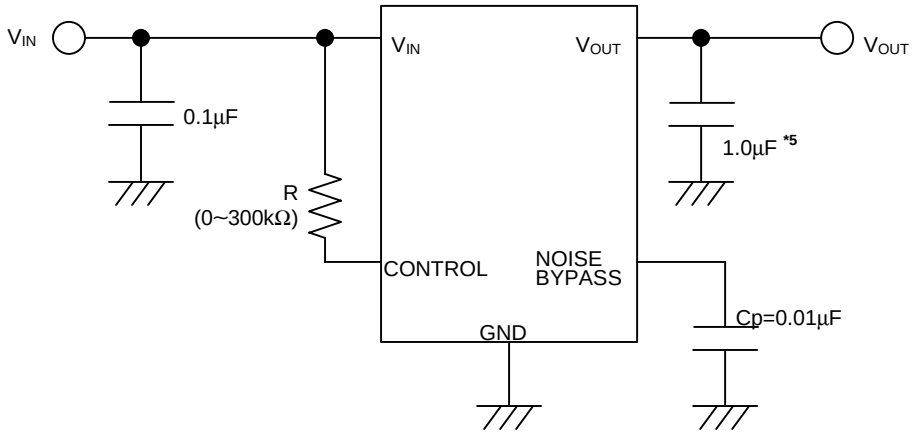

*5 2.0V < Vo ≤ 2.6V version : Co=2.2μF
Vo ≤ 2.0V version : Co=4.7μF

Connect control terminal to V_{IN} terminal

② In use of ON/OFF CONTROL:

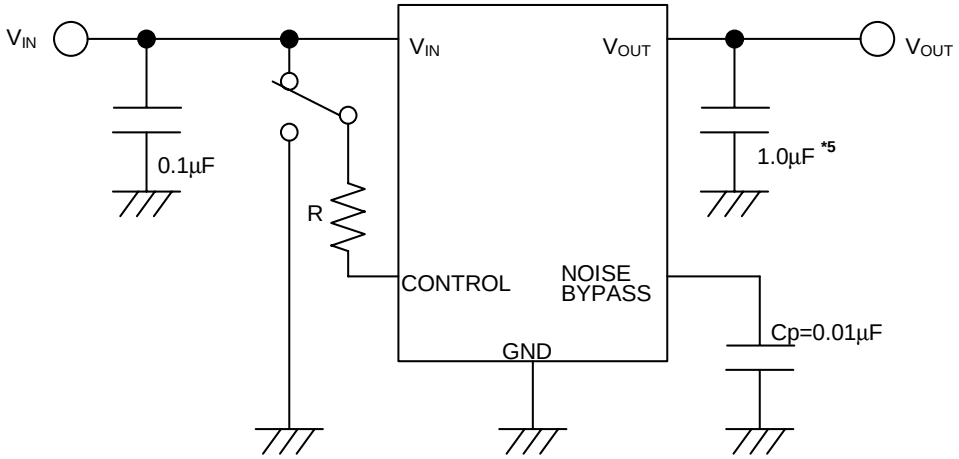

*5 2.0V < Vo ≤ 2.6V version : Co=2.2μF
Vo ≤ 2.0V version : Co=4.7μF

State of control terminal:

- "H"→ output is enabled.
- "L" or "open" → output is disabled.

∗Noise bypass Capacitance Cp

Noise bypass capacitance Cp reduces noise generated by band-gap reference circuit. Noise level and ripple rejection will be improved when larger Cp is used. Use of smaller Cp value may cause oscillation.
Use the Cp value of 0.01μF greater to avoid the problem.

∗In the case of using a resistance "R" between V_{IN} and control.

The current flow into the control terminal while the IC is ON state (I_{CONT}) can be reduced when a pull up resistance "R" is inserted between V_{IN} and the control terminal.
The minimum control voltage for ON state ($V_{CONT\,(ON)}$) is increased due to the voltage drop caused by I_{CONT} and the resistance "R". The I_{CONT} is temperature dependence as shown in the "Control Current vs. Temperature" characteristics. Therefore, the resistance "R" should be carefully selected to ensure the control voltage exceeds the $V_{CONT\,(ON)}$ over the required temperature range.

■ ELECTRICAL CHARACTERISTICS

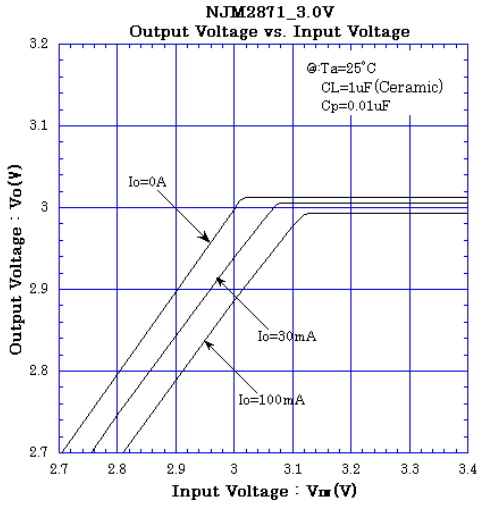

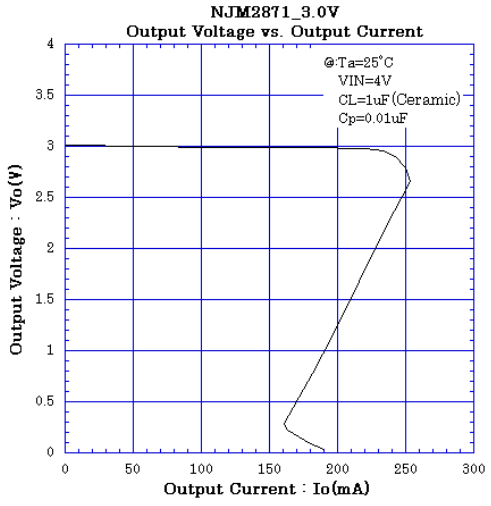

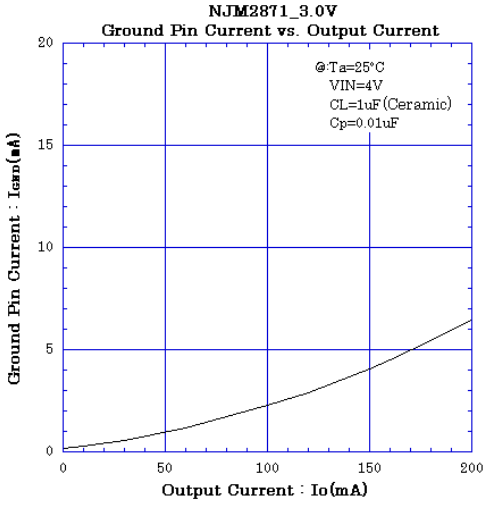

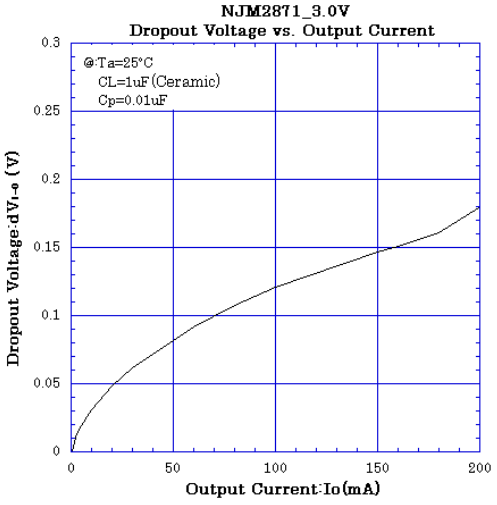

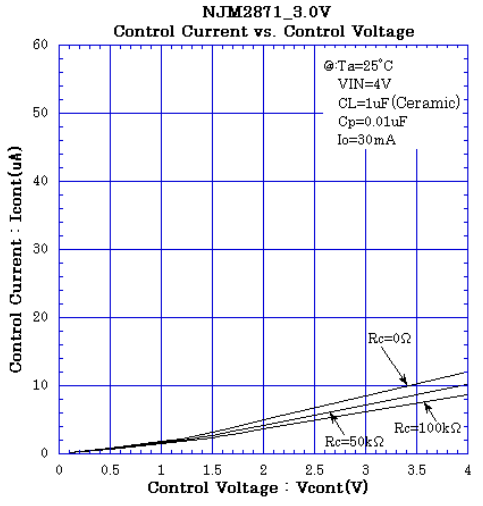

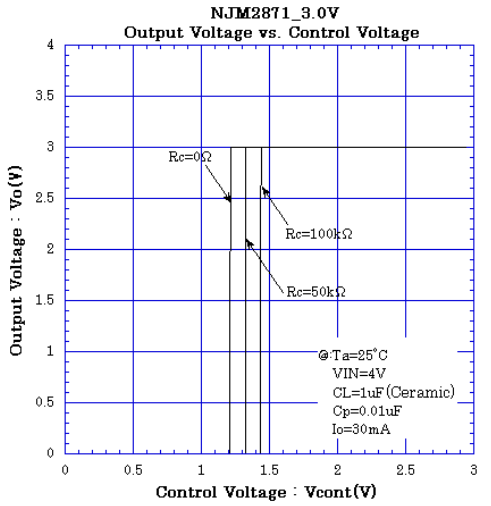

■ ELECTRICAL CHARACTERISTICS

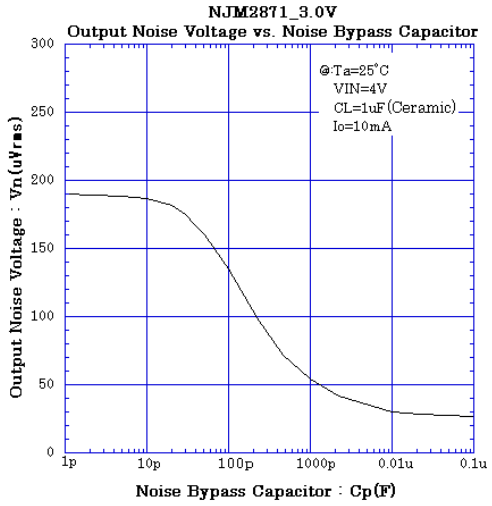

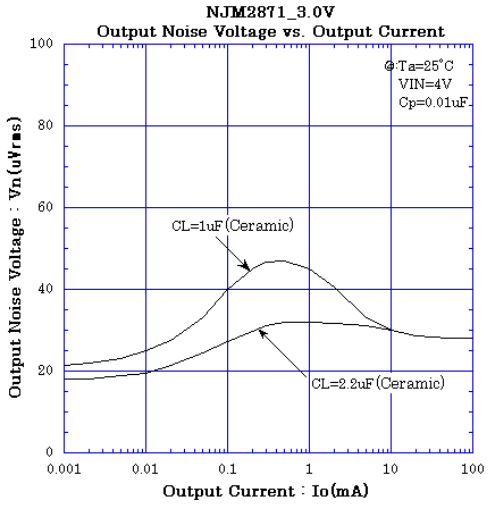

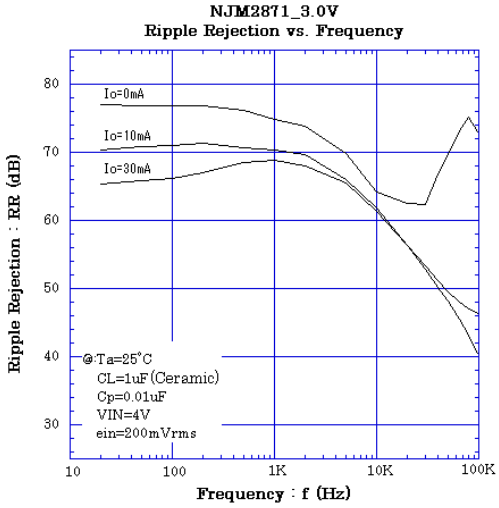

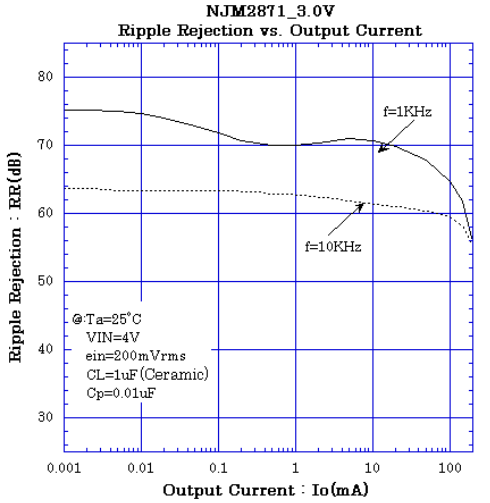

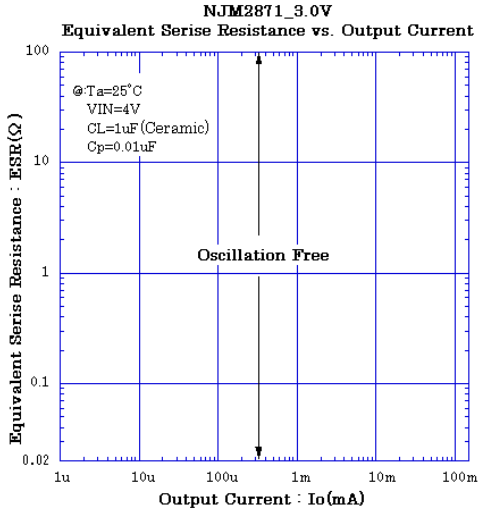

■ ELECTRICAL CHARACTERISTICS

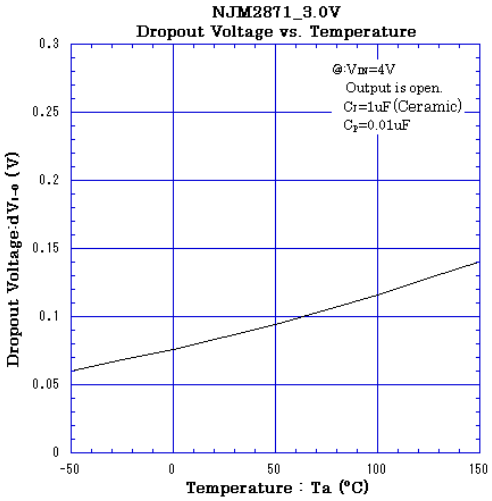

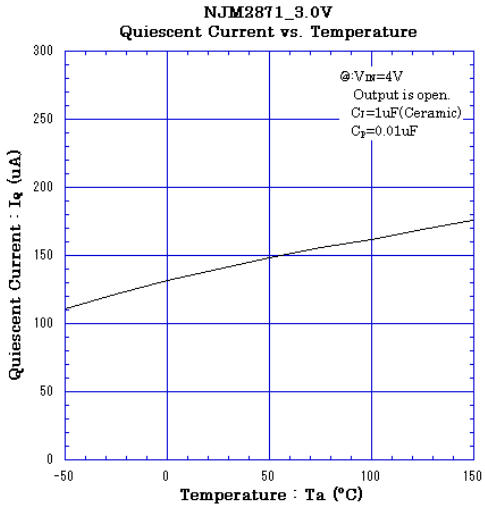

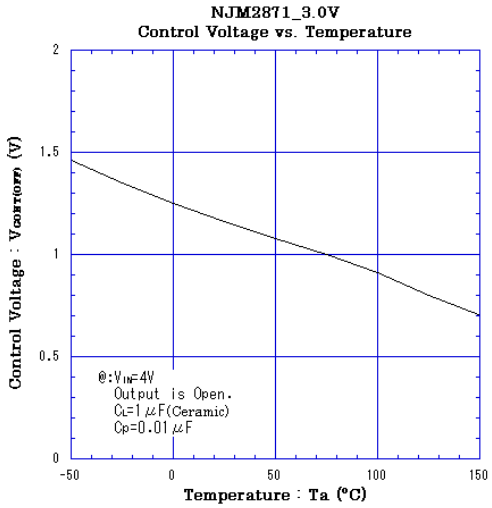

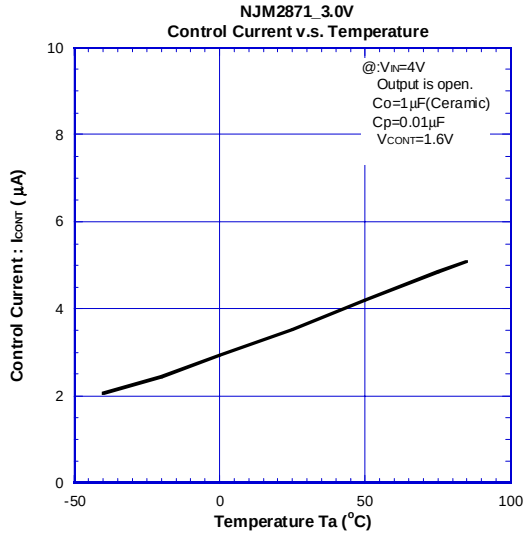

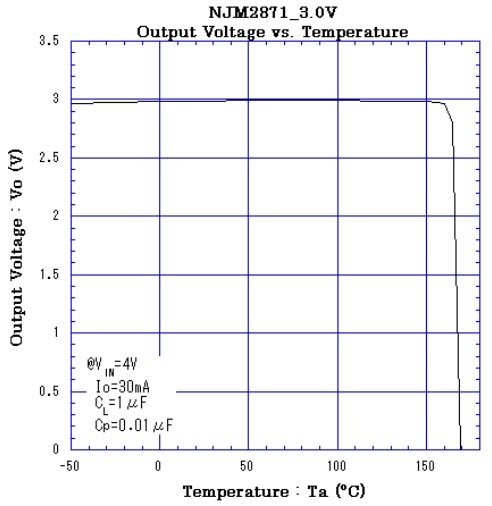

[CAUTION]
The specifications on this databook are only given for information , without any guarantee as regards either mistakes or omissions. The application circuits in this databook are described only to show representative usages of the product and not intended for the guarantee or permission of any right including the industrial rights.

Mouser Electronics

Authorized Distributor

Click to View Pricing, Inventory, Delivery & Lifecycle Information:

NJR:

NJM2871AF18-TE1 NJM2872AF29-TE1 NJM2871AF35-TE1 NJM2872F04-TE1 NJM2872F33-TE1 NJM2872F33-TE2 NJM2872F45-TE1 NJM2871AF28-TE1 NJM2872AF18-TE1 NJM2872F15-TE1 NJM2871AF04-TE1 NJM2872F21-TE1 NJM2872F35-TE1 NJM2872AF05-TE1 NJM2872F29-TE1 NJM2871AF32-TE1 NJM2871AF285-TE1 NJM2872AF26-TE1 NJM2872AF38-TE1 NJM2872F26-TE1 NJM2872AF31-TE1 NJM2872AF47-TE1 NJM2871AF21-TE1 NJM2871AF38-TE1 NJM2871AF15-TE1 NJM2872F27-TE1 NJM2872F05-TE1 NJM2872AF34-TE1 NJM2871AF34-TE1 NJM2872F23-TE1 NJM2871AF25-TE1 NJM2872AF33-TE1 NJM2872AF28-TE1 NJM2872AF04-TE1 NJM2871AF05-TE1 NJM2871AF26-TE1 NJM2871AF29-TE1 NJM2871AF31-TE1 NJM2872AF285-TE1 NJM2872F03-TE2 NJM2872F03-TE1 NJM2872F18-TE1 NJM2872F18-TE2 NJM2872F38-TE1 NJM2872AF27-TE1 NJM2872F32-TE1 NJM2872F32-TE2 NJM2871AF27-TE1 NJM2872AF21-TE1 NJM2871AF03-TE1 NJM2872AF35-TE1 NJM2872F25-TE2 NJM2872AF32-TE1 NJM2872F25-TE1 NJM2872F28-TE1 NJM2872F28-TE2 NJM2872AF15-TE1 NJM2872F285-TE2 NJM2872F285-TE1 NJM2872AF25-TE1 NJM2871AF33-TE1 NJM2872AF03-TE1 NJM2872F34-TE1 NJM2872AF03-TE2 NJM2872AF46-TE1 NJM2871AF33-TE2 NJM2872F05-TE2 NJM2872F31-TE2 NJM2872F15-TE2 NJM2872AF355-TE1 NJM2872F29-TE2

Компания «ЭлектроПласт» предлагает заключение долгосрочных отношений при поставках импортных электронных компонентов на взаимовыгодных условиях!

Наши преимущества:

- Оперативные поставки широкого спектра электронных компонентов отечественного и импортного производства напрямую от производителей и с крупнейших мировых складов;
- Поставка более 17-ти миллионов наименований электронных компонентов;
- Поставка сложных, дефицитных, либо снятых с производства позиций;
- Оперативные сроки поставки под заказ (от 5 рабочих дней);
- Экспресс доставка в любую точку России;
- Техническая поддержка проекта, помощь в подборе аналогов, поставка прототипов;
- Система менеджмента качества сертифицирована по Международному стандарту ISO 9001;
- Лицензия ФСБ на осуществление работ с использованием сведений, составляющих государственную тайну;
- Поставка специализированных компонентов (Xilinx, Altera, Analog Devices, Intersil, Interpoint, Microsemi, Aeroflex, Peregrine, Syfer, Eurofarad, Texas Instrument, Miteq, Cobham, E2V, MA-COM, Hittite, Mini-Circuits,General Dynamics и др.);

Помимо этого, одним из направлений компании «ЭлектроПласт» является направление «Источники питания». Мы предлагаем Вам помощь Конструкторского отдела:

- Подбор оптимального решения, техническое обоснование при выборе компонента;
- Подбор аналогов;
- Консультации по применению компонента;
- Поставка образцов и прототипов;
- Техническая поддержка проекта;
- Защита от снятия компонента с производства.

Как с нами связаться

Телефон: 8 (812) 309 58 32 (многоканальный)
Факс: 8 (812) 320-02-42
Электронная почта: org@eplast1.ru
Адрес: 198099, г. Санкт-Петербург, ул. Калинина, дом 2, корпус 4, литера А.