SYMBOL DEFINITION		
A DIMENSION WITHOUT AN INSPECTION REPORT SYMBOL ( ) DOES NOT REQUIRE INSPECTION. IT MAY BE CONTROLLED ON THE INDIVIDUAL COMPONENT DRAWING.	TOTAL NO OF INSPECTIONS REQUIRED	19
	LAST NO. USED	19

MISSING SYMBOLS
NO MISSING SYMBOL NUMBER

DWG STATUS DATE	STG	REV	N/P	CHG	ZONE	REVISION HISTORY	AUTH	DR	APVD 1	APVD 2
26NO96	-	-	-	-		ALL PARTS-PID CREATED FROM SEPARATE PID'S NO REV UPDATED REQ'D 15317765 RELEASED TO REV "A"	960005	WTP	WTP	WTP
26NO96	-	-	-	-		ALL ACTIVE PARTS-REVISED-REV LEVELS ADVANCED	176842	WTP	WTP	WTP
13JA96	-	-	-	-		12047581-12059894-12191889 & 15317765 REVISED-REV LEVELS ADVANCED	176913	EMB	EMB	AUG
11MR97	-	-	-	-		15317765 REVISED-REV LEVEL ADVANCED	178061	MVA	MVA	MVA
08MY97	-	-	-	-		ALL ACTIVE PARTS-REVISED-NO REV UPDATE REQ'D	177551	PHC	PHC	JVS
08MY97	-	-	-	-		15355307-RELEASED TO REV "A"	970005	PHC	PHC	JVS
15JL97	-	-	-	-		12191889-PID UPDATED- NO REV UPDATE REQ'D	181156	EMB	EMB	RPO
18JA05	R	01	-	-		REVISED MATERIAL SPEC	262972	MM	MM	BG
30MR05	R	02	-	-		ALL ACTIVE PARTS - TOLERANCE ON DIM #4 WAS ±0.1	265258	LMB	LMB	MM
19MY05	R	03	-	-		ALL ACTIVE PARTS - UPDATED PDM ATTRIBUTES	268260	GPS	JVM	BDG
16AU05	R	04	-	-		ALL ACTIVE PARTS - ADDED STAMP I.D. LABEL	270616	RTV	FRG	MKM
22NO05	R	05	-	-		12191889 - RESTRICTED AND ADDED PROCESS NOTE # 2, 15305307 - RESTRICTED AND CABLE SIZE WAS 0.35-0.5	274640	MDH	JVM	BDG
15JA09	R	06	-	-		ALL ACTIVE PARTS - ADDED LABEL AND DIM 2.5 +0.1/-0.15 WAS 2.5 ±0.1	407112	SCR	ECB	GEM
08AP09	R	07	-	-		12040993 - OBSOLETE & REPLACED BY 12047581	407299	JTZ	FKV	RAP
10JA11	R	08	-	-		ALL ACTIVE PARTS- UPDATED PDM ATTRIBUTES	413005	LHT	LHT	LHT
05FE13	R	09	-	-		ALL ACTIVE PARTS- UPDATED PDM ATTRIBUTES	421357	JRV	FRE	JRV

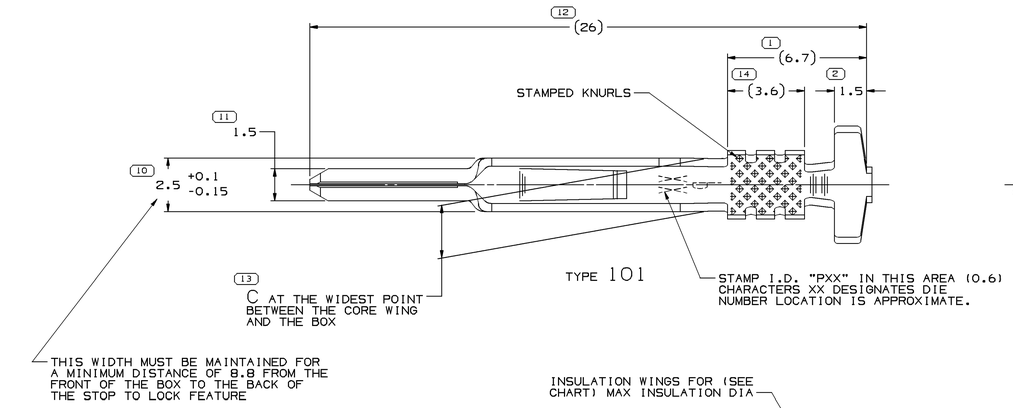

TYPE 101

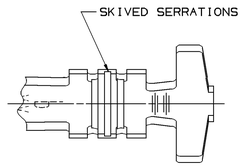

TYPE 102
SAME AS TYPE 101
EXCEPT AS SHOWN

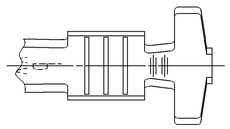

TYPE 103
SAME AS TYPE 101
EXCEPT AS SHOWN

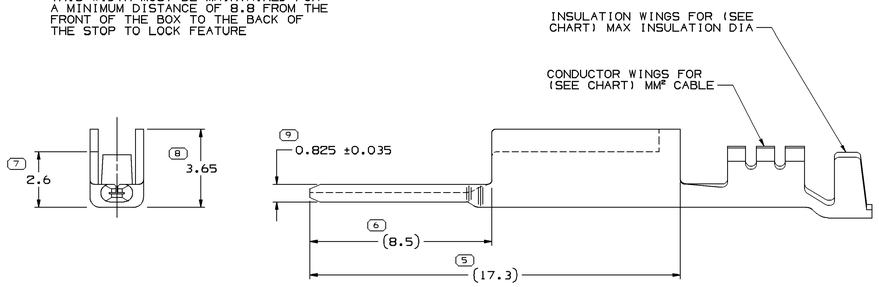

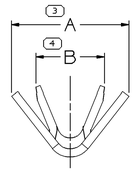

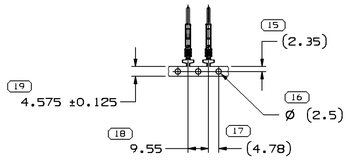

CARRIER STRIP VIEW

NOTES

1. UNLESS OTHERWISE SPECIFIED AND/OR INDICATED:

   DIMENSIONS ARE TO FACE OF VIEW SHOWN AND AUTOMATICALLY ROUNDED BY COMPUTER FOR INSPECTION (SEE MATH MODEL FOR PRECISE DIMENSIONS). FOR ALL OTHER DIMENSIONS NOT SHOWN BUT REQUIRED FOR TOOL BUILD, SEE MATH MODEL FOR PRECISE TOOL PATH DATA.

2. REFERENCE MATING COMPONENTS OR EQUIVALENT:

   TERMINAL 12047767
   MAX INSULATION CRIMP 3 HIGH X 2.6 WIDE.

PROCESS NOTE

1. LOOSE PLATING AND METAL 'FLAKES' TO BE WASHED FROM TERMINAL.

2. 12191889 IS SAME AS 12059894 BUT TERMINAL HAS TO BE WASHED AT MAKE DIE OR PROCESSED WITH NYOSIL-M25 LUBRICANT.

PART NO	REV	MAT'L SIZE	MAT'L SPEC	PART NO	REV	RESTRICTED USAGE	PROCESS NOTES	MAT'L SPEC	SIZE (MM²)	I.D.	DIA	TYPE	A ±0.3	B ±0.2	C MAX
		0.381 X 34.52		15305307	A8	RESTRICTED		M36173B3 C42500 1/2 HD	2(0.35, 0.6)	226		103	4.4	3.2	2.55
				15317765	D7	-		M36173B3 C42500 1/2 HD	0.35-0.5	21	1.1-1.3	101	2.5	2.4	2.55
				12191889	D8	RESTRICTED	2	M36173B3 C42500 1/2 HD	0.35-0.5	21	2.4-1.47	101	3.8	2.4	2.55
		0.381 X 34.52		12124731	B	-	1	M36173B3 C42500 1/2 HD	0.5-0.8	19	2.4-1.84	101	4.4	3.2	2.55
		0.381 X 34.52		12059894	F7	-		M36173B3 C42500 1/2 HD	0.35-0.5	21	2.4-1.47	101	3.8	2.4	2.55
		0.381 X 34.52		12047686	D	-		P3607ABN	0.35	22	1.86 MAX	102	3.6	2.2	2.6
12040993	J6	0.381 X 34.52	M1403383	12047581	J7	-		M36173B3 C42500 1/2 HD	0.5-0.8	19	2.4-1.84	101	4.4	3.2	2.55
		UNPLATED					PLATED			CABLE					

(11) PROCESS SENSITIVE DIMENSION

DIMENSIONS ENCLOSED IN ( ) INDICATE REFERENCE DIMENSIONS AND NO TOLERANCE LIMITS ARE ESTABLISHED

DIMENSIONAL RANGE (MM)	CHART D
FROM 0 TO 12	>12
TOLERANCE UNLESS OTHERWISE SPECIFIED	
±0.1	±0.2
ANGULAR TOLERANCE ±2°	

A LINE DRAWN THROUGH A PART NUMBER INDICATES THAT PHYSICAL PARTS ARE NOT AVAILABLE FOR ORDERING.

PART NUMBERS THAT DO NOT HAVE A LINE PRESENT INDICATE THAT PHYSICAL PARTS ARE AVAILABLE FOR ORDERING.

CONTACT DELPHI SALES TO ASSURE AVAILABILITY OF PARTS.

DWG TYPE: PART DRAWING

STYLE

VOLUME (QUP) | DISTR CODE: D

UNLESS OTHERWISE SPECIFIED

THIS DOCUMENT IS IN ACCORDANCE WITH ASME Y14.5M-1994 AS AMENDED BY THE GM GLOBAL DIMENSIONING AND TOLERANCING ADDENDUM-2001. SEPARATE PATTERNS OF FEATURES MAY BE DRAWN SEPARATELY PER/WORLESS OF DATUM REFERENCES.

ALL DIMENSIONS ARE IN MILLIMETERS

REFERENCE

THIRD ANGLE PROJECTION

DO NOT SCALE

USE MATH DATA

NX

DELPHI
DELPHI PACKARD ELECTRICAL/ELECTRONIC ARCHITECTURE
WARREN, OH
COPYRIGHT 1996 DELPHI CORPORATION AND/OR ITS AFFILIATES.
ALL RIGHTS RESERVED.
(REVISED 2011)
THIS DRAWING IS THE PROPERTY OF DELPHI CORPORATION AND CONTAINS DELPHI CONFIDENTIAL INFORMATION. THE REPRODUCTION, DISTRIBUTION AND UTILIZATION OF THIS DOCUMENT OR ITS RELATED CAD MATH DATA, AS WELL AS COMMUNICATION OF ANY CONTENT TO OTHERS, WITHOUT EXPRESS AUTHORIZATION, IS PROHIBITED.

		DATE
DR		
APVD1	W. TURNBULL	22NO96
APVD2	W. TURNBULL	22NO96
APVD3	M. CHUPAK	22NO96
APVD4		
APVD5		

SUBSTANCES OF CONCERN AND RECYCLED CONTENT PER DELPHI 10949001

MATERIAL: SEE CHART

DRAWING NAME: TAXI TERM M M/P 150

DRAWING NUMBER: 12040995

SIZE	SCALE	FRAME NO	SHEET NO	STG	REV	N/P
A0	10:1	1 OF 1	1 OF 3	R	09	-

Компания «ЭлектроПласт» предлагает заключение долгосрочных отношений при поставках импортных электронных компонентов на взаимовыгодных условиях!

Наши преимущества:

- Оперативные поставки широкого спектра электронных компонентов отечественного и импортного производства напрямую от производителей и с крупнейших мировых складов;
- Поставка более 17-ти миллионов наименований электронных компонентов;
- Поставка сложных, дефицитных, либо снятых с производства позиций;
- Оперативные сроки поставки под заказ (от 5 рабочих дней);
- Экспресс доставка в любую точку России;
- Техническая поддержка проекта, помощь в подборе аналогов, поставка прототипов;
- Система менеджмента качества сертифицирована по Международному стандарту ISO 9001;
- Лицензия ФСБ на осуществление работ с использованием сведений, составляющих государственную тайну;
- Поставка специализированных компонентов (Xilinx, Altera, Analog Devices, Intersil, Interpoint, Microsemi, Aeroflex, Peregrine, Syfer, Eurofarad, Texas Instrument, Miteq, Cobham, E2V, MA-COM, Hittite, Mini-Circuits,General Dynamics и др.);

Помимо этого, одним из направлений компании «ЭлектроПласт» является направление «Источники питания». Мы предлагаем Вам помощь Конструкторского отдела:

- Подбор оптимального решения, техническое обоснование при выборе компонента;
- Подбор аналогов;
- Консультации по применению компонента;
- Поставка образцов и прототипов;
- Техническая поддержка проекта;
- Защита от снятия компонента с производства.

Как с нами связаться

Телефон: 8 (812) 309 58 32 (многоканальный)
Факс: 8 (812) 320-02-42
Электронная почта: org@eplast1.ru
Адрес: 198099, г. Санкт-Петербург, ул. Калинина, дом 2, корпус 4, литера А.