Power Relay F7

- **Pin assignment similar to ISO 7588 part 1**
- **Customized versions on request**
  - **– 24VDC versions with contact gap >0.8mm**
  - **– Integrated components (e.g. resistor, diode)**
  - **– Customized marking/color**
  - **– Special covers (e.g. notches, release features, brackets)**

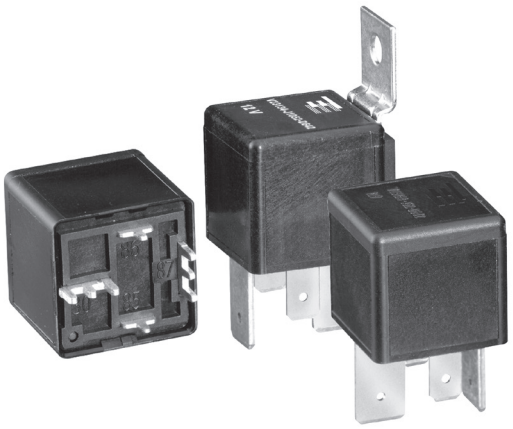

F134J_a_bw

Typical applications
Cross carline up to 70A for example: ABS control, cooling fan, energy management, engine control, glow plug, heated front screen, ignition, lamps: front, rear, fog light, main switch/supply relay.

Contact Data

Contact arrangement	1 form A, 1 NO	1 form A, 1 NO	1 form A, 1 NO
Contact gap	-	-	>0.8mm
Rated voltage	12VDC	24VDC	24VDC[1)]
Limiting continuous current			
23°C	70A	70A	70A
85°C	50A	50A	50A
125°C	30A	30A	30A
Limiting making current[2)]	240A	240A	240A
Limiting breaking current	70A	25A	40A
Limiting short-time current overload current, ISO 8820-3[3)]	1.35 x 50A, 1800s 2.00 x 50A, 5s 3.50 x 50A, 0.5s 6.00 x 50A, 0.2s		
Jump start test, ISO 16750-1	24VDC for 5min, conducting nominal current at 23°C		
Contact material	Silver based		
Min. recommended contact load[4)]	1A at 5VDC		
Initial voltage drop, form A (NO) contact at 10A, typ./max.	10/300mV		
Frequency of operation at nominal load	6 ops./min (0.1Hz)		
Operate/release time typ.	7/2ms[5)]		
Electrical endurance			
resistive load at 14VDC	>1x10^5 ops. 70A	-	-
	>2x10^5 ops. 50A	-	-
resistive load at 28VDC	-	>1x10^{5}ops. 25A	>1x10^5 ops. 50A

Contact Data (continued)

Mechanical endurance	>1x10^{7}ops.

1) Special high performance 24VDC version with contact gap >0.8mm, part number V23134-A0056-X408 (see part number table).
2) The values apply to a resistive or inductive load with suitable spark suppression and at maximum 14VDC for 12VDC or 28VDC for 24VDC load voltages. For a load current duration of maximum 3s for a make/break ratio of 1:10.
3) Current and time are compatible with circuit protection by a typical automotive fuse. Relay will make, carry and break the specified current.
4) See chapter Diagnostics of Relays in our Application Notes or consult the internet at http://relays.te.com/appnotes/
5) For unsuppressed relay coil. A low resistive suppression device in parallel to the relay coil increases the release time and reduces the lifetime caused by increased erosion and/or higher risk of contact tack welding.

Coil Data

Rated coil voltage	12VDC, 24VDC

Coil versions, DC coil

Coil code	Rated voltage VDC	Operate voltage VDC	Release voltage VDC	Coil resistance[6)] Ω±10%	Rated coil power[6)] W
052	12	7.2	1.6	90	1.6
053	24	14.4	3.2	324	1.8
056	24	16.0	4.0	268	2.1
065	24	14.4	2.4	288	2.0

6) Without components in parallel.
All figures are given for coil without pre-energization, at ambient temperature +23°C.

Max. DC load breaking capacity

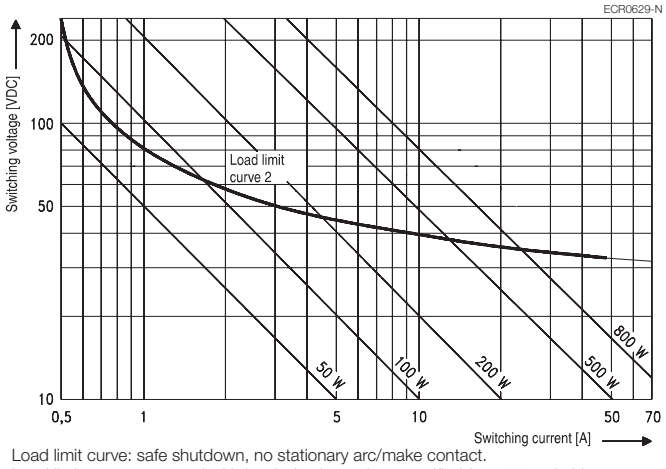

Load limit curve: safe shutdown, no stationary arc/make contact.
Load limit curve measured with low inductive resistors verified for 1000 switching events.

Coil operating range

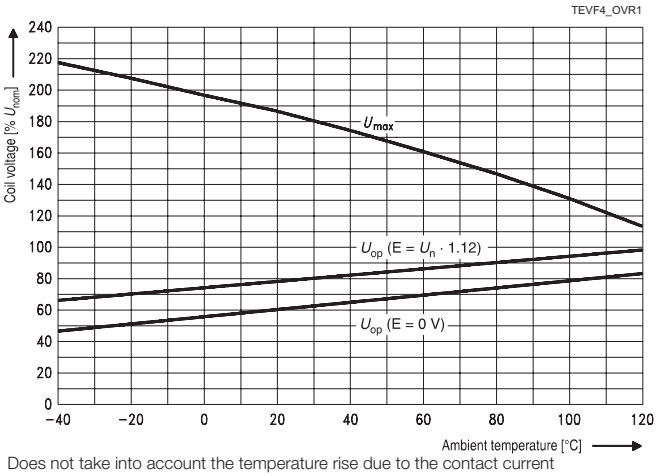

Does not take into account the temperature rise due to the contact current
E = pre-energization.

04-2013, Rev. 0413
www.te.com
© 2013 Tyco Electronics Corporation,
a TE Connectivity Ltd. company.

Catalog and product specification according to IEC 61810-1 and to be used only together with the 'Definitions' section.

Catalog and product data is subject to the terms of the disclaimer and all chapters of the 'Definitions' section, available at http://relays.te.com/definitions

Catalog, product data, 'Definitions' section, application notes and all specifications are subject to change.

Power Relay F7 (Continued)

Insulation Data	
Initial dielectric strength	
between open contacts	$500V_{rms}$
between contact and coil	$500V_{rms}$
between adjacent contacts	$500V_{rms}$
Load dump test	
ISO 7637-1 (12VDC), test pulse 5	V_s=+86.5VDC
ISO 7637-2 (24VDC), test pulse 5	V_s=+200VDC

Other Data	
EU RoHS/ELV compliance	compliant
Protection to heat and fire according UL-94	HB or better[7)]
Ambient temperature	-40 to 125°C
Climatic cycling with condensation	
EN ISO 6988	6 cycles, storage 8/16h
Temperature cycling,	
IEC 60068-2-14, Nb	10 cycles, -40/+85°C (5°C/min)
Damp heat cyclic,	
IEC 60068-2-30, Db, Variant 1	6 cycles, upper air temp. 55°C
Damp heat constant, IEC 60068-2-3, Ca	56 days
Category of environmental protection,	
IEC 61810	RTI – dustproof, RT III – sealed
Degree of protection, IEC 60529	IP54 (dustproof), IP67 (sealed)
Corrosive gas	
IEC 60068-2-42	$10\pm2cm^3/m^3$ SO_2, 10 days
IEC 60068-2-43	$1\pm0.3cm^3/m^3$ H_2S, 10 days
Vibration resistance (functional)	
IEC 60068-2-6 (sine sweep)	10 to 500Hz, min. 5g[8)]
Shock resistance (functional)	
IEC 60068-2-27 (half sine)	6ms, min. 30g.[8)]
Drop test, free fall	
IEC 60068-2-32	1m onto concrete

Other Data (continued)	
Terminal type	plug-in, QC/ PCB
Cover retention	
axial force	150N
pull force	150N
push force	150N
Terminal retention	
pull force	100N
push force	100N
resistance to bending	10N[8)]
force applied to side	10N[8)]
torque	0.3Nm
Weight	approx. 38g (1.3oz)
Resistance to soldering heat THT	
IEC 60068-2-20	260°C, 10s
Packaging unit	
plug-in:	210 pcs.
plug-in with bracket:	208 pcs.
PCB	315 pcs.

7) Refers to used materials.
8) No change in the switching state >1µs. Valid for NC contacts, NO contact values significantly higher.
8) Values apply 2mm from the end of the terminal. When the force is removed, the terminal must not have moved by more than 0.3mm.

Accessories	
For details see datasheet	Connectors for Maxi ISO Relays

Terminal Assignment

NO
1 form A, NO

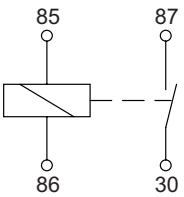

NOR
1 form A, NO with resistor

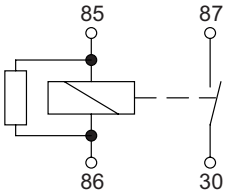

NOD
1 form A, NO with diode

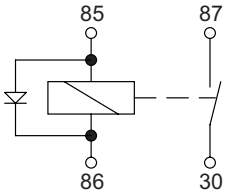

04-2013, Rev. 0413
www.te.com
© 2013 Tyco Electronics Corporation,
a TE Connectivity Ltd. company.

Catalog and product specification according to IEC 61810-1 and to be used only together with the 'Definitions' section.

Catalog and product data is subject to the terms of the disclaimer and all chapters of the 'Definitions' section, available at http://relays.te.com/definitions

Catalog product data, 'Definitions' section, application notes and all specifications are subject to change.

Power Relay F7 (Continued)

Dimensions

Power Relay F7 with quick connect terminals

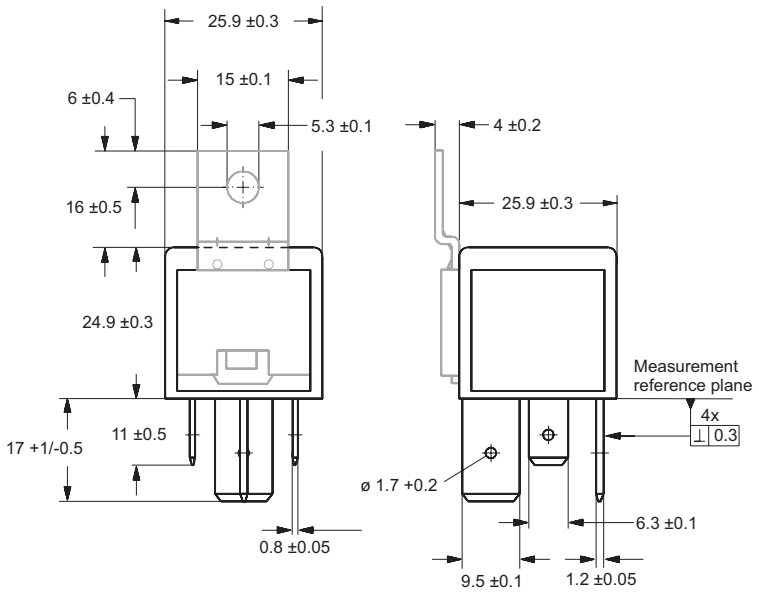

Quick connect terminal similar to ISO 8092-1

View of the terminals (bottom view)

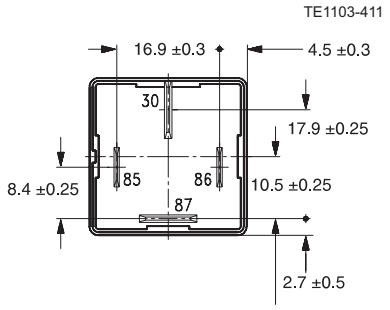

Power Relay F7 with PCB terminals

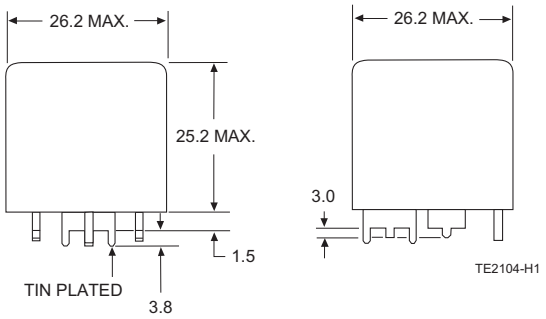

View of the terminals (bottom view)

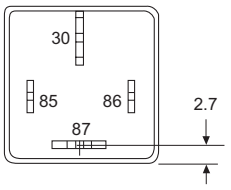

PCB Layout

Bottom view on solder pins

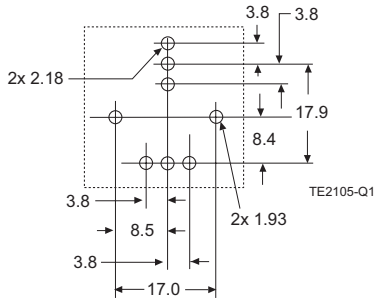

04-2013, Rev. 0413
www.te.com
© 2013 Tyco Electronics Corporation,
a TE Connectivity Ltd. company.

Catalog and product specification according to IEC 61810-1 and to be used only together with the 'Definitions' section.

Catalog and product data is subject to the terms of the disclaimer and all chapters of the 'Definitions' section, available at http://relays.te.com/definitions

Catalog, product data, 'Definitions' section, application notes and all specifications are subject to change.

Power Relay F7 (Continued)

Product code structure

Typical product code: **V23134 -J 0 052 -D642**

Type
- **V23134** Power Relay F

Contact arrangement
- **J** 1 form A, 1 NO

Cover
- **0** Standard
- **1** Bracket near terminal 30 ISO

Coil
- **052** 12VDC
- **053** 24VDC
- **056** 24VDC (contact gap >0.8mm)
- **065** 24VDC

Terminal/arrangement
- **D642** Plug-in/NO
- **Xnnn** Customized (nnn: version number)

Product code	Arrangement	Cover	Coil suppr.	Circuit[1)]	Coil	Cont. material	Terminals	Part number
V23134-J0052-D642	1 form A, 1 NO	Standard		NO	12VDC	Silver based	Plug-in, QC	7-1393303-3
V23134-J0052-X429			Resistor 680Ω	NOR				1-1414147-0
V23134-J0052-X439			Diode (cathode 86)	NOD				1-1414286-0
V23134-J0052-X455			Resistor 470Ω	NOR			PCB	1-1414610-0
V23134-J0052-X511				NO				3-1415001-2
V23134-J0052-X461			Resistor 560Ω	NOR			Plug-in, QC[3)]	1-1414469-0
V23134-J0053-D642				NO	24VDC		Plug-in, QC	9-1393303-7
V23134-J0056-X408[2)]			Resistor 1200Ω	NOR			Plug-in, QC[3)]	0-1393304-5
V23134-J0065-X497[4)]				NO			PCB	3-1414937-3
V23134-J1052-D642		Bracket			12VDC		Plug-in, QC	0-1393304-9
V23134-J1052-X281			Resistor 560Ω	NOR				1-1393304-0
V23134-J1053-D642				NO	24VDC			1-1393304-1

1) See terminal assignment diagrams.
2) Special feature: contact gap >0.8mm.
3) Special feature: 14.5mm load terminals.
4) Packed in tray with 300 pcs. per unit.
Other types on request.
This list represents the most common types and does not show all variants covered by this datasheet.

04-2013, Rev. 0413
www.te.com
© 2013 Tyco Electronics Corporation,
a TE Connectivity Ltd. company.

Catalog and product specification according to IEC 61810-1 and to be used only together with the 'Definitions' section.

Catalog and product data is subject to the terms of the disclaimer and all chapters of the 'Definitions' section, available at http://relays.te.com/definitions

Catalog product data, 'Definitions' section, application notes and all specifications are subject to change.

Компания «ЭлектроПласт» предлагает заключение долгосрочных отношений при поставках импортных электронных компонентов на взаимовыгодных условиях!

Наши преимущества:

- Оперативные поставки широкого спектра электронных компонентов отечественного и импортного производства напрямую от производителей и с крупнейших мировых складов;
- Поставка более 17-ти миллионов наименований электронных компонентов;
- Поставка сложных, дефицитных, либо снятых с производства позиций;
- Оперативные сроки поставки под заказ (от 5 рабочих дней);
- Экспресс доставка в любую точку России;
- Техническая поддержка проекта, помощь в подборе аналогов, поставка прототипов;
- Система менеджмента качества сертифицирована по Международному стандарту ISO 9001;
- Лицензия ФСБ на осуществление работ с использованием сведений, составляющих государственную тайну;
- Поставка специализированных компонентов (Xilinx, Altera, Analog Devices, Intersil, Interpoint, Microsemi, Aeroflex, Peregrine, Syfer, Eurofarad, Texas Instrument, Miteq, Cobham, E2V, MA-COM, Hittite, Mini-Circuits,General Dynamics и др.);

Помимо этого, одним из направлений компании «ЭлектроПласт» является направление «Источники питания». Мы предлагаем Вам помощь Конструкторского отдела:

- Подбор оптимального решения, техническое обоснование при выборе компонента;
- Подбор аналогов;
- Консультации по применению компонента;
- Поставка образцов и прототипов;
- Техническая поддержка проекта;
- Защита от снятия компонента с производства.

Как с нами связаться

Телефон: 8 (812) 309 58 32 (многоканальный)
Факс: 8 (812) 320-02-42
Электронная почта: org@eplast1.ru
Адрес: 198099, г. Санкт-Петербург, ул. Калинина, дом 2, корпус 4, литера А.