Thick Film Resistor Networks, Single-In-Line, Conformal Coated SIP

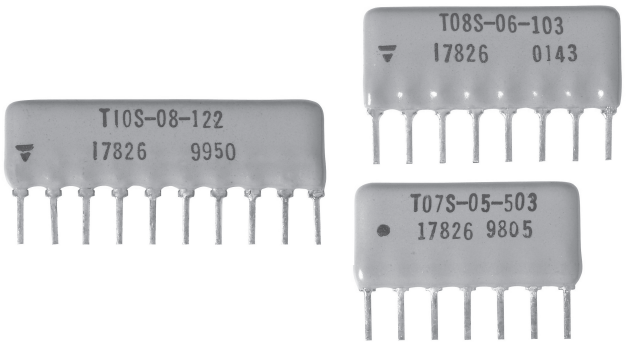

FEATURES

- 4 bit to 8 bit, R/2R ladder networks for D/A and A/D converter with bi-polar or CMOS switches
- Reduces total assembly costs
- Resistor element protected by tough epoxy conformal coating
- Thick film resistive elements
- Compliant to RoHS directive 2002/95/EC
- Halogen-free according to IEC 61249-2-21 definition

Pb Available

e1

RoHS* COMPLIANT

HALOGEN FREE

STANDARD ELECTRICAL SPECIFICATIONS

GLOBAL MODEL/ PIN NO.	BITS	POWER RATING ELEMENT $P_{70\,°C}$ W	STANDARD RESISTANCE VALUES (1) Ω	TOLERANCE ± %	TEMPERATURE COEFFICIENT (- 55 °C to + 125 °C) ± ppm/°C	LINEARITY (- 55 °C to 125 °C)
T06S	04	0.050	5K, 10K, 25K, 50K, 100K	2	100	± 0.5 LSB
T07S	05					
T08S	06					
T09S	07					
T10S	08					

Note
(1) Other values available on special order

GLOBAL PART NUMBER INFORMATION

New Global Part Numbering: T10S08100KRB (preferred part number format)

T	1	0	S	0	8	1	0	0	K	R	B

GLOBAL MODEL
- **T06S** = 6 pins
- **T07S** = 7 pins
- **T08S** = 8 pins
- **T09S** = 9 pins
- **T10S** = 10 pins

NUMBER OF BITS
- **04** = 4 bits (6 pins)
- **05** = 5 bits (7 pins)
- **06** = 6 bits (8 pins)
- **07** = 7 bits (9 pins)
- **08** = 8 bits (10 pins)

RESISTANCE VALUE [R]
- K = kΩ
- **5K00** = 5 kΩ
- **5K10** = 5.1 kΩ
- **100K** = 100 kΩ
- **Reference schematic**
- **if R = 5 kΩ, then 2R = 10 kΩ**
- **if R = 100 kΩ, then 2R = 200 kΩ**

TERMINAL FINISH
- **R** = Sn60/Pb40
- **C** = Sn95.5/Ag3.9/Cu0.6

PACKAGING
- **B** = Bulk

Historical Part Numbering: T10S08104 (will continue to be accepted)

T10S	08	104	
HISTORICAL MODEL	NUMBER OF BITS	RESISTANCE VALUE [R]	TERMINAL FINISH

* Pb containing terminations are not RoHS compliant, exemptions may apply

SCHEMATIC

n Bits:
n = 4 thru 8

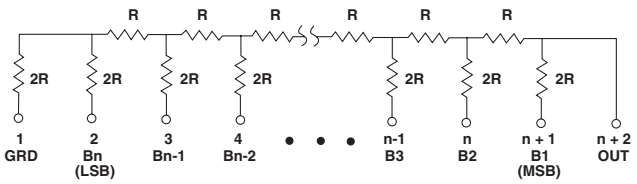

DIMENSIONS in inches (millimeters)

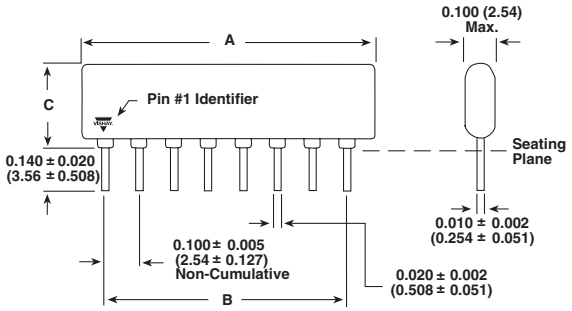

NUMBER OF PINS	A (Max.)	B ± 0.005 (0.127)	C (Max.)
6	0.590 (14.99)	0.500 (12.70)	0.350 (8.89)
7	0.690(17.53)	0.600 (15.24)	0.350 (8.89)
8	0.790 (20.07)	0.700 (17.78)	0.350 (8.89)
9	0.890 (22.61)	0.800 (20.32)	0.350 (8.89)
10	0.990 (25.15)	0.900 (22.86)	0.350 (8.89)

Disclaimer

ALL PRODUCT, PRODUCT SPECIFICATIONS AND DATA ARE SUBJECT TO CHANGE WITHOUT NOTICE TO IMPROVE RELIABILITY, FUNCTION OR DESIGN OR OTHERWISE.

Vishay Intertechnology, Inc., its affiliates, agents, and employees, and all persons acting on its or their behalf (collectively, "Vishay"), disclaim any and all liability for any errors, inaccuracies or incompleteness contained in any datasheet or in any other disclosure relating to any product.

Vishay makes no warranty, representation or guarantee regarding the suitability of the products for any particular purpose or the continuing production of any product. To the maximum extent permitted by applicable law, Vishay disclaims (i) any and all liability arising out of the application or use of any product, (ii) any and all liability, including without limitation special, consequential or incidental damages, and (iii) any and all implied warranties, including warranties of fitness for particular purpose, non-infringement and merchantability.

Statements regarding the suitability of products for certain types of applications are based on Vishay's knowledge of typical requirements that are often placed on Vishay products in generic applications. Such statements are not binding statements about the suitability of products for a particular application. It is the customer's responsibility to validate that a particular product with the properties described in the product specification is suitable for use in a particular application. Parameters provided in datasheets and/or specifications may vary in different applications and performance may vary over time. All operating parameters, including typical parameters, must be validated for each customer application by the customer's technical experts. Product specifications do not expand or otherwise modify Vishay's terms and conditions of purchase, including but not limited to the warranty expressed therein.

Except as expressly indicated in writing, Vishay products are not designed for use in medical, life-saving, or life-sustaining applications or for any other application in which the failure of the Vishay product could result in personal injury or death. Customers using or selling Vishay products not expressly indicated for use in such applications do so at their own risk. Please contact authorized Vishay personnel to obtain written terms and conditions regarding products designed for such applications.

No license, express or implied, by estoppel or otherwise, to any intellectual property rights is granted by this document or by any conduct of Vishay. Product names and markings noted herein may be trademarks of their respective owners.

Material Category Policy

Vishay Intertechnology, Inc. hereby certifies that all its products that are identified as RoHS-Compliant fulfill the definitions and restrictions defined under Directive 2011/65/EU of The European Parliament and of the Council of June 8, 2011 on the restriction of the use of certain hazardous substances in electrical and electronic equipment (EEE) - recast, unless otherwise specified as non-compliant.

Please note that some Vishay documentation may still make reference to RoHS Directive 2002/95/EC. We confirm that all the products identified as being compliant to Directive 2002/95/EC conform to Directive 2011/65/EU.

Vishay Intertechnology, Inc. hereby certifies that all its products that are identified as Halogen-Free follow Halogen-Free requirements as per JEDEC JS709A standards. Please note that some Vishay documentation may still make reference to the IEC 61249-2-21 definition. We confirm that all the products identified as being compliant to IEC 61249-2-21 conform to JEDEC JS709A standards.

Компания «ЭлектроПласт» предлагает заключение долгосрочных отношений при поставках импортных электронных компонентов на взаимовыгодных условиях!

Наши преимущества:

- Оперативные поставки широкого спектра электронных компонентов отечественного и импортного производства напрямую от производителей и с крупнейших мировых складов;
- Поставка более 17-ти миллионов наименований электронных компонентов;
- Поставка сложных, дефицитных, либо снятых с производства позиций;
- Оперативные сроки поставки под заказ (от 5 рабочих дней);
- Экспресс доставка в любую точку России;
- Техническая поддержка проекта, помощь в подборе аналогов, поставка прототипов;
- Система менеджмента качества сертифицирована по Международному стандарту ISO 9001;
- Лицензия ФСБ на осуществление работ с использованием сведений, составляющих государственную тайну;
- Поставка специализированных компонентов (Xilinx, Altera, Analog Devices, Intersil, Interpoint, Microsemi, Aeroflex, Peregrine, Syfer, Eurofarad, Texas Instrument, Miteq, Cobham, E2V, MA-COM, Hittite, Mini-Circuits,General Dynamics и др.);

Помимо этого, одним из направлений компании «ЭлектроПласт» является направление «Источники питания». Мы предлагаем Вам помощь Конструкторского отдела:

- Подбор оптимального решения, техническое обоснование при выборе компонента;
- Подбор аналогов;
- Консультации по применению компонента;
- Поставка образцов и прототипов;
- Техническая поддержка проекта;
- Защита от снятия компонента с производства.

Как с нами связаться

Телефон: 8 (812) 309 58 32 (многоканальный)
Факс: 8 (812) 320-02-42
Электронная почта: org@eplast1.ru
Адрес: 198099, г. Санкт-Петербург, ул. Калинина, дом 2, корпус 4, литера А.