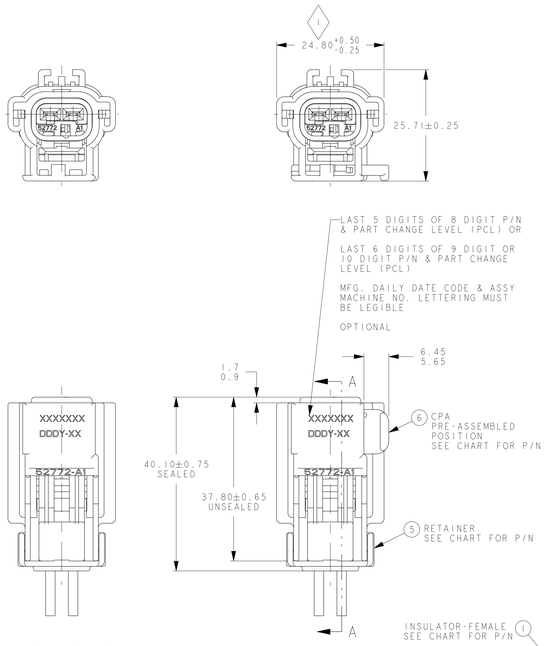


WITHOUT CPA

SEE P/N CHART
ALL DIMENSIONS SAME AS WITH CPA

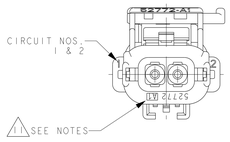


SEALED ASSEMBLY VIEWS

SEE P/N CHART
SHOWN WITH CPA'S

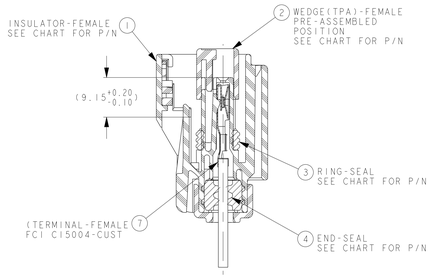


SECTION A-A

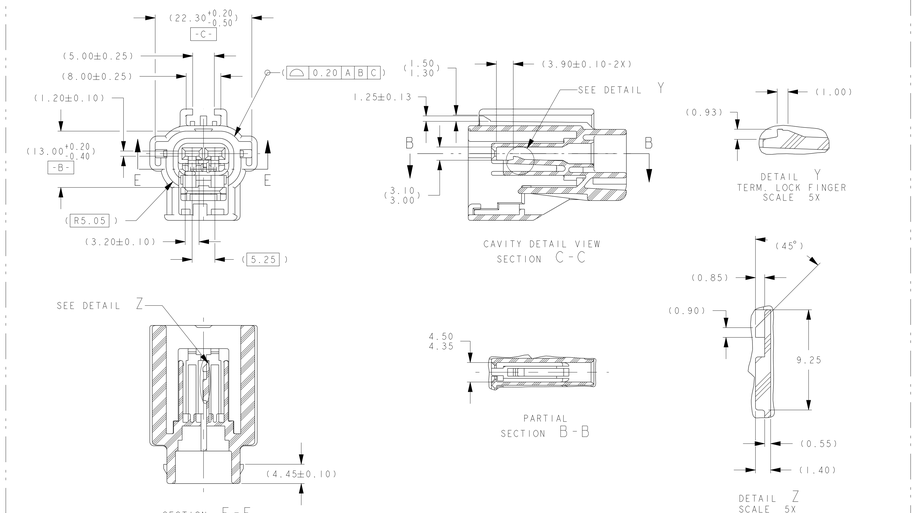


FOR REFERENCE ONLY
INSULATOR VIEWS

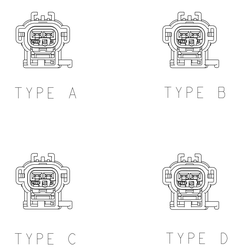


POLARIZATION OPTIONS
FULL SIZE
SHOWN W/CPA

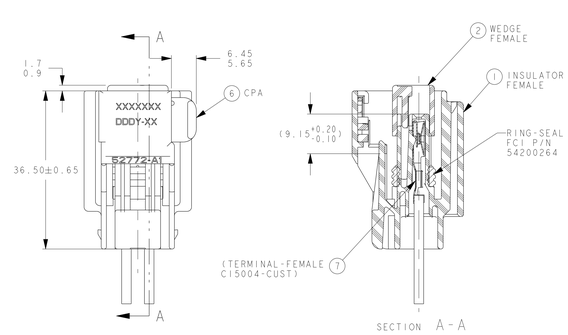


PARTIALLY SEALED ASSEMBLY VIEWS
SEE PART NUMBER CHART

NOTES:

1. QUALITY ASSURANCE REQUIREMENTS PER CHRYSLER PS-7300: 1 SPC DATA REQUIRED
2. ENGINEERING APPROVAL OF SUPPLIER SAMPLES IS REQUIRED PRIOR TO AUTHORIZATION OF PART PRODUCTION
3. CHANGES IN DESIGN COMPOSITION OR PROCESSING FROM THE PART PREVIOUSLY APPROVED FOR PART PRODUCTION REQUIRES PRIOR ENGINEERING APPROVAL
4. WIRING FABRICATORS MUST PURCHASE FROM SOURCES SHOWN
5. ALL THE SEALED CONNECTOR APPLICATIONS MUST BE USED WITH CHRYSLER WIRE SPEC. MS-8288, MS-9502 OR ISO 6722 EQUIVALENTS THIN WALL X-LINK ONLY.
   A- ASSEMBLIES WITH FCI P/N'S 54200239 OR 54200240 END SEALS MUST BE USED WITH 20 TO 14AWG OR ISO EQUIVALENTS WIRES WITH INSULATION Ø1.70 TO Ø2.77 O.D.
   B- ASSEMBLIES WITH FCI P/N'S 54200241 OR F480510 END SEALS MUST BE USED WITH 14 TO 10AWG OR ISO EQUIVALENTS WIRES WITH INSULATION Ø2.50 TO Ø4.09 O.D.
6. FCI P/N'S 54200238 RING SEAL, 54200240 AND F480510 END SEALS BAKED AT 450°F FOR 5 HOURS TO DRIVE OFF VOLITILES
7. ALL NON-SEALED APPLICATIONS MAY BE USED WITH ANY WIRE INSULATION 22 TO 10AWG OR ISO EQUIVALENTS (EXCEPT AS NOTED BELOW) PROVIDED THAT A TERMINAL GRIP FOR THAT CORE/INSULATION IS SHOWN ON C15004-CUST FEMALE TERMINAL DRAWING
   MAX. INSULATION CRIMP WIDTH = 4.50
   MAX. INSULATION CRIMP HEIGHT = 4.50
   MAX. INSULATION DIA = 4.09 (10 GA THIN WALL)
8. USE WITH FOLLOWING APPLICABLE COMPONENTS AS NEEDED:
   CAVITY PLUG FCI P/N 54200005.(CHRYSLER P/N 56038308)
   DOUBLE X-MAS TREE CLIP CHRYSLER P/N 04707091
   SINGLE X-MAS TREE CLIP CHRYSLER P/N 04625797
   2.80MM APEX FEMALE TERMINAL PER 15004-CUST SYMMETRICAL ABOUT CENTERLINE FOR 180° ORIENTATION
9. DIRECT CONNECT INTERFACE PER FCI G36002 (CHRYSLER 4707027)
10. TEST METHOD PER SAE/USCAR-2 REV 5, CONNECTOR ENGAGE & DISENGAGE WITH LATCH DEPRESSED FORCE NOT TO EXCEED 75N FOR THIS SYSTEM
    CPA SEATING FORCES - 40N MAX
    WEDGE SEATING FORCES - 100N MAX
    X-MAS TREE CLIP INSERTION FORCES - 75N MAX
11. FCI SUPPLIER CODE 52772, MOLD & CAVITY I.D. SIGNIFIES TOOL OWNERSHIP FOR REFERENCE
12. ANNUAL QUALITY REQUIREMENTS:
    IT IS PERMISSIBLE TO PERFORM CONTINUOUS CONFORMANCE PER FCI SPECIFICATION #AQA-001 INSTEAD OF ANNUAL LAYOUT & ANNUAL PV REQUIREMENTS OF QS-9000 SECTION 2 & SAE/USCAR-2
    ALL NON-REFERENCE DIMENSIONS ARE REQUIRED
    - USE INDEX A, BLACK SEALED AND UNSEALED FOR ALL AFFECTED INSULATOR CAVITIES
    - CURRENT PRODUCTION TOOLING
    - POINT OF LAST RUN
    SERVICE TOOLING GUIDE INFORMATION PER APEX TRAINING MANUAL
13. ** FCI P/N 54200259 NOT PRODUCED USE FCI P/N 55200200
14. MUST CONFORM TO THE FOLLOWING CHRYSLER/YNA STANDARDS:
    SAE/USCAR-2 REV 5 EXCEPT AS NOTED ABOVE
    PS-7300 QUALITY ASSURANCE (CHRYSLER)
    PS-4480-CEK-4 (CHRYSLER) PART I.D., (G-009-2 YNA)
    PS-9065 REGRIND (CHRYSLER), (G-009-3 YNA)
    PS-9227 DATA EXCHANGE (CHRYSLER), (G-009-7 YNA)
    PS-10052 INFORMATION SECURITY (CHRYSLER)
15. THIS DRAWING (H59000) REPLACES CHRYSLER DRAWING NUMBER 04687874 LEVEL "P" CHRYSLER DRAWING IS FOR REFERENCE ONLY
16. FCI P/N WITH SUFFIX "N" DESIGNATES ASSEMBLIES W/O CPA
17. MUST BE USED WITH FLUOROSILICONE END SEAL P/N 54200265, RETAINER P/N 54200234 & PROPER GAGE TEFLON WIRES FOR FLEX FUEL OR DIESEL FUEL APPLICATIONS. ASSEMBLE TERMINALS THROUGH RETAINER & ENDSEAL PRIOR TO ASSEMBLING INTO TERMINAL CAVITY

## MATING PART NUMBERS CHART

| INDEX TYPE | COLOR | SEALED/ UNSEALED | FCI | CUSTOMER | YNA | FCI | CUSTOMER | YNA |
|---|---|---|---|---|---|---|---|---|
| | | | FEMALE ASSEMBLY PART NUMBERS | | | MATING ASSEMBLY PART NUMBER FOR REFERENCE ONLY | | |
| D | NATURAL | UNSEALED | 54200203N | N/A | N/A | 55200209 | DIRECT CONNECT APPLICATION | N/A |
| | | UNSEALED | 54200203 | C 04687920 | 7283-5373 | 55200209 | DIRECT CONNECT APPLICATION | N/A |
| | TAN | SEALED | F970510 | N/A | N/A | F380510 | N/A | N/A |
| | | SEALED | 54200262 | N/A | N/A | 54200276 | DIRECT CONNECT APPLICATION | N/A |
| | NATURAL | SEALED | 54200209N | N/A | N/A | 55200205 | DIRECT CONNECT APPLICATION | N/A |
| | | SEALED | 54200209 | C 04687916 | 7283-5375 | 55200205 | DIRECT CONNECT APPLICATION | N/A |
| C | DK GREY | UNSEALED | 54200202N | N/A | N/A | 55200208 | DIRECT CONNECT APPLICATION | N/A |
| | | UNSEALED | 54200202 | C 04687919 | 7283-5372-10 | 55200208 | DIRECT CONNECT APPLICATION | N/A |
| | DK.BROWN | SEALED | F870510 | N/A | N/A | F280510 | N/A | N/A |
| | | SEALED | 54200261 | N/A | N/A | 54200275 | DIRECT CONNECT APPLICATION | N/A |
| | DK GREY | SEALED | 54200208N | N/A | N/A | 55200204 | DIRECT CONNECT APPLICATION | N/A |
| | | SEALED | 54200208 | C 04687914 | 7283-5374-10 | 55200204 | DIRECT CONNECT APPLICATION | N/A |
| B | LT GREY | UNSEALED | 54200201N | N/A | N/A | 54200205 | N/A | N/A |
| | | UNSEALED | 54200201 | C 04687918 | 7283-5371-40 | 54200205 | C 04687924 | N/A |
| | DK.BLUE | SEALED | F770510 | N/A | N/A | F180510 | N/A | N/A |
| | | SEALED | 54200260 | N/A | N/A | 54200274 | N/A | N/A |
| | LT GREY | SEALED | 54200207N | N/A | N/A | 54200211 | N/A | N/A |
| | | SEALED | 54200207 | C 04687913 | 7283-5359-40 | 54200211 | C 04687922 | N/A |
| A | LT GRN | UNSEALED | 54200251N | N/A | N/A | DIRECT CONNECT APPLICATION | | |
| | | UNSEALED | 54200251 | C 04868293AA | - | DIRECT CONNECT APPLICATION | | |
| | | SEALED | 54200212N | N/A | N/A | 54200233 | N/A | N/A |
| | | SEALED | 54200212 | C 04688917 | 7283-5367-60 | 54200233 | C 04868173AA | N/A |
| | BLACK | UNSEALED | 54200200N | N/A | N/A | 54200204 | N/A | N/A |
| | | UNSEALED | 54200200 | C 04688917 | 7283-5358-30 | 54200204 | C 04687923 | N/A |
| | | SEALED | 54200263 | N/A | N/A | DEVICE | N/A | N/A |
| | | SEALED | 54200206 | C 04687912 | 7283-5292-30 | 54200210 | C 04687921 | 7283-5292-30 |
| | | SEALED | 54200213N | N/A | N/A | 54200215 | N/A | N/A |
| | | SEALED | 54200213 | C 04793832 | - | 54200215 | C 04793833 | N/A |
| | | SEALED | 54200214N | C 56021913AA | 7283-6210-30 | DIRECT CONNECT APPLICATION | | |
| | DK GRN | SEALED | F670510 | N/A | N/A | F080510 | N/A | N/A |
| | | SEALED | 55200200 | - | 7283-8377-60 | 54200273 | N/A | N/A |
| | | SEALED | 55200200N | N/A | - | 54200273 | N/A | N/A |

CUSTOMER LEGENDS:
CHRYSLER: C
FORD: F
GENERAL MOTORS: GM
YAZAKI NA: Y

## CHART-ASSEMBLY PART NUMBERS

| CUSTOMER P/N'S | UNSEALED W/O CPA | UNSEALED W/O CPA | UNSEALED W/O CPA | UNSEALED W/O CPA | UNSEALED W/CPA | UNSEALED W/CPA | UNSEALED W/CPA | UNSEALED W/CPA | SEALED W/CPA | SEALED W/CPA | SEALED W/CPA | SEALED W/CPA | SEALED W/CPA | SEALED W/CPA | SEALED W/O CPA | SEALED W/O CPA | SEALED W/O CPA | SEALED W/O CPA | SEALED W/O CPA | SEALED W/O CPA |
|---|---|---|---|---|---|---|---|---|---|---|---|---|---|---|---|---|---|---|---|---|
| FCI P/N'S | 54200251N | 54200200N | 54200201N | 54200202N | 54200203N | 54200251 | 54200200 | 54200201 | 54200202 | 54200203 | 54200206 | 54200263 | 54200207 | 54200208 | 54200209 | 54200212 | 54200213 | 54200214N | 54200207N | 54200208N |
| | | | | | | C 04868293AA | Y 7283-5358-30 | Y 7283-5371-40 | Y 7283-5372-10 | Y 7283-5373 | Y 7283-5292-30 | N/A | Y 7283-5359-40 | Y 7283-5374-10 | Y 7283-5375 | Y 7283-5367-60 | — | Y 7283-6210-30 | | |
| | | | | | | | | | | | C 04687912 | N/A | C 04687913 | C 04687914 | C 04687916 | C 04688917 | C 04793832 | C 56021913AA | | |
| REQUIRED | | | | | | | REQUIRED | | | | | | | | | | | | | |
| FCI NO. | (CHRYSLER) | COLOR | ITEM | PART NAME (MATERIAL) | INDEX | FCI NO. | COLOR | TEMPERATURE CLASS 4 | | | | | | | | | | | | |
| | | | | | | | | CHART - ASSEMBLY PART NUMBERS SEALED | | | | | | | | | | | | |
| | | | | | | | | Y 7283-8377-30 | Y 7283-8377-60 | | | | | | | | | | | |
| | | | | | | | | ••54200259 | 55200200 | 55200200N | 54200260 | 54200261 | 54200262 | F670510 | F770510 | F870510 | F970510 | FCI P/N | | |
| | | | | | | | | | | | | | | | | | | CUSTOMER P/N | | |
| | | | | | | | | REQUIRED | | | | | | | | | | | | |
| 54200227 | 04687793 | BLACK | 1 | INSULATOR PA66GF | A | 54200255 | BLACK | I | | | | | | | | | | | | |
| 54200231 | •91012136 | LT GREEN | 1 | INSULATOR PA66GF | A | 55200201 | DK GREEN | | I | I | | | I | | | | | | | |
| 54200228 | 04687944 | LT GREY | 1 | INSULATOR PA66GF | B | 54200256 | DK BLUE | | | | I | | | I | | | | | | |
| 54200229 | 04687945 | DK GREY | 1 | INSULATOR PA66GF | C | 54200257 | DK BROWN | | | | | I | | | I | | | | | |
| 54200230 | 04687946 | NATURAL | 1 | INSULATOR PA66GF | D | 54200258 | TAN | | | | | | I | | | | I | | | |
| 54200225 | 04687976 | ROYAL BLUE | 2 | WEDGE PA66GF | | 54200281 | NATURAL | I | I | I | I | I | I | I | I | I | I | | | |
| 54200237 | 04687975 | RED | 3 | RING SEAL SILICONE | | | | | | | | | | | | | | | | |
| 54200264 | N/A | DK GREEN | 3 | RING SEAL FL.SILICONE | | | | | | | | | | | | | | | | |
| 54200238 | •91012137 | DK BLUE | 3 | RING SEAL SILICONE | | 54200238 | DK BLUE | I | I | I | I | I | I | I | I | I | I | SEE NOTE 6 | | |
| 54200239 | 04687942 | LT BLUE | 4 | END SEAL SILICONE | | | | | | | | | | | | | | | | |
| 54200240 | •91012138 | LT GREEN | 4 | END SEAL SILICONE | | 54200240 | LT GREEN | I | I | I | I | I | I | | | | | SEE NOTE 6 | | |
| 54200241 | 04687943 | BURNT ORANGE | 4 | END SEAL SILICONE | | F480510 | OFF WHITE | | | | | | | I | I | I | I | | | |
| 54200234 | 04687938 | BLACK | 5 | RETAINER PA66GF | | 54200271 | NATURAL | I | I | I | I | I | I | I | I | I | I | | | |
| 54200003 | 04687739 | RED | 6 | CPA LATCH PA66GF | | 54200008 | NATURAL | I | I | I | I | I | I | I | I | I | I | | | |
| 3 3 3 3 3 | 3 3 3 3 3 | 3 3 3 3 3 | 3 3 3 3 3 | CONNECTOR ASSEMBLY TEMPERATURE CLASS PER SAE/USCAR-2 REV 5 | | | | 4 4 4 4 4 | 4 4 4 4 4 | | | | | | | | | | | |
| S S S S S | S S S S S | S U S S S | S S S S S | PART CHANGE LEVEL (PCL) | | | | S S S T T | T W W W W | | | | | | | | | | | |

1 • INTERLOCK P/N

3 W/O CPA

| ECN-NO. | ZONE | CHANGE DESCRIPTION |
|---|---|---|
| 12-01346 | L8 | APPLICABLE WIRE NOTES REVISED FOR ISO 6722 EQUIVALENTS WIRE APPLICATION FOR 54200241 REVISED FROM 14 TO 10AWG |
| 12-01025 | E10 | CONNECTOR ASSEMBLIES P/N'S F670510 TO F970510 AND END SEAL P/N F480510 ADDED FOR TEMP CLASS 4 AND 10/12AWG APPLICATION, ASSEMBLY P/N CHARTS UPDATED & NOTES REVISED |
| 12-00661 | ALL | REVISED AND REDRAWN IN PDS SEE REV U1 FOR PREVIOUS CHANGES, NOTES AND ASSEMBLY P/N CHARTS UPDATED |

| | | | |
|---|---|---|---|
| PRODUCT SPEC. APEX 2.8 | PACKAGING SPEC. - | APPLICATION SPEC. - | This DRAWING AND ALL OTHER INFORMATION CONTAINED THEREIN IS PROPRIETARY AND THE PROPERTY OF FCI. This drawing may not be copied, reproduced or disclosed to any third party without the expressed written permission of FCI. (FCI April ©1999 |
| TOLERANCES: ±0.1 ±2° | MATERIAL: SEE CHART | SURFACE FINISH: - | 3RD ANGLE proj if mkg. |
| DRAWING # H59010, G36002 | COLOUR: SEE CHART | - | D.MENSION IN MILLIMETERS DWG SIZE A0 |
| DO NOT MEASURE DRAWING | TOOL NO. A-042 | ECO Loc. Code AN | |

| | DATE | NAME |
|---|---|---|
| CREATED BY | 2006-02-21 | D.TUCKNOLL |
| MODIFIED BY | 2012/07/18 | Sasha DAN |
| CHECKED BY | 2012/07/18 | Robert BAUMAN |
| APPROVED BY | 2012/07/18 | Jeff CAMPBELL |

TITLE: CHART - ASSEMBLY 2-WAY FEMALE WITH/CLIP SLOT

PRODUCT: 2.8 APEX CONNECTOR SYSTEM

DRAWING NUMBER: H59000 REV. X

STATE: SERIAL RELEASED

PART NUMBER: See Table REV. -

ESR NO. USA-WT234 EAT. NO. -

DOCUMENT UNDER PDS CONTROL NO MODIFICATION ALLOWED OUTSIDE

APPROVAL LEVEL: - SHEET 1 of 1 SCALE 2:1

FILE NAME H59000

CAD SYSTEM

CR EXE 1.0.7.29.796

Компания «ЭлектроПласт» предлагает заключение долгосрочных отношений при поставках импортных электронных компонентов на взаимовыгодных условиях!

Наши преимущества:

- Оперативные поставки широкого спектра электронных компонентов отечественного и импортного производства напрямую от производителей и с крупнейших мировых складов;
- Поставка более 17-ти миллионов наименований электронных компонентов;
- Поставка сложных, дефицитных, либо снятых с производства позиций;
- Оперативные сроки поставки под заказ (от 5 рабочих дней);
- Экспресс доставка в любую точку России;
- Техническая поддержка проекта, помощь в подборе аналогов, поставка прототипов;
- Система менеджмента качества сертифицирована по Международному стандарту ISO 9001;
- Лицензия ФСБ на осуществление работ с использованием сведений, составляющих государственную тайну;
- Поставка специализированных компонентов (Xilinx, Altera, Analog Devices, Intersil, Interpoint, Microsemi, Aeroflex, Peregrine, Syfer, Eurofarad, Texas Instrument, Miteq, Cobham, E2V, MA-COM, Hittite, Mini-Circuits,General Dynamics и др.);

Помимо этого, одним из направлений компании «ЭлектроПласт» является направление «Источники питания». Мы предлагаем Вам помощь Конструкторского отдела:

- Подбор оптимального решения, техническое обоснование при выборе компонента;
- Подбор аналогов;
- Консультации по применению компонента;
- Поставка образцов и прототипов;
- Техническая поддержка проекта;
- Защита от снятия компонента с производства.

**Как с нами связаться**

**Телефон:** 8 (812) 309 58 32 (многоканальный)
**Факс:** 8 (812) 320-02-42
**Электронная почта:** org@eplast1.ru
**Адрес:** 198099, г. Санкт-Петербург, ул. Калинина, дом 2, корпус 4, литера А.