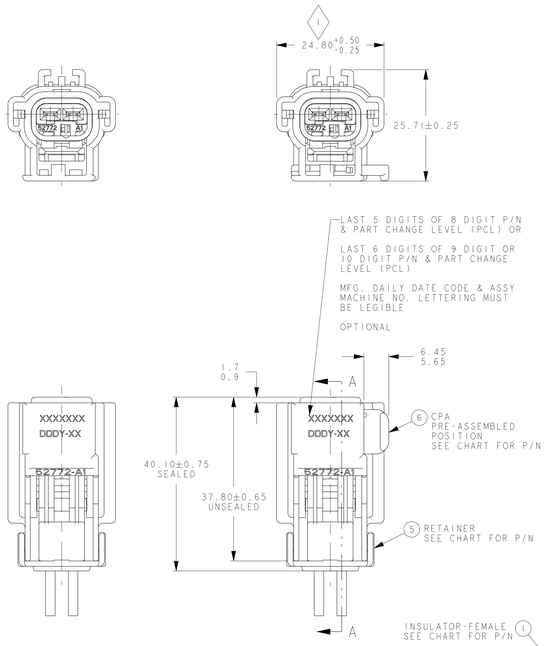

WITHOUT CPA

SEE P/N CHART
ALL DIMENSIONS SAME AS WITH CPA

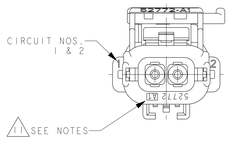

SEALED ASSEMBLY VIEWS

SEE P/N CHART
SHOWN WITH CPA'S

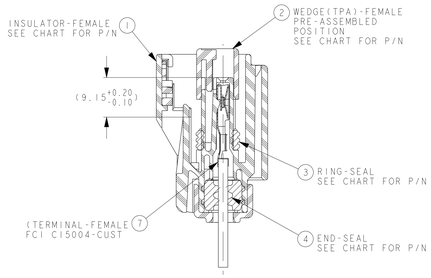

SECTION A-A

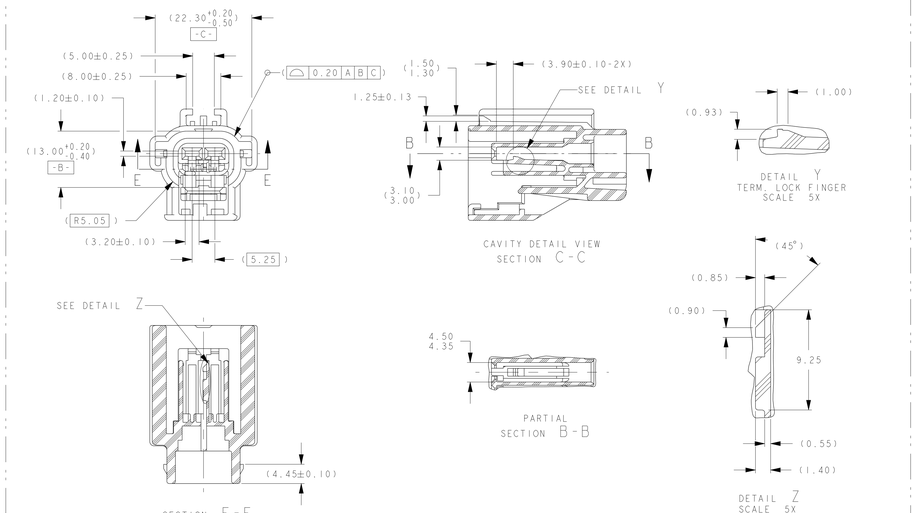

FOR REFERENCE ONLY
INSULATOR VIEWS

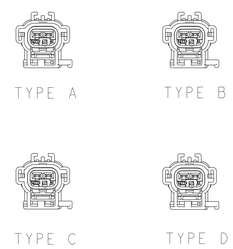

POLARIZATION OPTIONS
FULL SIZE
SHOWN W/CPA

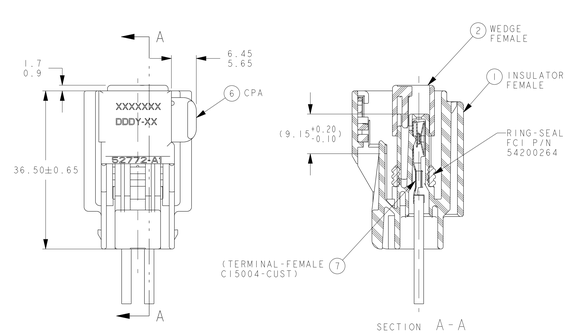

PARTIALLY SEALED ASSEMBLY VIEWS
SEE PART NUMBER CHART

NOTES:

1. QUALITY ASSURANCE REQUIREMENTS PER CHRYSLER PS-7300: 1 SPC DATA REQUIRED
2. ENGINEERING APPROVAL OF SUPPLIER SAMPLES IS REQUIRED PRIOR TO AUTHORIZATION OF PART PRODUCTION
3. CHANGES IN DESIGN COMPOSITION OR PROCESSING FROM THE PART PREVIOUSLY APPROVED FOR PART PRODUCTION REQUIRES PRIOR ENGINEERING APPROVAL
4. WIRING FABRICATORS MUST PURCHASE FROM SOURCES SHOWN
5. ALL THE SEALED CONNECTOR APPLICATIONS MUST BE USED WITH CHRYSLER WIRE SPEC. MS-8288, MS-9502 OR ISO 6722 EQUIVALENTS THIN WALL X-LINK ONLY.
   A- ASSEMBLIES WITH FCI P/N'S 54200239 OR 54200240 END SEALS MUST BE USED WITH 20 TO 14AWG OR ISO EQUIVALENTS WIRES WITH INSULATION Ø1.70 TO Ø2.77 O.D.
   B- ASSEMBLIES WITH FCI P/N'S 54200241 OR F480510 END SEALS MUST BE USED WITH 14 TO 10AWG OR ISO EQUIVALENTS WIRES WITH INSULATION Ø2.50 TO Ø4.09 O.D.
6. FCI P/N'S 54200238 RING SEAL, 54200240 AND F480510 END SEALS BAKED AT 450°F FOR 5 HOURS TO DRIVE OFF VOLITILES
7. ALL NON-SEALED APPLICATIONS MAY BE USED WITH ANY WIRE INSULATION 22 TO 10AWG OR ISO EQUIVALENTS (EXCEPT AS NOTED BELOW) PROVIDED THAT A TERMINAL GRIP FOR THAT CORE/INSULATION IS SHOWN ON C15004-CUST FEMALE TERMINAL DRAWING
   MAX. INSULATION CRIMP WIDTH = 4.50
   MAX. INSULATION CRIMP HEIGHT = 4.50
   MAX. INSULATION DIA = 4.09 (10 GA THIN WALL)
8. USE WITH FOLLOWING APPLICABLE COMPONENTS AS NEEDED:
   CAVITY PLUG FCI P/N 54200005.(CHRYSLER P/N 56038308)
   DOUBLE X-MAS TREE CLIP CHRYSLER P/N 04707091
   SINGLE X-MAS TREE CLIP CHRYSLER P/N 04625797
   2.80MM APEX FEMALE TERMINAL PER 15004-CUST SYMMETRICAL ABOUT CENTERLINE FOR 180° ORIENTATION
9. DIRECT CONNECT INTERFACE PER FCI G36002 (CHRYSLER 4707027)
10. TEST METHOD PER SAE/USCAR-2 REV 5, CONNECTOR ENGAGE & DISENGAGE WITH LATCH DEPRESSED FORCE NOT TO EXCEED 75N FOR THIS SYSTEM
    CPA SEATING FORCES - 40N MAX
    WEDGE SEATING FORCES - 100N MAX
    X-MAS TREE CLIP INSERTION FORCES - 75N MAX
11. FCI SUPPLIER CODE 52772, MOLD & CAVITY I.D. SIGNIFIES TOOL OWNERSHIP FOR REFERENCE
12. ANNUAL QUALITY REQUIREMENTS:
    IT IS PERMISSIBLE TO PERFORM CONTINUOUS CONFORMANCE PER FCI SPECIFICATION #AQA-001 INSTEAD OF ANNUAL LAYOUT & ANNUAL PV REQUIREMENTS OF QS-9000 SECTION 2 & SAE/USCAR-2
    ALL NON-REFERENCE DIMENSIONS ARE REQUIRED
    - USE INDEX A, BLACK SEALED AND UNSEALED FOR ALL AFFECTED INSULATOR CAVITIES
    - CURRENT PRODUCTION TOOLING
    - POINT OF LAST RUN
    SERVICE TOOLING GUIDE INFORMATION PER APEX TRAINING MANUAL
13. ** FCI P/N 54200259 NOT PRODUCED USE FCI P/N 55200200
14. MUST CONFORM TO THE FOLLOWING CHRYSLER/YNA STANDARDS:
    SAE/USCAR-2 REV 5 EXCEPT AS NOTED ABOVE
    PS-7300 QUALITY ASSURANCE (CHRYSLER)
    PS-4480-CEK-4 (CHRYSLER) PART I.D., (G-009-2 YNA)
    PS-9065 REGRIND (CHRYSLER), (G-009-3 YNA)
    PS-9227 DATA EXCHANGE (CHRYSLER), (G-009-7 YNA)
    PS-10052 INFORMATION SECURITY (CHRYSLER)
15. THIS DRAWING (H59000) REPLACES CHRYSLER DRAWING NUMBER 04687874 LEVEL "P" CHRYSLER DRAWING IS FOR REFERENCE ONLY
16. FCI P/N WITH SUFFIX "N" DESIGNATES ASSEMBLIES W/O CPA
17. MUST BE USED WITH FLUOROSILICONE END SEAL P/N 54200265, RETAINER P/N 54200234 & PROPER GAGE TEFLON WIRES FOR FLEX FUEL OR DIESEL FUEL APPLICATIONS. ASSEMBLE TERMINALS THROUGH RETAINER & ENDSEAL PRIOR TO ASSEMBLING INTO TERMINAL CAVITY

MATING PART NUMBERS CHART

INDEX TYPE	COLOR	SEALED/ UNSEALED	FCI	CUSTOMER	YNA	FCI	CUSTOMER	YNA
			FEMALE ASSEMBLY PART NUMBERS			MATING ASSEMBLY PART NUMBER FOR REFERENCE ONLY		
D	NATURAL	UNSEALED	54200203N	N/A	N/A	55200209	DIRECT CONNECT APPLICATION	N/A
		UNSEALED	54200203	C 04687920	7283-5373	55200209	DIRECT CONNECT APPLICATION	N/A
	TAN	SEALED	F970510	N/A	N/A	F380510	N/A	N/A
		SEALED	54200262	N/A	N/A	54200276	DIRECT CONNECT APPLICATION	N/A
	NATURAL	SEALED	54200209N	N/A	N/A	55200205	DIRECT CONNECT APPLICATION	N/A
		SEALED	54200209	C 04687916	7283-5375	55200205	DIRECT CONNECT APPLICATION	N/A
C	DK GREY	UNSEALED	54200202N	N/A	N/A	55200208	DIRECT CONNECT APPLICATION	N/A
		UNSEALED	54200202	C 04687919	7283-5372-10	55200208	DIRECT CONNECT APPLICATION	N/A
	DK.BROWN	SEALED	F870510	N/A	N/A	F280510	N/A	N/A
		SEALED	54200261	N/A	N/A	54200275	DIRECT CONNECT APPLICATION	N/A
	DK GREY	SEALED	54200208N	N/A	N/A	55200204	DIRECT CONNECT APPLICATION	N/A
		SEALED	54200208	C 04687914	7283-5374-10	55200204	DIRECT CONNECT APPLICATION	N/A
B	LT GREY	UNSEALED	54200201N	N/A	N/A	54200205	N/A	N/A
		UNSEALED	54200201	C 04687918	7283-5371-40	54200205	C 04687924	N/A
	DK.BLUE	SEALED	F770510	N/A	N/A	F180510	N/A	N/A
		SEALED	54200260	N/A	N/A	54200274	N/A	N/A
	LT GREY	SEALED	54200207N	N/A	N/A	54200211	N/A	N/A
		SEALED	54200207	C 04687913	7283-5359-40	54200211	C 04687922	N/A
A	LT GRN	UNSEALED	54200251N	N/A	N/A	DIRECT CONNECT APPLICATION		
		UNSEALED	54200251	C 04868293AA	-	DIRECT CONNECT APPLICATION		
		SEALED	54200212N	N/A	N/A	54200233	N/A	N/A
		SEALED	54200212	C 04688917	7283-5367-60	54200233	C 04868173AA	N/A
	BLACK	UNSEALED	54200200N	N/A	N/A	54200204	N/A	N/A
		UNSEALED	54200200	C 04688917	7283-5358-30	54200204	C 04687923	N/A
		SEALED	54200263	N/A	N/A	DEVICE	N/A	N/A
		SEALED	54200206	C 04687912	7283-5292-30	54200210	C 04687921	7283-5292-30
		SEALED	54200213N	N/A	N/A	54200215	N/A	N/A
		SEALED	54200213	C 04793832	-	54200215	C 04793833	N/A
		SEALED	54200214N	C 56021913AA	7283-6210-30	DIRECT CONNECT APPLICATION		
	DK GRN	SEALED	F670510	N/A	N/A	F080510	N/A	N/A
		SEALED	55200200	-	7283-8377-60	54200273	N/A	N/A
		SEALED	55200200N	N/A	-	54200273	N/A	N/A

CUSTOMER LEGENDS:
CHRYSLER: C
FORD: F
GENERAL MOTORS: GM
YAZAKI NA: Y

CHART-ASSEMBLY PART NUMBERS

CUSTOMER P/N'S	UNSEALED W/O CPA	UNSEALED W/O CPA	UNSEALED W/O CPA	UNSEALED W/O CPA	UNSEALED W/CPA	UNSEALED W/CPA	UNSEALED W/CPA	UNSEALED W/CPA	SEALED W/CPA	SEALED W/CPA	SEALED W/CPA	SEALED W/CPA	SEALED W/CPA	SEALED W/CPA	SEALED W/O CPA	SEALED W/O CPA	SEALED W/O CPA	SEALED W/O CPA	SEALED W/O CPA	SEALED W/O CPA
FCI P/N'S	54200251N	54200200N	54200201N	54200202N	54200203N	54200251	54200200	54200201	54200202	54200203	54200206	54200263	54200207	54200208	54200209	54200212	54200213	54200214N	54200207N	54200208N
						C 04868293AA	Y 7283-5358-30	Y 7283-5371-40	Y 7283-5372-10	Y 7283-5373	Y 7283-5292-30	N/A	Y 7283-5359-40	Y 7283-5374-10	Y 7283-5375	Y 7283-5367-60	—	Y 7283-6210-30		
											C 04687912	N/A	C 04687913	C 04687914	C 04687916	C 04688917	C 04793832	C 56021913AA		
REQUIRED							REQUIRED													
FCI NO.	(CHRYSLER)	COLOR	ITEM	PART NAME (MATERIAL)	INDEX	FCI NO.	COLOR	TEMPERATURE CLASS 4												
								CHART - ASSEMBLY PART NUMBERS SEALED												
								Y 7283-8377-30	Y 7283-8377-60											
								••54200259	55200200	55200200N	54200260	54200261	54200262	F670510	F770510	F870510	F970510	FCI P/N		
																		CUSTOMER P/N		
								REQUIRED												
54200227	04687793	BLACK	1	INSULATOR PA66GF	A	54200255	BLACK	I												
54200231	•91012136	LT GREEN	1	INSULATOR PA66GF	A	55200201	DK GREEN		I	I			I							
54200228	04687944	LT GREY	1	INSULATOR PA66GF	B	54200256	DK BLUE				I			I						
54200229	04687945	DK GREY	1	INSULATOR PA66GF	C	54200257	DK BROWN					I			I					
54200230	04687946	NATURAL	1	INSULATOR PA66GF	D	54200258	TAN						I				I			
54200225	04687976	ROYAL BLUE	2	WEDGE PA66GF		54200281	NATURAL	I	I	I	I	I	I	I	I	I	I			
54200237	04687975	RED	3	RING SEAL SILICONE																
54200264	N/A	DK GREEN	3	RING SEAL FL.SILICONE																
54200238	•91012137	DK BLUE	3	RING SEAL SILICONE		54200238	DK BLUE	I	I	I	I	I	I	I	I	I	I	SEE NOTE 6		
54200239	04687942	LT BLUE	4	END SEAL SILICONE																
54200240	•91012138	LT GREEN	4	END SEAL SILICONE		54200240	LT GREEN	I	I	I	I	I	I					SEE NOTE 6		
54200241	04687943	BURNT ORANGE	4	END SEAL SILICONE		F480510	OFF WHITE							I	I	I	I			
54200234	04687938	BLACK	5	RETAINER PA66GF		54200271	NATURAL	I	I	I	I	I	I	I	I	I	I			
54200003	04687739	RED	6	CPA LATCH PA66GF		54200008	NATURAL	I	I	I	I	I	I	I	I	I	I			
3 3 3 3 3	3 3 3 3 3	3 3 3 3 3	3 3 3 3 3	CONNECTOR ASSEMBLY TEMPERATURE CLASS PER SAE/USCAR-2 REV 5				4 4 4 4 4	4 4 4 4 4											
S S S S S	S S S S S	S U S S S	S S S S S	PART CHANGE LEVEL (PCL)				S S S T T	T W W W W											

1 • INTERLOCK P/N

3 W/O CPA

ECN-NO.	ZONE	CHANGE DESCRIPTION
12-01346	L8	APPLICABLE WIRE NOTES REVISED FOR ISO 6722 EQUIVALENTS WIRE APPLICATION FOR 54200241 REVISED FROM 14 TO 10AWG
12-01025	E10	CONNECTOR ASSEMBLIES P/N'S F670510 TO F970510 AND END SEAL P/N F480510 ADDED FOR TEMP CLASS 4 AND 10/12AWG APPLICATION, ASSEMBLY P/N CHARTS UPDATED & NOTES REVISED
12-00661	ALL	REVISED AND REDRAWN IN PDS SEE REV U1 FOR PREVIOUS CHANGES, NOTES AND ASSEMBLY P/N CHARTS UPDATED

PRODUCT SPEC. APEX 2.8	PACKAGING SPEC. -	APPLICATION SPEC. -	This DRAWING AND ALL OTHER INFORMATION CONTAINED THEREIN IS PROPRIETARY AND THE PROPERTY OF FCI. This drawing may not be copied, reproduced or disclosed to any third party without the expressed written permission of FCI. (FCI April ©1999
TOLERANCES: ±0.1 ±2°	MATERIAL: SEE CHART	SURFACE FINISH: -	3RD ANGLE proj if mkg.
DRAWING # H59010, G36002	COLOUR: SEE CHART	-	D.MENSION IN MILLIMETERS DWG SIZE A0
DO NOT MEASURE DRAWING	TOOL NO. A-042	ECO Loc. Code AN	

	DATE	NAME
CREATED BY	2006-02-21	D.TUCKNOLL
MODIFIED BY	2012/07/18	Sasha DAN
CHECKED BY	2012/07/18	Robert BAUMAN
APPROVED BY	2012/07/18	Jeff CAMPBELL

TITLE: CHART - ASSEMBLY 2-WAY FEMALE WITH/CLIP SLOT

PRODUCT: 2.8 APEX CONNECTOR SYSTEM

DRAWING NUMBER: H59000 REV. X

STATE: SERIAL RELEASED

PART NUMBER: See Table REV. -

ESR NO. USA-WT234 EAT. NO. -

DOCUMENT UNDER PDS CONTROL NO MODIFICATION ALLOWED OUTSIDE

APPROVAL LEVEL: - SHEET 1 of 1 SCALE 2:1

FILE NAME H59000

CAD SYSTEM

CR EXE 1.0.7.29.796

Компания «ЭлектроПласт» предлагает заключение долгосрочных отношений при поставках импортных электронных компонентов на взаимовыгодных условиях!

Наши преимущества:

- Оперативные поставки широкого спектра электронных компонентов отечественного и импортного производства напрямую от производителей и с крупнейших мировых складов;
- Поставка более 17-ти миллионов наименований электронных компонентов;
- Поставка сложных, дефицитных, либо снятых с производства позиций;
- Оперативные сроки поставки под заказ (от 5 рабочих дней);
- Экспресс доставка в любую точку России;
- Техническая поддержка проекта, помощь в подборе аналогов, поставка прототипов;
- Система менеджмента качества сертифицирована по Международному стандарту ISO 9001;
- Лицензия ФСБ на осуществление работ с использованием сведений, составляющих государственную тайну;
- Поставка специализированных компонентов (Xilinx, Altera, Analog Devices, Intersil, Interpoint, Microsemi, Aeroflex, Peregrine, Syfer, Eurofarad, Texas Instrument, Miteq, Cobham, E2V, MA-COM, Hittite, Mini-Circuits,General Dynamics и др.);

Помимо этого, одним из направлений компании «ЭлектроПласт» является направление «Источники питания». Мы предлагаем Вам помощь Конструкторского отдела:

- Подбор оптимального решения, техническое обоснование при выборе компонента;
- Подбор аналогов;
- Консультации по применению компонента;
- Поставка образцов и прототипов;
- Техническая поддержка проекта;
- Защита от снятия компонента с производства.

Как с нами связаться

Телефон: 8 (812) 309 58 32 (многоканальный)
Факс: 8 (812) 320-02-42
Электронная почта: org@eplast1.ru
Адрес: 198099, г. Санкт-Петербург, ул. Калинина, дом 2, корпус 4, литера А.