Two-phase Unipolar DC Brushless Motor Pre-Driver IC

■ GENERAL DESCRIPTION

The NJM2646 is a 2-phase DC brushless motor pre-driver IC with a totem-pole pre-driver for external power MOS-FET driving. It has useful functions of Lock Detect and Auto Protection circuit, which improve safety in motor locking. The turn-on/turn-off ratio in the auto-recovery period is set in 1:10. The NJM2644 is available in surface mount packages, an 8-lead DMP, SOP and thin type MSOP (TVSP), which provides downsizing in the 12V fan motor applications. And it is pin compatible with the NJM2640, 48V pre-driver.

■ PACKAGE OUTLINE

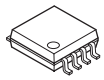

NJM2646M
(DMP8)

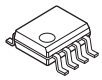

NJM2646E
(SOP8)

NJM2646RB1
(MSOP8(TVSP8))

■ FEATURES

- Operating Voltage V_{DD}=4 to 15V
- Absolute Maximum Voltage 30V
- Internal Lock Detect / Auto Protection Release Circuit
- Internal Hall Amp with Hysterisis
- Lock Alarm Output Terminal
- Package Outline DMP8, SOP8 JEDEC 150mil
  MSOP8(TVSP8)*

*MEET JEDEC MO-187-DA / THIN TYPE

■ BLOCK DIAGRLAM

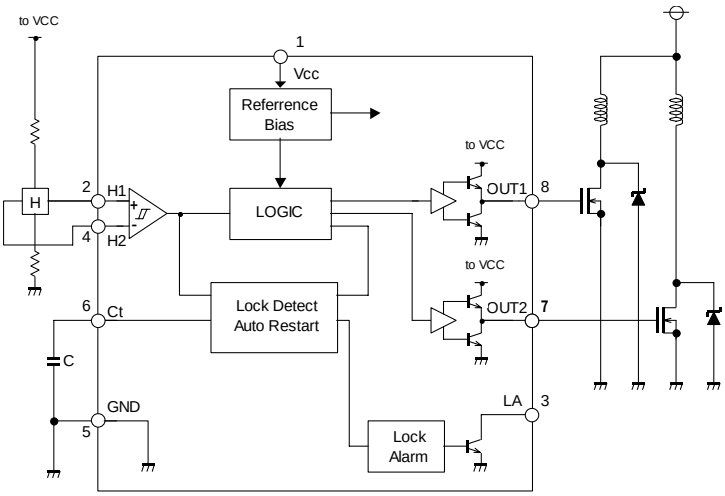

■ PIN FUNCTION

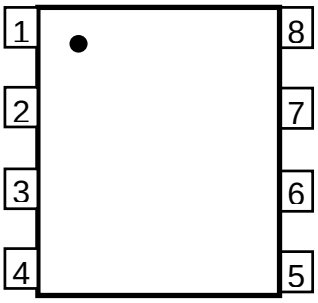

1: Vcc
2: H1
3: LA
4: H2
5: GND
6: Ct
7: OUT1
8: OUT2

■ ABSOLUTE MAXIMUM RATINGS

(Ta=25°C)

PARAMETER	SYMBOL	RATINGS	UNIT	NOTE
Supply Voltage	V_{cc}	30	V	-
Hall Input Voltage Range	V_{IH}	-0.3 to V_{CC}	V	-
Output Current (Peak)	I_{OUT}	70	mA	-
Lock Alarm Output Voltage	V_{OLA}	30	V	-
Hall Input Differential Voltage	V_{IHD}	2	V	-
Lock Alarm Output Current	I_{OLA}	20	V	-
Operating Temperature Range	Topr	-40 to 85	°C	-
Operating Junction Temperature Range	Toj	-40 to 150	°C	-
Storage Temperature Range	Tstg	-50 to 150	°C	-
Power Dissipation	P_D	300 (DMP8) 300 (SOP8) 400 (MSOP8(TVSP8))	mW	Device itself

■ RECOMMENDED OPERATING CONDITIONS

(Ta=25°C)

PARAMETER	SYMBOL	RATINGS	UNIT (unit)	NOTE
Supply Voltage	V_{cc}	4 to 15	V	-
Hall Input Voltage Common Mode Voltage	V_{ICM}	1.5 to Vcc-2	V	-
Junction Temperature	Tj	-40 to 125	°C	-

■ **ELECTRICAL CHARACTERISTICS** (V_{DD} =12V, Ta=25°C)

PARAMETER	SYMBOL	CONDITION	MIN.	TYP.	MAX.	UNIT
Operating Current	Icc	-	-	7.7	10.5	mA
Hall Input Hysterisis Range	V_{HYS}	-	8	20	-	mV
Hall Amplifier Input Bias Current	I_B	-	-	0.5	-	µA
High Side Output Voltage	V_{OH}	I_{OUT}=20mA	10.0	10.3	-	V
Low Side Output Voltage	V_{OL}	I_{OUT}=20mA	-	0.5	0.8	V
Output Clamp Voltage	V_{CLM}	V_{CC}=28V	-	15	-	V
Lock Alarm Output Voltage	V_{LA}	Lock Alarm ON,I_{LA}=5mA	-	-	0.5	V
Lock Alarm Leak Current	$I_{LA\text{-}LEAK}$	V_{LA}=15V	-	1	3	µA
Ct Charge Current	I_C	V_{Ct}=1.5V	-	4.0	5.5	µA
Ct Discharge Current	I_{DC}	V_{Ct}=1.5V	-	0.4	0.6	µA
Charge / Discharge Current Ratio	I_C / I_{DC}	-	-	12	-	
Ct H-level Cense Voltage	V_{CH}		2.2	2.5	2.8	V
Ct L-level Cense Voltage	V_{CL}	-	0.85	0.95	1.05	V
Auto Protection Release ON Time	T_{ON}	Ct=0.47µF	-	0.23	-	s
Auto Protection Release ON Time	T_{OFF}	Ct=0.47µF	-	2.8	-	s

■ TYPICAL CHARACTERISTICS

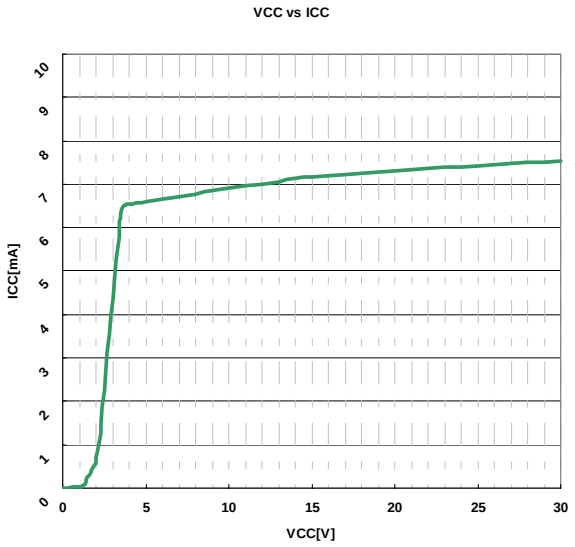

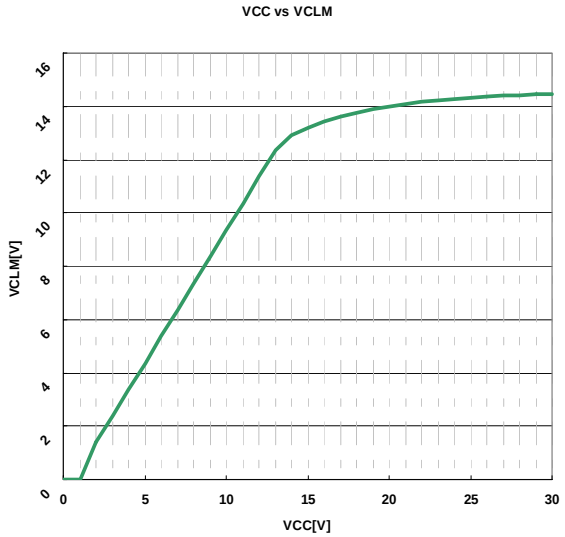

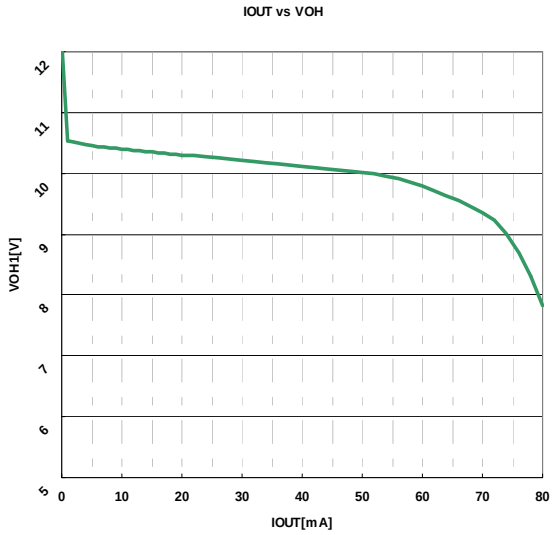

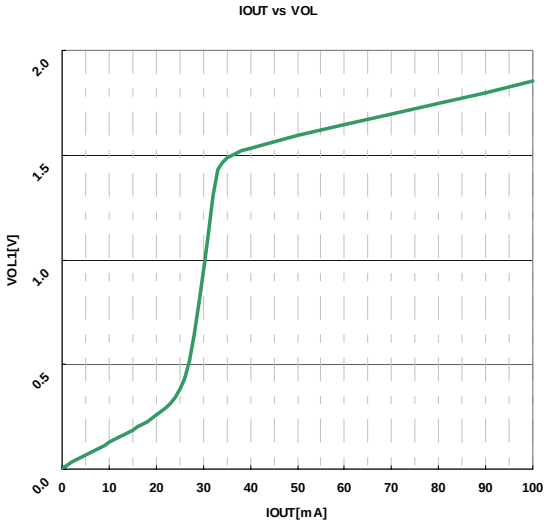

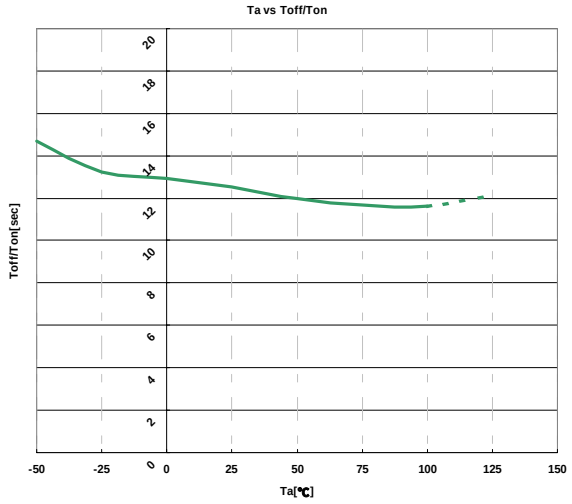

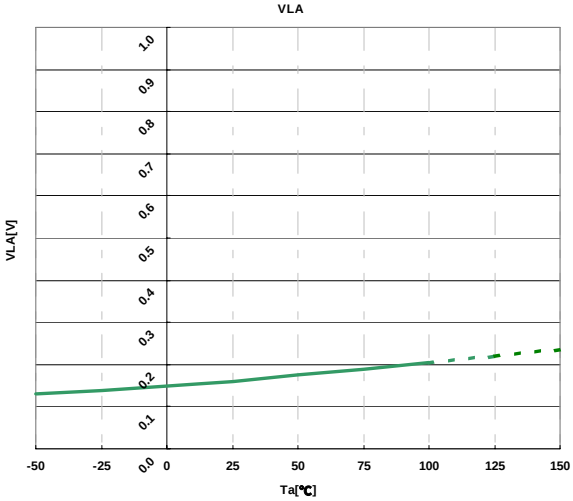

■ APPLICATION NOTE

The NJM2646 is a two-phase motor unipolar pre-driver IC for FET drive. It is suitable for fan motor drivers for communication equipment where 12V operation is required.

[Application Circuit Example]

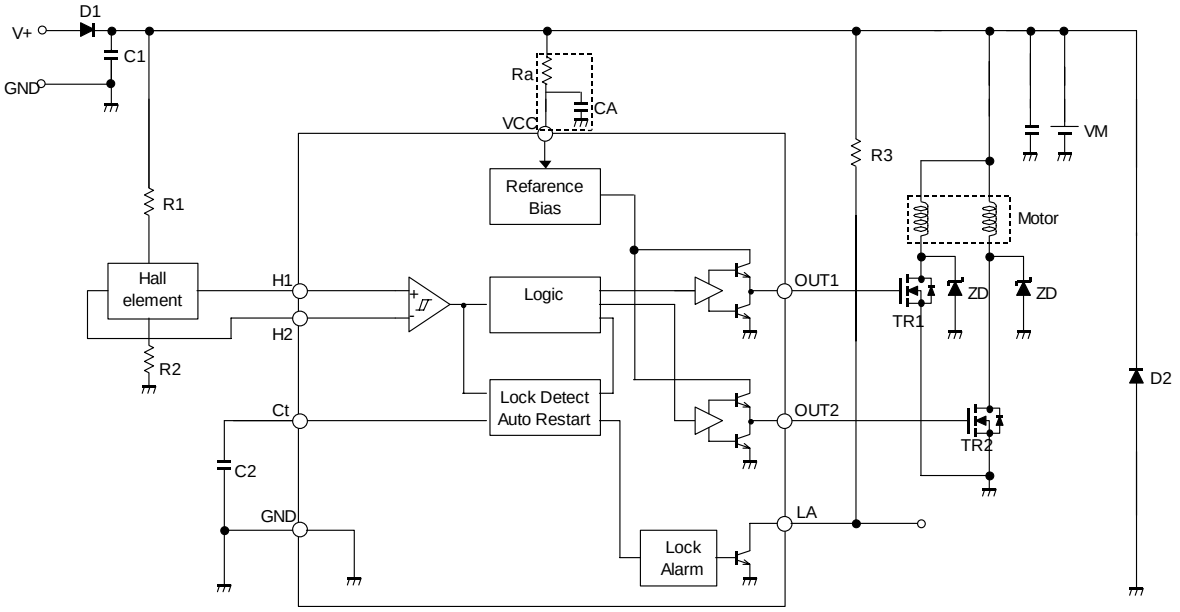

[Design Notes]

Above application example is designed for 12V operation. It uses the following components:

Hall Elements: HW101A (AKE)
TR1,TR2: 2SK3022 (Panasonic)

1. Selection of C1 and D1:
   C1 is used for a noise reduction purpose. A typical value is 0.1uF.
   Optimize the value in actual operating conditions if necessary. D1 is a diode for protection against reverse voltage supply. Silicon rectifier diode (WO3C, 10D1 and equivalent) is appropriate.

2. Lock Protection Function (Design of C2 value):
   Lock Protection Function, consists of Motor Lock Detection and Auto Resume Function, is a safety feature to protect a motor and a driver circuit from fatal destruction in case of motor halt.
   Motor Lock Detection detects motor halt due to irregular load conditions and then cuts motor driving current f or safety operation. When Lock Detection is activated; Lock Alert Out (LA: Pin 3) goes to L.

   A value of C2 determines Lock detection time (Ton) and Auto Resume Time (Toff).

   Lock detection time (Ton) is given by:

$$T_{ON} = C2\frac{Vch - Vcl}{Ic}[\sec]$$

   Where C2 is 0.47uF:

$$T_{ON} = 0.47 \times 10^{-6} \times \frac{2.5 - 0.95}{4.0 \times 10^{-6}} = 0.18[\sec]$$

   Auto Resume Time (Toff) is given by:

$$T_{OFF} = C2\frac{Vch - Vcl}{Idc}[\sec]$$

Where C2 is 0.47uF:

$$T_{OFF} = 0.47 \times 10^{-6} \times \frac{2.5 - 0.95}{0.4 \times 10^{-6}} = 1.82[\sec]$$

In actual application, Lock detection time (Ton) is affected by the mechanical time constant of a motor. Therefore, constant start up must be confirmed in actual evaluation taking operating variations (i.e. Temperature, Voltage change and so on) in consideration.

A typical value of C2 is either 0.47uF or 1uF depending on a motor.

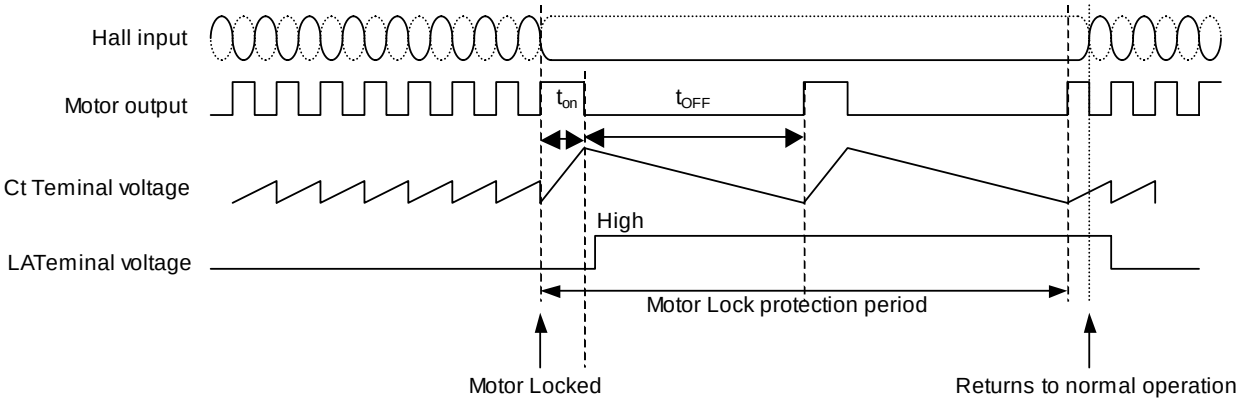

Lock Protection

Lock Alert Out (LA: Pin 3) is a open collector output and R3 is a pull up resister. A typical value of R3 is 10kΩ.

It must be noted that Lock Alert Out stays a H state during few hundred milliseconds from power up as shown in the picture below.

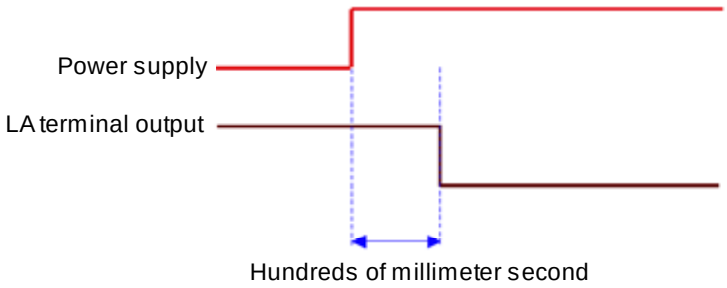

3.Design of hall element bias resistance (**R1 and R2**)

Hall amplifier is a differential amplifier with hysteresis characteristics (24mV typical).
The common-mode input voltage is between 1.5V and Vcc-2V and the input signal must be within the range.
Non-excitation hall bias voltage is to be set at a half of VCC for effective use of common-mode input voltage range.
Therefore the same value of hall bias resistors is selected for R1 and R2.
Given that the bias current is set to be 5mA by HW101A datasheet, R1 and R2 can be determined as follows:

$$R1 + R2 = \frac{Vcc}{Ihbias} = \frac{12}{5 \times 10^{-3}} = 2.4k\Omega$$

$$R1 = R2 = 1.2k\Omega$$

The output voltage of hall elements is influenced by the bias current and magnetic flux density of hall elements.
The optimum input voltage of the NJM2646 is 100mVp-p and higher. With such input voltage, the highest efficiency can be obtained.

4. Design of spike killer for power transistor (**ZD1 and ZD2**)

Zenner diodes (often referred as spike killer) are used for limiting kick back voltage of motor winding generated when power transistors is (TR1 and TR2) turned off from on.
There are two methodologies to consume kick back voltage:

1) **By insertion of ZD1** (zenner diode connected between Base and Emitter of TR1)
Energy of kick back voltage is consumed by TR1(or TR2). When ZD1 is in operation, Collector voltage is sum of Vbe and ZD1. Therefore, breakdown voltage of ZD1 must be lower than that of TR1.

2) **By insertion of ZD2** (zenner diode connected between Collector and Emitter of TR1)
Energy of kick back voltage is consumed by ZD2. To protect TR1, breakdown voltage of ZD2 must be lower than that of TR1.
This method is generally used when Energy of kick back voltage is large. In such application, power rating of ZD must take in consideration.

5. VCC input (Design of **Ra and Ca**)

Ra and Ca must be used if VCC exceeds operating voltage range of NJM2646.

Example) VCC 30V Application

Given that current consumption of NJM2646 is 10.5mA (at VCC=12V), Ra is given by:

$$Ra = \frac{30 - 12}{10.5 \times 10^{-3}} = 1.71k\Omega$$

Ca is used if NJM2646 is oscillated or shows unstable operation. A typical value Ca is from 0.01μF to 0.1μF. A ceramic type is recommended and it must be place near VCC and Gnd.

Inserting Ra and Ca also improves ESD immunity.

7. Protection from active power on and off (**D2**)

If an application requires active power on and off, TR1 (TR2) may be damaged or resulted in destruction.
In such application, adding diode between motor winding and Gnd will reduce the damage.

The specifications on this data book are only given for information, without any guarantee as regards either mistakes or omissions. The application circuit in this data book are described only to show representative usages of the product and not intended for the guarantee or permission of any right including the industrial rights.

Mouser Electronics

Authorized Distributor

Click to View Pricing, Inventory, Delivery & Lifecycle Information:

NJR:

NJM2646R-TE1 NJM2646RB1-TE1 NJM2646E NJM2646M-TE1 NJM2646E-TE1

Компания «ЭлектроПласт» предлагает заключение долгосрочных отношений при поставках импортных электронных компонентов на взаимовыгодных условиях!

Наши преимущества:

- Оперативные поставки широкого спектра электронных компонентов отечественного и импортного производства напрямую от производителей и с крупнейших мировых складов;
- Поставка более 17-ти миллионов наименований электронных компонентов;
- Поставка сложных, дефицитных, либо снятых с производства позиций;
- Оперативные сроки поставки под заказ (от 5 рабочих дней);
- Экспресс доставка в любую точку России;
- Техническая поддержка проекта, помощь в подборе аналогов, поставка прототипов;
- Система менеджмента качества сертифицирована по Международному стандарту ISO 9001;
- Лицензия ФСБ на осуществление работ с использованием сведений, составляющих государственную тайну;
- Поставка специализированных компонентов (Xilinx, Altera, Analog Devices, Intersil, Interpoint, Microsemi, Aeroflex, Peregrine, Syfer, Eurofarad, Texas Instrument, Miteq, Cobham, E2V, MA-COM, Hittite, Mini-Circuits,General Dynamics и др.);

Помимо этого, одним из направлений компании «ЭлектроПласт» является направление «Источники питания». Мы предлагаем Вам помощь Конструкторского отдела:

- Подбор оптимального решения, техническое обоснование при выборе компонента;
- Подбор аналогов;
- Консультации по применению компонента;
- Поставка образцов и прототипов;
- Техническая поддержка проекта;
- Защита от снятия компонента с производства.

Как с нами связаться

Телефон: 8 (812) 309 58 32 (многоканальный)
Факс: 8 (812) 320-02-42
Электронная почта: org@eplast1.ru
Адрес: 198099, г. Санкт-Петербург, ул. Калинина, дом 2, корпус 4, литера А.