| PRODUCT NUMBER | PLATING PERFORMANCE LEVEL | APPLICATION | SHROUD FOR REAR PLUG UP APPLICATIONS |
|---|---|---|---|
| 63743-1YYY | TELCORDIA CO | STANDARD | 84818-102 |
| 63743-1YYYLF | | LEAD FREE | 84818-102LF |
| 63743-5YYY | TELCORDIA UE | STANDARD | 84818-502 |
| 63743-5YYYLF | | LEAD FREE | 84818-502LF |
| 63743-9YYY | TELCORDIA CO | STANDARD | 84818-102 |
| 63743-9YYYLF | | LEAD FREE | 84818-102LF |

EYE OF NEEDLE
PRESS FIT SECTION

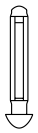

BABY-H
PRESS FIT SECTION

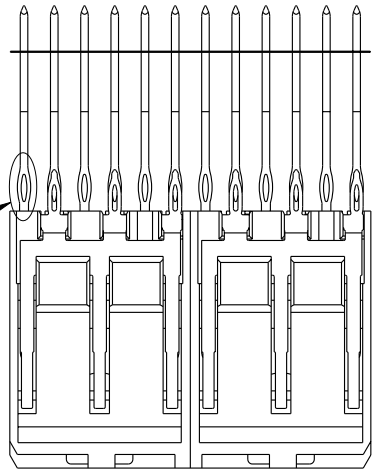


DETAIL A
SCALE 4:1
SEE NOTE 18

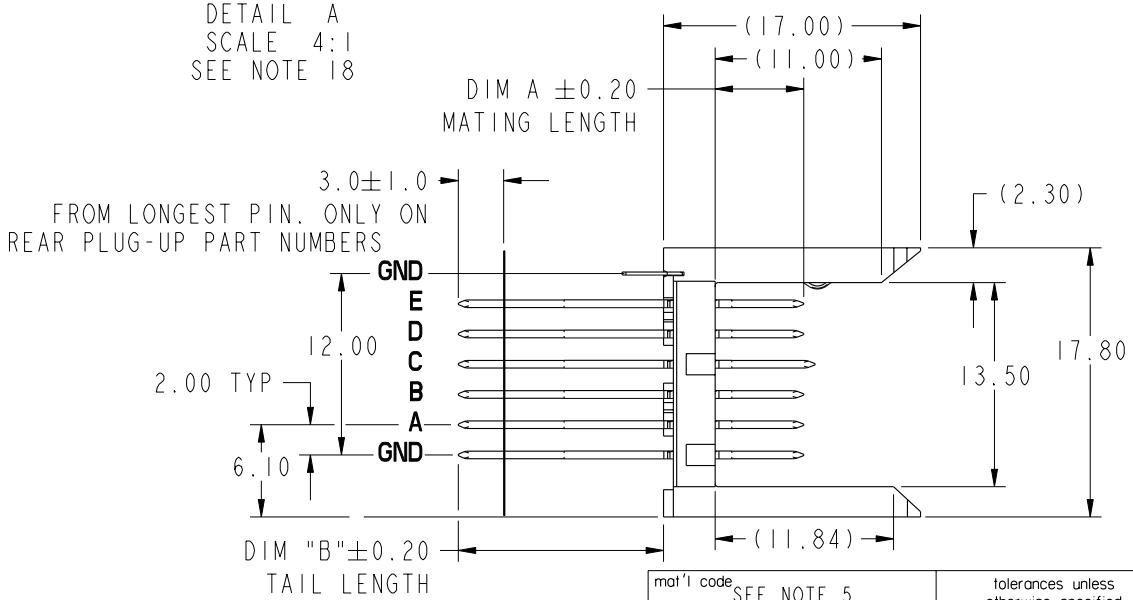


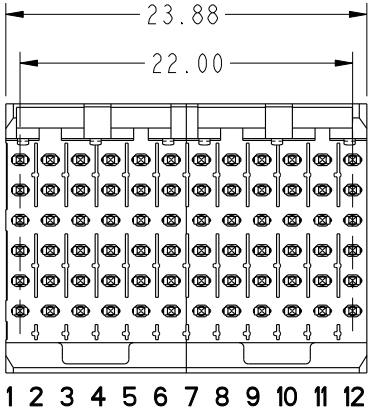


| mat'l code | SEE NOTE 5 | | | | | | |
|---|---|---|---|---|---|---|---|
| ltr | ecn no. | dr | date | | | | |
| P | V06-0498 | DCH | 2006-06-05 | | | | |
| R | V06-0779 | DAI | 2006-08-11 | | | | |
| S | V07-0182 | DCH | 2007-04-20 | | | | |
| T | V07-0733 | HTB | 2008-01-02 | dr | K. BELL | 2000-03-15 | |
| U | V08-0049 | LP | 2008-2-4 | engr | M. HAHN | 2000-03-15 | |
| - | - | - | - | chr | M. HAHN | 2000-03-15 | |
| N | V05-0533 | TAB | 2005-06-01 | appd | M. HAHN | 2000-03-15 | |
| sheet index | revision | | U | U | U | U | U |
| | sheet | | 1 | 2 | 3 | 4 | 5 | 6 |

tolerances unless otherwise specified

| | |
|---|---|
| | 0.X ±0.3 |
| linear | 0.XX ±0.13 |
| | .XXX ±.051 |
| angles | 0° ±2° |

CUSTOMER COPY

projection

MM

scale 1:1

www.fciconnect.com

title VERTICAL SIGNAL HDR 5 ROW P.F. 60 POS. SELECT LOAD STD.

product family METRAL 1000

code 213

size A

dwg no 63743

sheet 1 of 6

cage code 22526

Pro/E

REV E - 2006-04-18

This document is the property of and embodies CONFIDENTIAL and PROPRIETARY information of FCI. No part of the information shown on this document may be used in any way or disclosed to others without the written consent of FCI. Copyright FCI.

PDM: Rev:U STATUS: Released Printed: May 13, 2011

| PRODUCT NUMBER |
|---|
| SEE SHEET 1 |

| PRESS-FIT HOLES | OPTION 1 | OPTION 2 |
|---|---|---|
| HOLE DIAMETER AFTER PLATING | 0.65-0.77 | 0.65-0.80 |
| DRILLED HOLE | 0.78-0.83 | 0.81-0.86 (0.85 DRILL) |
| COPPER PLATING | 0.025-0.050 | 0.025 MIN |
| SnPb PLATING | 0.005-0.015 | 0.005-0.015 |

SEE PRINT 58351 FOR ADDITIONAL PCB INFO.

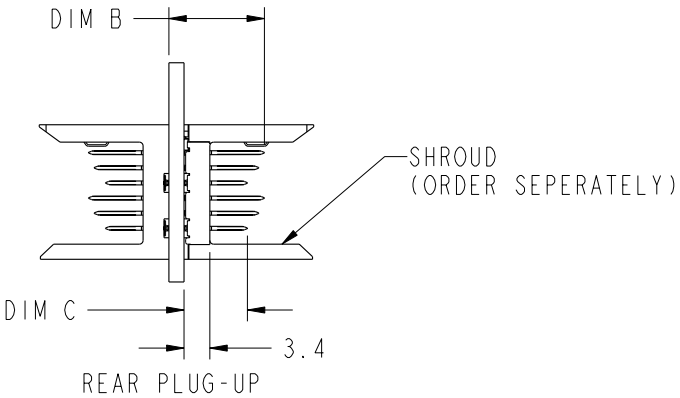


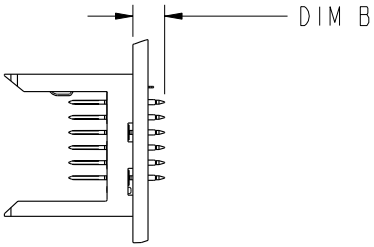


STUB MOUNT

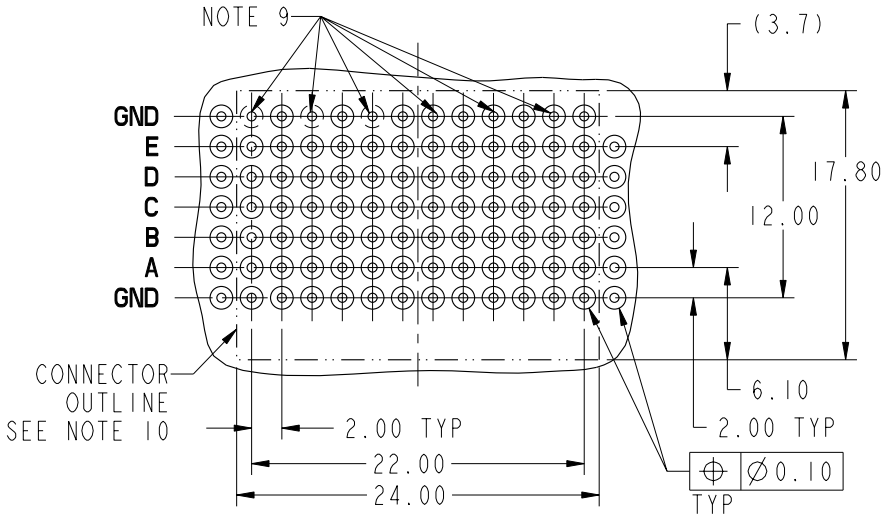


**RECOMMENDED PCB HOLE PATTERN (COMPONENT SIDE)**

| mat'l code SEE NOTE 5 | | | | tolerances unless otherwise specified | | | CUSTOMER COPY | FCI www.fciconnect.com | |
|---|---|---|---|---|---|---|---|---|---|
| ltr | ecn no. | dr | date | linear | 0.X ±0.3 | | projection | title VERTICAL SIGNAL HDR 5 ROW P.F. 60 POS. SELECT LOAD STD. | |
| U | | | | | 0.XX ±0.13 | | | | |
| | | | | | .XXX ±.051 | | | | |
| | | | | angles | 0° ±2° | | | | |
| | | | | dr | K. BELL | 2000-03-15 | MM | product family METRAL 1000 | code 213 |
| | | | | engr | M. HAHN | 2000-03-15 | | size A / dwg no 63743 | |
| | | | | chr | M. HAHN | 2000-03-15 | scale 1:1 | | sheet 2 |
| | | | | appd | M. HAHN | 2000-03-15 | | | |
| sheet index | revision sheet | | | | | | | | |

cage code 22526

Pro/E

This document is the property of and embodies CONFIDENTIAL and PROPRIETARY information of FCI. No part of the information shown on this document may be used in any way or disclosed to others without the written consent of FCI. Copyright FCI.

REV E - 2006-04-18

PDM: Rev:U STATUS: Released Printed: May 13, 2011

| PIN CODE NO. | DIM A MATING LENGTH | DIM B TAIL LENGTH | PCB THICKNESS RANGE ACCOMMODATED BY PIN'S TAIL LENGTH | | | | |
|---|---|---|---|---|---|---|---|
| | | | WHEN MATING TO A 73981 OR 84688 SERIES RECEPTACLE | | WHEN MATING TO A 52057 SERIES METRAL 4000 RECEPTACLE | | |
| | | | ROWS A,B,C,D,E | GROUND ROW | ROWS:A,B,D,E | ROW C | GROUND ROW |
| 01* | 5.00 | 4.30 | 1.60 MIN | 1.60 MIN | 1.60 MIN | 1.60 MIN | 1.60 MIN |
| 22 | | 12.20 | 2.95 - 3.80 | 2.95 - 4.20 | 2.95 - 3.80 | 2.95 - 3.80 | 2.95 - 4.20 |
| 30 | | 12.95 | 2.95 - 4.55 | 3.25 - 4.95 | 2.95 - 4.55 | 2.95 - 4.55 | 3.25 - 4.95 |
| 05 | | 13.70 | 2.95 - 5.30 | 4.00 - 5.70 | 3.30 - 5.30 | 2.95 - 5.30 | 4.00 - 5.70 |
| 35 | | 14.45 | 3.05 - 6.05 | 4.75 - 6.45 | 4.05 - 6.05 | 3.05 - 6.05 | 4.75 - 6.45 |
| 48 | | 15.20 | 3.80 - 6.80 | 5.50 - 7.20 | 4.80 - 6.80 | 3.80 - 6.80 | 5.50 - 7.20 |
| 40 | | 15.70 | 4.30 - 7.30 | 6.00 - 7.70 | 5.30 - 7.30 | 4.30 - 7.30 | 6.00 - 7.70 |
| 65 | | 16.40 | 5.00 - 8.00 | 6.70 - 8.40 | 6.00 - 8.00 | 5.00 - 8.00 | 6.70 - 8.40 |
| 09 | | 17.10 | 5.70 - 8.70 | 7.40 - 9.10 | 6.70 - 8.70 | 5.70 - 8.70 | 7.40 - 9.10 |
| 02* | 5.75 | 4.30 | 1.60 MIN | 1.60 MIN | 1.60 MIN | 1.60 MIN | 1.60 MIN |
| 44 | | 12.20 | 2.95 - 3.80 | 2.95 - 4.20 | 2.95 - 3.80 | 2.95 - 3.80 | 2.95 - 4.20 |
| 31 | | 12.95 | 2.95 - 4.55 | 3.25 - 4.95 | 2.95 - 4.55 | 2.95 - 4.55 | 3.25 - 4.95 |
| 06 | | 13.70 | 2.95 - 5.30 | 4.00 - 5.70 | 3.30 - 5.30 | 2.95 - 5.30 | 4.00 - 5.70 |
| 36 | | 14.45 | 3.05 - 6.05 | 4.75 - 6.45 | 4.05 - 6.05 | 3.05 - 6.05 | 4.75 - 6.45 |
| 49 | | 15.20 | 3.80 - 6.80 | 5.50 - 7.20 | 4.80 - 6.80 | 3.80 - 6.80 | 5.50 - 7.20 |
| 25 | | 15.70 | 4.30 - 7.30 | 6.00 - 7.70 | 5.30 - 7.30 | 4.30 - 7.30 | 6.00 - 7.70 |
| 66 | | 16.40 | 5.00 - 8.00 | 6.70 - 8.40 | 6.00 - 8.00 | 5.00 - 8.00 | 6.70 - 8.40 |
| 10 | | 17.10 | 5.70 - 8.70 | 7.40 - 9.10 | 6.70 - 8.70 | 5.70 - 8.70 | 7.40 - 9.10 |
| 03* | 6.50 | 4.30 | 1.60 MIN | 1.60 MIN | 1.60 MIN | 1.60 MIN | 1.60 MIN |
| 45 | | 12.20 | 2.95 - 3.80 | 2.95 - 4.20 | 2.95 - 3.80 | 2.95 - 3.80 | 2.95 - 4.20 |
| 32 | | 12.95 | 2.95 - 4.55 | 3.25 - 4.95 | 2.95 - 4.55 | 2.95 - 4.55 | 3.25 - 4.95 |
| 07 | | 13.70 | 2.95 - 5.30 | 4.00 - 5.70 | 3.30 - 5.30 | 2.95 - 5.30 | 4.00 - 5.70 |
| 37 | | 14.45 | 3.05 - 6.05 | 4.75 - 6.45 | 4.05 - 6.05 | 3.05 - 6.05 | 4.75 - 6.45 |
| 50 | | 15.20 | 3.80 - 6.80 | 5.50 - 7.20 | 4.80 - 6.80 | 3.80 - 6.80 | 5.50 - 7.20 |
| 41 | | 15.70 | 4.30 - 7.30 | 6.00 - 7.70 | 5.30 - 7.30 | 4.30 - 7.30 | 6.00 - 7.70 |
| 24 | | 16.40 | 5.00 - 8.00 | 6.70 - 8.40 | 6.00 - 8.00 | 5.00 - 8.00 | 6.70 - 8.40 |
| 11 | | 17.10 | 5.70 - 8.70 | 7.40 - 9.10 | 6.70 - 8.70 | 5.70 - 8.70 | 7.40 - 9.10 |

* STUB PINS - NO REAR PLUG-UP

** THE GREATEST RANGE OCCURS WHEN THE B DIMENSION OF PIN 'GND' IS ONE SIZE SHORTER THEN THE OTHER PINS.

This document is the property of and embodies CONFIDENTIAL and PROPRIETARY information of FCI. No part of the information shown on this document may be used in any way or disclosed to others without the written consent of FCI. Copyright FCI.

| | | | | | | | |
|---|---|---|---|---|---|---|---|
| mat'l code SEE NOTE 5 | | | | tolerances unless otherwise specified | | | CUSTOMER COPY |
| ltr | ecn no. | dr | date | linear | 0.X ±0.3 | | |
| U | | | | | 0.XX ±0.13 | | projection |
| | | | | | .XXX ±.051 | | |
| | | | | angles | 0° ±2° | | |
| | | | | dr | K. BELL | 2000-03-15 | MM |
| | | | | engr | M. HAHN | 2000-03-15 | |
| | | | | chr | M. HAHN | 2000-03-15 | scale |
| | | | | appd | M. HAHN | 2000-03-15 | 1:1 |
| sheet index | revision sheet | | | | | | |

FCI www.fciconnect.com

title VERTICAL SIGNAL HDR 5 ROW P.F. 60 POS. SELECT LOAD STD.

product family METRAL 1000 | code 213

size A | dwg no 63743 | sheet 3

cage code 22526

Pro/E

REV E - 2006-04-18

PDM: Rev:U STATUS: Released Printed: May 13, 2011

| PIN CODE NO. | DIM A MATING LENGTH | DIM B TAIL LENGTH | PCB THICKNESS RANGE ACCOMMODATED BY PIN LENGTH | | | | |
|---|---|---|---|---|---|---|---|
| | | | WHEN MATING TO A 73981 OR 84688 SERIES RECEPTACLE | | WHEN MATING TO A 52057 SERIES METRAL 4000 RECEPTACLE | | |
| | | | ROWS A,B,C,D,E | GROUND ROW | ROWS:A,B,D,E | ROW C | GROUND ROW |
| 04* | 7.25 | 4.30 | 1.60 MIN | 1.60 MIN | 1.60 MIN | 1.60 MIN | 1.60 MIN |
| 46 | | 12.20 | 2.95 - 3.80 | 2.95 - 4.20 | 2.95 - 3.80 | 2.95 - 3.80 | 2.95 - 4.20 |
| 33 | | 12.95 | 2.95 - 4.55 | 3.25 - 4.95 | 2.95 - 4.55 | 2.95 - 4.55 | 3.25 - 4.95 |
| 08 | | 13.70 | 2.95 - 5.30 | 4.00 - 5.70 | 3.30 - 5.30 | 2.95 - 5.30 | 4.00 - 5.70 |
| 38 | | 14.45 | 3.05 - 6.05 | 4.75 - 6.45 | 4.05 - 6.05 | 3.05 - 6.05 | 4.75 - 6.45 |
| 51 | | 15.20 | 3.80 - 6.80 | 5.50 - 7.20 | 4.80 - 6.80 | 3.80 - 6.80 | 5.50 - 7.20 |
| 42 | | 15.70 | 4.30 - 7.30 | 6.00 - 7.70 | 5.30 - 7.30 | 4.30 - 7.30 | 6.00 - 7.70 |
| 67 | | 16.40 | 5.00 - 8.00 | 6.70 - 8.40 | 6.00 - 8.00 | 5.00 - 8.00 | 6.70 - 8.40 |
| 12 | | 17.10 | 5.70 - 8.70 | 7.40 - 9.10 | 6.70 - 8.70 | 5.70 - 8.70 | 7.40 - 9.10 |
| 19* | 8.00 | 4.30 | 1.60 MIN | 1.60 MIN | 1.60 MIN | 1.60 MIN | 1.60 MIN |
| 47 | | 12.20 | 2.95 - 3.80 | 2.95 - 4.20 | 2.95 - 3.80 | 2.95 - 3.80 | 2.95 - 4.20 |
| 34 | | 12.95 | 2.95 - 4.55 | 3.25 - 4.95 | 2.95 - 4.55 | 2.95 - 4.55 | 3.25 - 4.95 |
| 20 | | 13.70 | 2.95 - 5.30 | 4.00 - 5.70 | 3.30 - 5.30 | 2.95 - 5.30 | 4.00 - 5.70 |
| 39 | | 14.45 | 3.05 - 6.05 | 4.75 - 6.45 | 4.05 - 6.05 | 3.05 - 6.05 | 4.75 - 6.45 |
| 52 | | 15.20 | 3.80 - 6.80 | 5.50 - 7.20 | 4.80 - 6.80 | 3.80 - 6.80 | 5.50 - 7.20 |
| 43 | | 15.70 | 4.30 - 7.30 | 6.00 - 7.70 | 5.30 - 7.30 | 4.30 - 7.30 | 6.00 - 7.70 |
| 68 | | 16.40 | 5.00 - 8.00 | 6.70 - 8.40 | 6.00 - 8.00 | 5.00 - 8.00 | 6.70 - 8.40 |
| 21 | | 17.10 | 5.70 - 8.70 | 7.40 - 9.10 | 6.70 - 8.70 | 5.70 - 8.70 | 7.40 - 9.10 |

* STUB PINS - NO REAR PLUG-UP

** THE GREATEST RANGE OCCURS WHEN THE B DIMENSION OF PIN 'GND' IS ONE SIZE SHORTER THEN THE OTHER PINS.

| | | | | | | | |
|---|---|---|---|---|---|---|---|
| mat'l code SEE NOTE 5 | | | | tolerances unless otherwise specified | | | CUSTOMER COPY |
| ltr | ecn no. | dr | date | linear | 0.X ±0.3 | | |
| U | | | | | 0.XX ±0.13 | | projection |
| | | | | | .XXX ±.051 | | |
| | | | | angles | 0° ±2° | | |
| | | | | dr | K. BELL | 2000-03-15 | MM |
| | | | | engr | M. HAHN | 2000-03-15 | |
| | | | | chr | M. HAHN | 2000-03-15 | scale |
| | | | | appd | M. HAHN | 2000-03-15 | 1:1 |
| sheet index | revision sheet | | | | | | |

FCI www.fciconnect.com

title VERTICAL SIGNAL HDR 5 ROW P.F. 60 POS. SELECT LOAD STD.

product family METRAL 1000 | code 213

size A | dwg no 63743 | sheet 4

cage code 22526

Pro/E

This document is the property of and embodies CONFIDENTIAL and PROPRIETARY information of FCI. No part of the information shown on this document may be used in any way or disclosed to others without the written consent of FCI. Copyright FCI.

REV E - 2006-04-18

PDM: Rev:U STATUS: Released Printed: May 13, 2011

## SELECT LOAD PATTERNS

| METRAL P/N | ROW | CONTACT CODE 1 | 2 | 3 | 4 | 5 | 6 | 7 | 8 | 9 | 10 | 11 | 12 |
|---|---|---|---|---|---|---|---|---|---|---|---|---|---|
| 63743-X001 FOR LEAD FREE SEE NOTE 16 | E | 02 | 02 | 02 | 02 | 02 | 02 | 02 | 02 | 02 | 02 | 02 | 02 |
| | D | 02 | 02 | 02 | 02 | 02 | 02 | 02 | 02 | 02 | 02 | 02 | 02 |
| | C | 04 | 04 | 04 | 04 | 04 | 04 | 04 | 04 | 04 | 04 | 04 | 04 |
| | B | 02 | 02 | 02 | 02 | 02 | 02 | 02 | 02 | 02 | 02 | 02 | 02 |
| | A | 02 | 02 | 02 | 02 | 02 | 02 | 02 | 02 | 02 | 02 | 02 | 02 |
| | GND | 02 | 02 | 02 | 02 | 02 | 02 | 02 | 02 | 02 | 02 | 02 | 02 |

| METRAL P/N | ROW | CONTACT CODE 1 | 2 | 3 | 4 | 5 | 6 | 7 | 8 | 9 | 10 | 11 | 12 |
|---|---|---|---|---|---|---|---|---|---|---|---|---|---|
| 63743-X002 FOR LEAD FREE SEE NOTE 16 | E | 01 | 01 | 01 | 01 | 01 | 01 | 01 | 01 | 01 | 01 | 01 | 01 |
| | D | 01 | 01 | 01 | 01 | 01 | 01 | 01 | 01 | 01 | 01 | 01 | 01 |
| | C | 03 | 03 | 03 | 03 | 03 | 03 | 03 | 03 | 03 | 03 | 03 | 03 |
| | B | 01 | 01 | 01 | 01 | 01 | 01 | 01 | 01 | 01 | 01 | 01 | 01 |
| | A | 01 | 01 | 01 | 01 | 01 | 01 | 01 | 01 | 01 | 01 | 01 | 01 |
| | GND | 01 | 01 | 01 | 01 | 01 | 01 | 01 | 01 | 01 | 01 | 01 | 01 |

| METRAL P/N | ROW | CONTACT CODE 1 | 2 | 3 | 4 | 5 | 6 | 7 | 8 | 9 | 10 | 11 | 12 |
|---|---|---|---|---|---|---|---|---|---|---|---|---|---|
| 63743-X003 *RPU FOR LEAD FREE SEE NOTE 16 | E | 48 | 48 | 48 | 48 | 48 | 48 | 48 | 48 | 48 | 48 | 48 | 48 |
| | D | 48 | 48 | 48 | 48 | 48 | 48 | 48 | 48 | 48 | 48 | 48 | 48 |
| | C | 50 | 50 | 50 | 50 | 50 | 50 | 50 | 50 | 50 | 50 | 50 | 50 |
| | B | 48 | 48 | 48 | 48 | 48 | 48 | 48 | 48 | 48 | 48 | 48 | 48 |
| | A | 48 | 48 | 48 | 48 | 48 | 48 | 48 | 48 | 48 | 48 | 48 | 48 |
| | GND | 48 | 48 | 48 | 48 | 48 | 48 | 48 | 48 | 48 | 48 | 48 | 48 |

| METRAL P/N | ROW | CONTACT CODE 1 | 2 | 3 | 4 | 5 | 6 | 7 | 8 | 9 | 10 | 11 | 12 |
|---|---|---|---|---|---|---|---|---|---|---|---|---|---|
| 63743-X004 FOR LEAD FREE SEE NOTE 16 | E | 19 | 02 | 02 | 02 | 02 | 02 | 02 | 02 | 02 | 02 | 02 | 02 |
| | D | 19 | 02 | 02 | 02 | 02 | 02 | 02 | 02 | 02 | 02 | 02 | 02 |
| | C | 19 | 02 | 02 | 02 | 02 | 02 | 02 | 02 | 02 | 02 | 02 | 02 |
| | B | 19 | 02 | 02 | 02 | 02 | 02 | 02 | 02 | 02 | 02 | 02 | 02 |
| | A | 19 | 02 | 02 | 02 | 02 | 02 | 02 | 02 | 02 | 02 | 02 | 02 |
| | GND | 02 | 02 | 02 | 02 | 02 | 02 | 02 | 02 | 02 | 02 | 02 | 02 |

| METRAL P/N | ROW | CONTACT CODE 1 | 2 | 3 | 4 | 5 | 6 | 7 | 8 | 9 | 10 | 11 | 12 |
|---|---|---|---|---|---|---|---|---|---|---|---|---|---|
| 63743-X005 FOR LEAD FREE SEE NOTE 16 | E | 01 | 01 | 01 | 01 | 01 | 01 | 01 | 01 | 01 | 01 | 01 | 01 |
| | D | 01 | 01 | 01 | 01 | 01 | 02 | 01 | 01 | 01 | 01 | 01 | 02 |
| | C | 01 | 01 | 01 | 01 | 01 | 01 | 01 | 01 | 01 | 01 | 01 | 01 |
| | B | 01 | 01 | 01 | 01 | 01 | 01 | 01 | 01 | 01 | 01 | 01 | 01 |
| | A | 01 | 01 | 03 | 01 | 01 | 03 | 01 | 01 | 03 | 01 | 01 | 03 |
| | GND | 01 | 01 | 01 | 01 | 01 | 01 | 01 | 01 | 01 | 01 | 01 | 01 |

*REAR PLUG-UP PART NUMBER

| METRAL P/N | ROW | CONTACT CODE 1 | 2 | 3 | 4 | 5 | 6 | 7 | 8 | 9 | 10 | 11 | 12 |
|---|---|---|---|---|---|---|---|---|---|---|---|---|---|
| 63743-X006 FOR LEAD FREE SEE NOTE 16 | E | 01 | 01 | 01 | 01 | 01 | 01 | 01 | 01 | 01 | 01 | 01 | 01 |
| | D | 02 | 01 | 01 | 01 | 01 | 01 | 02 | 01 | 01 | 01 | 01 | 01 |
| | C | 02 | 01 | 01 | 01 | 01 | 01 | 02 | 01 | 01 | 01 | 01 | 01 |
| | B | 03 | 03 | 03 | 03 | 03 | 03 | 03 | 03 | 03 | 03 | 03 | 03 |
| | A | 01 | 01 | 01 | 01 | 01 | 01 | 01 | 01 | 01 | 01 | 01 | 01 |
| | GND | 01 | 01 | 01 | 01 | 01 | 01 | 01 | 01 | 01 | 01 | 01 | 01 |

| METRAL P/N | ROW | CONTACT CODE 1 | 2 | 3 | 4 | 5 | 6 | 7 | 8 | 9 | 10 | 11 | 12 |
|---|---|---|---|---|---|---|---|---|---|---|---|---|---|
| 63743-X007 FOR LEAD FREE SEE NOTE 16 | E | 02 | 02 | 02 | 02 | 01 | 02 | 02 | 02 | 02 | 02 | 02 | 02 |
| | D | 02 | 02 | 02 | 02 | 02 | 02 | 02 | 02 | 02 | 02 | 02 | 02 |
| | C | 02 | 02 | 02 | 02 | 02 | 02 | 02 | 02 | 02 | 02 | 02 | 02 |
| | B | 02 | 02 | 02 | 02 | 02 | 02 | 02 | 02 | 02 | 02 | 02 | 02 |
| | A | 02 | 02 | 02 | 02 | 02 | 02 | 02 | 02 | 02 | 02 | 02 | 02 |
| | GND | 02 | 02 | 02 | 02 | 02 | 02 | 02 | 02 | 02 | 02 | 02 | 02 |

| METRAL P/N | ROW | CONTACT CODE 1 | 2 | 3 | 4 | 5 | 6 | 7 | 8 | 9 | 10 | 11 | 12 |
|---|---|---|---|---|---|---|---|---|---|---|---|---|---|
| 63743-X008 FOR LEAD FREE SEE NOTE 16 | E | 02 | 02 | 02 | 02 | 01 | 02 | 02 | 02 | 02 | 02 | 02 | 02 |
| | D | 02 | 02 | 02 | 02 | 02 | 02 | 02 | 02 | 02 | 02 | 02 | 02 |
| | C | 02 | 02 | 02 | 02 | 02 | 02 | 02 | 02 | 02 | 02 | 02 | 02 |
| | B | 02 | 02 | 02 | 02 | 03 | 02 | 02 | 02 | 02 | 02 | 03 | 02 |
| | A | 02 | 02 | 02 | 02 | 02 | 02 | 02 | 02 | 02 | 02 | 02 | 02 |
| | GND | 02 | 02 | 02 | 02 | 02 | 02 | 02 | 02 | 02 | 02 | 02 | 02 |

| METRAL P/N | ROW | CONTACT CODE 1 | 2 | 3 | 4 | 5 | 6 | 7 | 8 | 9 | 10 | 11 | 12 |
|---|---|---|---|---|---|---|---|---|---|---|---|---|---|
| 63743-X009 *RPU FOR LEAD FREE SEE NOTE 16 | E | 06 | 05 | 06 | 05 | 06 | 05 | 06 | 05 | 06 | 05 | 06 | 05 |
| | D | 06 | 06 | 06 | 06 | 06 | 05 | 06 | 05 | 05 | 05 | 05 | 05 |
| | C | 06 | 05 | 05 | 05 | 05 | 05 | 06 | 05 | 05 | 05 | 05 | 05 |
| | B | 06 | 05 | 05 | 05 | 05 | 05 | 06 | 05 | 05 | 05 | 05 | 05 |
| | A | 06 | 05 | 05 | 05 | 05 | 05 | 06 | 05 | 05 | 05 | 05 | 05 |
| | GND | 31 | 31 | 31 | 31 | 31 | 31 | 31 | 31 | 31 | 31 | 31 | 31 |

PCB THICKNESS RANGE FOR REAR PLUG UP APPLICATIONS: 3.25 - 4.99 FOR METRAL 1000 RECEPTACLE APPLICATIONS AND 3.30 - 4.95 FOR METRAL 4000 APPLICATIONS

| METRAL P/N | ROW | CONTACT CODE 1 | 2 | 3 | 4 | 5 | 6 | 7 | 8 | 9 | 10 | 11 | 12 |
|---|---|---|---|---|---|---|---|---|---|---|---|---|---|
| 63743-X010 FOR LEAD FREE SEE NOTE 16 | E | 55 | 55 | 02 | 02 | 02 | 02 | 55 | 55 | 55 | 55 | 55 | 55 |
| | D | 55 | 55 | 02 | 02 | 02 | 02 | 55 | 55 | 55 | 55 | 55 | 55 |
| | C | 55 | 55 | 02 | 02 | 02 | 02 | 55 | 55 | 55 | 55 | 55 | 55 |
| | B | 55 | 55 | 02 | 02 | 02 | 02 | 55 | 55 | 55 | 55 | 55 | 55 |
| | A | 55 | 55 | 02 | 02 | 02 | 02 | 55 | 55 | 55 | 55 | 55 | 55 |
| | GND | 55 | 55 | 02 | 02 | 02 | 02 | 55 | 55 | 55 | 55 | 55 | 55 |

NOT A STANDARD METRAL 1000 OR METRAL 4000 APPLICATION

| METRAL P/N | ROW | CONTACT CODE 1 | 2 | 3 | 4 | 5 | 6 | 7 | 8 | 9 | 10 | 11 | 12 |
|---|---|---|---|---|---|---|---|---|---|---|---|---|---|
| 63743-X011 FOR LEAD FREE SEE NOTE 16 | E | 55 | 55 | 55 | 55 | 55 | 55 | 55 | 55 | 55 | 55 | 55 | 55 |
| | D | 55 | 55 | 55 | 55 | 55 | 55 | 55 | 55 | 55 | 55 | 55 | 55 |
| | C | 55 | 55 | 55 | 55 | 55 | 55 | 55 | 55 | 55 | 55 | 55 | 55 |
| | B | 55 | 55 | 55 | 55 | 55 | 55 | 55 | 55 | 55 | 55 | 55 | 55 |
| | A | 55 | 55 | 55 | 55 | 55 | 55 | 55 | 55 | 55 | 55 | 55 | 55 |
| | GND | 55 | 55 | 55 | 55 | 55 | 55 | 55 | 55 | 55 | 55 | 55 | 55 |

| METRAL P/N | ROW | CONTACT CODE 1 | 2 | 3 | 4 | 5 | 6 | 7 | 8 | 9 | 10 | 11 | 12 |
|---|---|---|---|---|---|---|---|---|---|---|---|---|---|
| 63743-X012 FOR LEAD FREE SEE NOTE 16 | E | 02 | 02 | 02 | 02 | 02 | 02 | 02 | 02 | 02 | 02 | 02 | 02 |
| | D | 02 | 02 | 02 | 02 | 02 | 02 | 02 | 02 | 02 | 02 | 02 | 02 |
| | C | 02 | 02 | 02 | 02 | 02 | 02 | 02 | 02 | 02 | 02 | 02 | 02 |
| | B | 02 | 02 | 02 | 02 | 02 | 02 | 02 | 02 | 02 | 02 | 02 | 02 |
| | A | 02 | 02 | 02 | 02 | 02 | 02 | 02 | 02 | 02 | 02 | 02 | 02 |
| | GND | - | 02 | 02 | 02 | 02 | - | - | 02 | 02 | 02 | 02 | - |

| mat'l code SEE NOTE 5 | | | | tolerances unless otherwise specified | | | CUSTOMER COPY | FCI www.fciconnect.com |
|---|---|---|---|---|---|---|---|---|
| ltr | ecn no. | dr | date | linear | 0.X ±0.3 | | projection | title VERTICAL SIGNAL HDR 5 ROW P.F. 60 POS. SELECT LOAD STD. |
| U | | | | | 0.XX ±0.13 | | | |
| | | | | | .XXX ±.051 | | | |
| | | | | angles | 0° ±2° | | | |
| | | | | dr | K. BELL | 2000-03-15 | MM | product family METRAL 1000 / code 213 |
| | | | | engr | M. HAHN | 2000-03-15 | | size A / dwg no 63743 |
| | | | | chr | M. HAHN | 2000-03-15 | scale 1:1 | sheet 5 |
| | | | | appd | M. HAHN | 2000-03-15 | | |
| sheet index | revision sheet | | | | | | | cage code 22526 |

This document is the property of and embodies CONFIDENTIAL and PROPRIETARY information of FCI. No part of the information shown on this document may be used in any way or disclosed to others without the written consent of FCI. Copyright FCI.

REV E - 2006-04-18

Pro/E

PDM: Rev:U STATUS: Released Printed: May 13, 2011

| PRODUCT NUMBER |
|---|
| SEE SHEET 1 |

NOTES:

1. SEE APPLICATION SPECIFICATION GS-20-010 FOR INFORMATION ON AVAILABLE TOOLING, CIRCUIT BOARD DESIGN CONSIDERATIONS, REPAIR PROCEDURES AND PRODUCT OFFERINGS.

2. SEE FCI PUBLICATION 950511-028 FOR "ELECTRICAL PERFORMANCE DATA FOR DIFFERENTIAL APPLICATIONS."

3. SEE FCI PUBLICATION 950511-029 FOR "ELECTRICAL PERFORMANCE DATA FOR SINGLE-ENDED APPLICATION."

4. UNLESS OTHERWISE SPECIFIED, ALL DIMENSIONS AND TOLERANCES ARE IN ACCORDANCE WITH ASME Y14.5, 1994

5. HOUSING MATERIAL: LIQUID CRYSTAL POLYMER, 30% GLASS FILLED, FLAME RETARDANT PER UL 94-V0.
   PIN MATERIAL: PHOSPHER BRONZE
   GROUND SPRING MATERIAL: PHOSPHER BRONZE

6. PLATING INFORMATION: PLATING IN CONTACT AREAS MEET PERFORMANCE LEVELS SHOWN IN TABLE ON SHEET 1.
   PLATING ON "LF" TAILS IS Sn ONLY, ALL OTHERS ARE SnPb.

7. DIMENSIONAL RESTRICTIONS OF PINS IN HEADERS.
   FOR MATING WITH METRAL 1000 RECEPTACLES
   DIM A : 5.00mm MIN, 8.00mm MAX FOR ROWS A-E
   DIM A : 5.00mm MIN, 5.75mm MAX FOR ROW GND NEXT TO ROW A
   DIM C : 5.00mm MIN, 8.00mm MAX FOR ROWS A-E
   DIM C : 4.60mm MIN, 6.30mm MAX FOR ROW GND NEXT TO ROW A
   FOR MATING WITH METRAL 4000 RECEPTACLES
   DIM A : 5.00mm MIN, 6.50mm MAX FOR ROWS A, B, D & E
   DIM A : 5.00mm MIN, 8.00mm MAX FOR ROW C
   DIM A : 5.00mm MIN, 5.75mm MAX FOR ROW GND NEXT TO ROW A
   DIM C : 5.00mm MIN, 7.00mm MAX FOR ROWS A, B, D & E
   DIM C : 5.00mm MIN, 8.00mm MAX FOR ROW C
   DIM C : 4.60mm MIN, 6.30mm MAX FOR ROW GND NEXT TO ROW A

8. THE MIN PCB THICKNESS FOR REAR PLUG-UP APPLICATIONS IS 2.9mm SINCE THE COMPLIANT SECTIONS OF THE GROUND SPRING OF THE HEADER DIRECTLY OPPOSE THE GROUND SPRING OF THE SHROUD.
   THE MIN PCB THICKNESS FOR FRONT PLUG-UP ONLY APPLICATIONS IS 1.6mm.

9. THESE HOLES ARE NEEDED FOR REAR PLUG-UP DESIGNS USING A SHROUD AND MAY BE OMITTED FOR FRONT PLUG-UP ONLY DESIGNS.

10. THE 'CONNECTOR OUTLINE' IS THE MIN OUTLINE REQUIRED. TO DETERMINE THE OUTLINE NECESSARY TO PERMIT THE VARIOUS TYPES OF REPAIR OPERATIONS, SEE APPLICATION SPECIFICATION GS-20-010.

11. CURRENT RATING: 1 AMP PER PIN

12. TEMPERATURE RANGE: -55°C TO +105°C

13. P/N 63743-XYYYLF
    - L — LEAD FREE (OPTIONAL)
    - YYY — SELECT LOAD PATTERN
    - X — PLATING CODE

14. A PLATING HAS Au FLASH IN PRESS-FIT AREA (LEAD FREE).

15. THE PRODUCTS WHERE THE PART NUMBER ENDS IN LF MEET THE EUROPEAN UNION DIRECTIVES AND OTHER COUNTRY REGULATIONS AS DESCRIBED IN GS-22-008.

    ALL PRODUCTS WILL WITHSTAND EXPOSURE TO 260°C FOR 60 SECONDS IN A CONVECTION, INFRA-RED OR VAPOR PHASE REFLOW OVEN.

16. FOR LEAD FREE PART NUMBERS, ADD AN "LF" SUFFIX.
    EXAMPLE: 63743-X01LF

17. EQUIVALENT PRECIOUS METAL PLATINGS MAY BE SUBSTITUTED.

18. PIN TYPE IS AT THE MANUFACTURERS OPTION AND CAN BE EITHER BABY-H OR EYE OF THE NEEDLE STYLE

| mat'l code SEE NOTE 5 | | | | tolerances unless otherwise specified | | | CUSTOMER COPY | FCI www.fciconnect.com | | |
|---|---|---|---|---|---|---|---|---|---|---|
| ltr | ecn no. | dr | date | linear | 0.X ±0.3 | | projection | title VERTICAL SIGNAL HDR 5 ROW P.F. 60 POS. SELECT LOAD STD. | | |
| U | | | | | 0.XX ±0.13 | | | | | |
| | | | | | .XXX ±.051 | | | | | |
| | | | | angles | 0° ±2° | | | | | |
| | | | | dr | K. BELL | 2000-03-15 | MM | product family METRAL 1000 | code 213 | |
| | | | | engr | M. HAHN | 2000-03-15 | | size A | dwg no 63743 | |
| | | | | chr | M. HAHN | 2000-03-15 | scale 1:1 | | sheet 6 | |
| | | | | appd | M. HAHN | 2000-03-15 | | | | |
| sheet index | revision sheet | | | | | | | | | |

cage code 22526

Pro/E

This document is the property of and embodies CONFIDENTIAL and PROPRIETARY information of FCI. No part of the information shown on this document may be used in any way or disclosed to others without the written consent of FCI. Copyright FCI.

REV E - 2006-04-18

PDM: Rev:U STATUS: Released Printed: May 13, 2011

Компания «ЭлектроПласт» предлагает заключение долгосрочных отношений при поставках импортных электронных компонентов на взаимовыгодных условиях!

Наши преимущества:

- Оперативные поставки широкого спектра электронных компонентов отечественного и импортного производства напрямую от производителей и с крупнейших мировых складов;
- Поставка более 17-ти миллионов наименований электронных компонентов;
- Поставка сложных, дефицитных, либо снятых с производства позиций;
- Оперативные сроки поставки под заказ (от 5 рабочих дней);
- Экспресс доставка в любую точку России;
- Техническая поддержка проекта, помощь в подборе аналогов, поставка прототипов;
- Система менеджмента качества сертифицирована по Международному стандарту ISO 9001;
- Лицензия ФСБ на осуществление работ с использованием сведений, составляющих государственную тайну;
- Поставка специализированных компонентов (Xilinx, Altera, Analog Devices, Intersil, Interpoint, Microsemi, Aeroflex, Peregrine, Syfer, Eurofarad, Texas Instrument, Miteq, Cobham, E2V, MA-COM, Hittite, Mini-Circuits,General Dynamics и др.);

Помимо этого, одним из направлений компании «ЭлектроПласт» является направление «Источники питания». Мы предлагаем Вам помощь Конструкторского отдела:

- Подбор оптимального решения, техническое обоснование при выборе компонента;
- Подбор аналогов;
- Консультации по применению компонента;
- Поставка образцов и прототипов;
- Техническая поддержка проекта;
- Защита от снятия компонента с производства.

**Как с нами связаться**

**Телефон:** 8 (812) 309 58 32 (многоканальный)
**Факс:** 8 (812) 320-02-42
**Электронная почта:** org@eplast1.ru
**Адрес:** 198099, г. Санкт-Петербург, ул. Калинина, дом 2, корпус 4, литера А.