74ABT00

Quad 2-input NAND gate

Rev. 3 — 11 August 2016 Product data sheet

1. General description

The 74ABT00 high-performance BiCMOS device combines low static and dynamic power dissipation with high speed and high output drive.

The 74ABT00 is a quad 2-input NAND gate.

2. Features and benefits

- Latch-up protection exceeds 500 mA per JESD78B class II level A
- ESD protection:
  - HBM JESD22-A114F exceeds 2000 V
  - MM JESD22-A115-A exceeds 200 V
- Multiple package options
- Specified from –40 °C to +85 °C

3. Ordering information

Table 1. Ordering information

Type number	Package			
	Temperature range	Name	Description	Version
74ABT00D	–40 °C to +85 °C	SO14	plastic small outline package; 14 leads; body width 3.9 mm	SOT108-1
74ABT00DB	–40 °C to +85 °C	SSOP14	plastic shrink small outline package; 14 leads; body width 5.3 mm	SOT337-1
74ABT00PW	–40 °C to +85 °C	TSSOP14	plastic thin shrink small outline package; 14 leads; body width 4.4 mm	SOT402-1

nexperia

4. Functional diagram

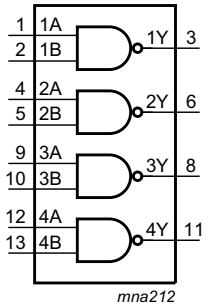

Fig 1. Logic symbol

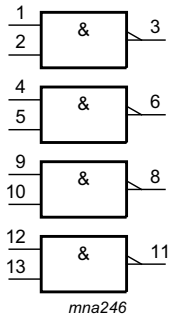

Fig 2. IEC logic symbol

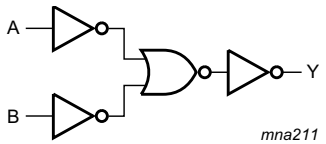

Fig 3. Logic diagram (one gate)

5. Pinning information

5.1 Pinning

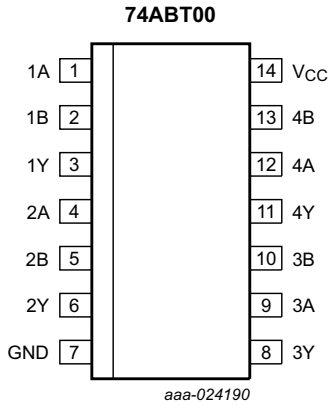

Fig 4. Pin configuration for SO14

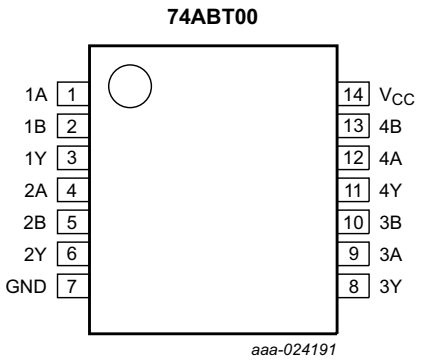

Fig 5. Pin configuration for SSOP14 and TSSOP14

5.2 Pin description

Table 2. Pin description

Symbol	Pin	Description
1A to 4A	1, 4, 9, 12	data input
1B to 4B	2, 5, 10, 13	data input
1Y to 4Y	3, 6, 8, 11	data output
GND	7	ground (0 V)
V_{CC}	14	supply voltage

All information provided in this document is subject to legal disclaimers.

© Nexperia B.V. 2017. All rights reserved

6. Functional description

Table 3. Function table[1]

Input		Output
nA	**nB**	**nY**
L	X	H
X	L	H
H	H	L

[1] H = HIGH voltage level; L = LOW voltage level; X = don't care.

7. Limiting values

Table 4. Limiting values

In accordance with the Absolute Maximum Rating System (IEC 60134).

Symbol	Parameter	Conditions		Min	Max	Unit
V_{CC}	supply voltage			–0.5	+7.0	V
V_I	input voltage		[1]	–1.2	+7.0	V
V_O	output voltage	output HIGH or LOW	[1]	–0.5	+5.5	V
I_{IK}	input clamping current	$V_I < 0$ V		–18	-	mA
I_{OK}	output clamping current	$V_O < 0$ V		–50	-	mA
I_O	output current	output in LOW-state		-	40	mA
T_j	junction temperature		[2]	-	150	°C
T_{stg}	storage temperature			–65	+150	°C

[1] The input and output voltage ratings may be exceeded if the input and output current ratings are observed.

[2] The performance capability of a high-performance integrated circuit in conjunction with its thermal environment can create junction temperatures which are detrimental to reliability. The maximum junction temperature of this integrated circuit should not exceed 150 °C.

8. Recommended operating conditions

Table 5. Operating conditions

Voltages are referenced to GND (ground = 0 V).

Symbol	Parameter	Conditions	Min	Typ	Max	Unit
V_{CC}	supply voltage		4.5	-	5.5	V
V_I	input voltage		0	-	V_{CC}	V
V_{IH}	HIGH-level input voltage		2.0	-	-	V
V_{IL}	LOW-level input voltage		-	-	0.8	V
I_{OH}	HIGH-level output current		–15	-	-	mA
I_{OL}	LOW-level output current		-	-	20	mA
$\Delta t/\Delta V$	input transition rise and fall rate		0	-	5	ns/V
T_{amb}	ambient temperature	in free air	–40	-	+85	°C

All information provided in this document is subject to legal disclaimers.

© Nexperia B.V. 2017. All rights reserved

9. Static characteristics

Table 6. Static characteristics

Symbol	Parameter	Conditions		25 °C			–40 °C to +85 °C		Unit
				Min	Typ	Max	Min	Max	
V_{IK}	input clamping voltage	V_{CC} = 4.5 V; I_{IK} = –18 mA		–1.2	–0.9	-	–1.2	-	V
V_{OH}	HIGH-level output voltage	V_{CC} = 4.5 V; I_{OH} = –15 mA; $V_I = V_{IL}$ or V_{IH}		2.5	2.9	-	2.5	-	V
V_{OL}	LOW-level output voltage	V_{CC} = 4.5 V; I_{OL} = 20 mA; $V_I = V_{IL}$ or V_{IH}		-	0.35	0.5	-	0.5	V
I_I	input leakage current	V_{CC} = 5.5 V; V_I = GND or 5.5 V		-	±0.01	±1.0	-	±1.0	μA
I_{OFF}	power-off leakage current	V_{CC} = 0 V; V_I or $V_O \leq$ 4.5 V		-	±5.0	±100	-	±100	μA
I_{CEX}	output high leakage current	HIGH-state; V_O = 5.5 V; V_{CC} = 5.5 V; V_I = GND or V_{CC}		-	5.0	50	-	50	μA
I_O	output current	V_{CC} = 5.5 V; V_O = 2.5 V	[1]	–50	–75	–180	–50	–180	mA
I_{CC}	supply current	V_{CC} = 5.5 V; V_I = GND or V_{CC}		-	2	50	-	50	μA
ΔI_{CC}	additional supply current	per input pin; V_{CC} = 5.5 V; one input at 3.4 V; other inputs at V_{CC} or GND	[2]	-	0.25	500	-	500	μA
C_I	input capacitance	V_I = 0 V or V_{CC}		-	3	-	-	-	pF

[1] Not more than one output should be tested at a time, and the duration of the test should not exceed one second.

[2] This is the increase in supply current for each input at 3.4 V.

10. Dynamic characteristics

Table 7. Dynamic characteristics

GND = 0 V; for test circuit, see Figure 7.

Symbol	Parameter	Conditions		25 °C; V_{CC} = 5.0 V			–40 °C to +85 °C; V_{CC} = 5.0 V ± 0.5 V		Unit
				Min	Typ	Max	Min	Max	
t_{PLH}	LOW to HIGH propagation delay	nA, nB to nY; see Figure 6		1.0	2.5	3.6	1.0	4.1	ns
t_{PHL}	HIGH to LOW propagation delay	nA, nB to nY; see Figure 6		1.0	2.0	2.8	1.0	3.4	ns
$t_{sk(o)}$	output skew time		[1]	-	0.4	0.5	-	0.5	ns

[1] Skew between any two outputs of the same package switching in the same direction. This parameter is guaranteed by design.

All information provided in this document is subject to legal disclaimers.

© Nexperia B.V. 2017. All rights reserved

11. Waveforms

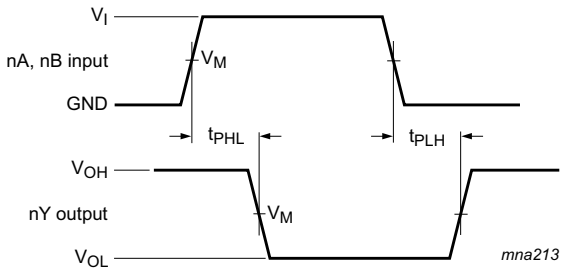

V_M = 1.5 V

V_{OL} and V_{OH} are typical output voltage levels that occur with the output load.

Fig 6. Propagation delay input (nA, nB) to output (nY) and output skew time

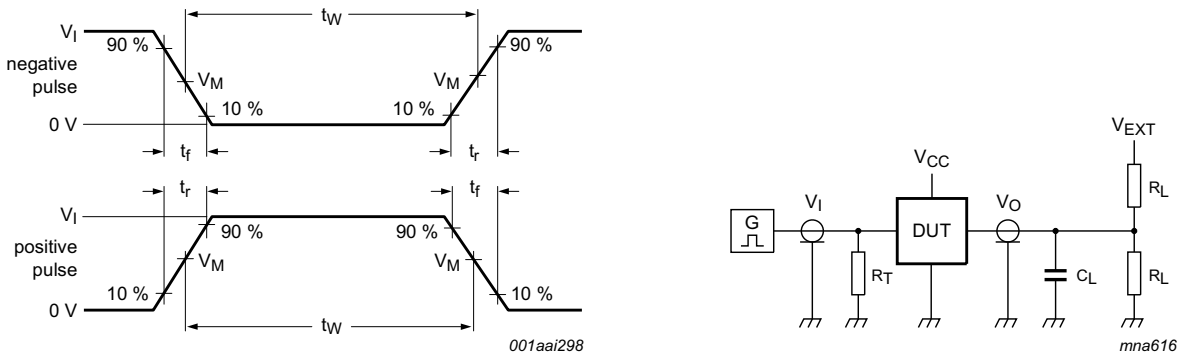

a. Input pulse definition

b. Test circuit

Test data is given in Table 8.

R_L = Load resistance.

C_L = Load capacitance including jig and probe capacitance.

R_T = Termination resistance should be equal to output impedance Z_o of the pulse generator.

V_{EXT} = External voltage for measuring switching times.

Fig 7. Test circuit for measuring switching times

Table 8. Test data

Input				Load		V_{EXT}
V_I	f_i	t_W	t_r, t_f	C_L	R_L	t_{PHL}, t_{PLH}
3.0 V	1 MHz	500 ns	≤ 2.5 ns	50 pF	500 Ω	open

All information provided in this document is subject to legal disclaimers.

© Nexperia B.V. 2017. All rights reserved

12. Package outline

SO14: plastic small outline package; 14 leads; body width 3.9 mm **SOT108-1**

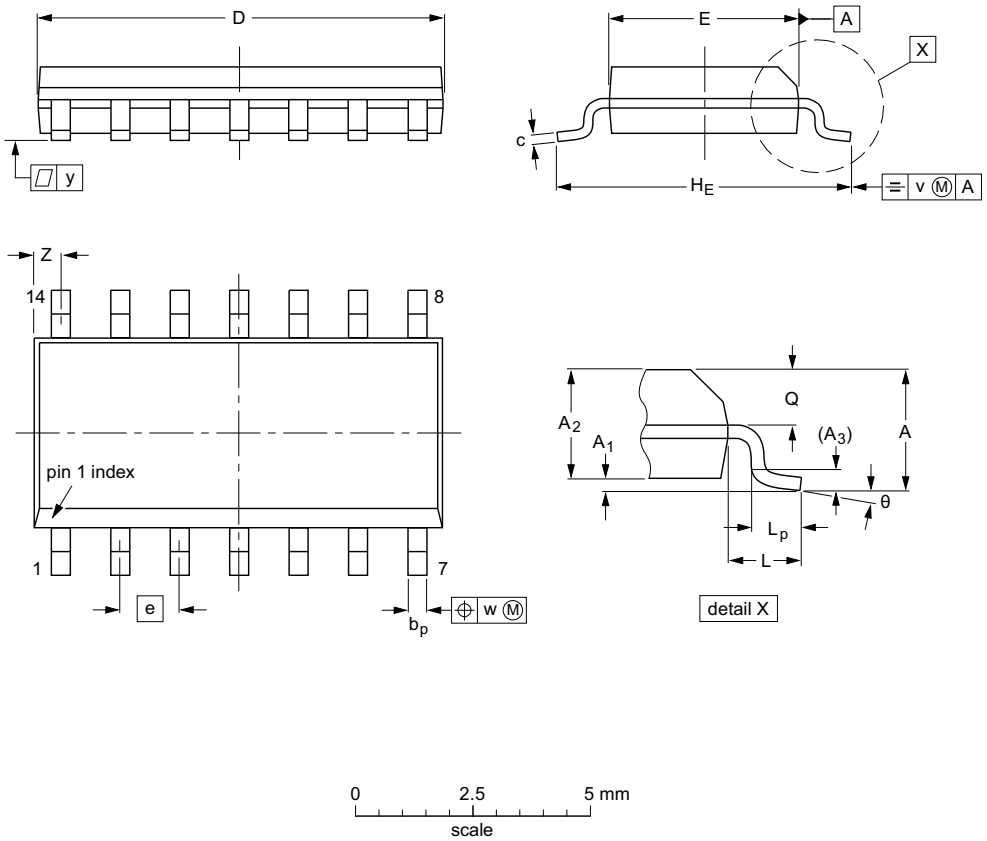

DIMENSIONS (inch dimensions are derived from the original mm dimensions)

UNIT	A max.	A_1	A_2	A_3	b_p	c	D(1)	E(1)	e	H_E	L	L_p	Q	v	w	y	Z(1)	θ
mm	1.75	0.25 0.10	1.45 1.25	0.25	0.49 0.36	0.25 0.19	8.75 8.55	4.0 3.8	1.27	6.2 5.8	1.05	1.0 0.4	0.7 0.6	0.25	0.25	0.1	0.7 0.3	8° 0°
inches	0.069	0.010 0.004	0.057 0.049	0.01	0.019 0.014	0.0100 0.0075	0.35 0.34	0.16 0.15	0.05	0.244 0.228	0.041	0.039 0.016	0.028 0.024	0.01	0.01	0.004	0.028 0.012	

Note

1. Plastic or metal protrusions of 0.15 mm (0.006 inch) maximum per side are not included.

OUTLINE VERSION	REFERENCES				EUROPEAN PROJECTION	ISSUE DATE
	IEC	JEDEC	JEITA			
SOT108-1	076E06	MS-012				~~99-12-27~~ 03-02-19

Fig 8. Package outline SOT108-1 (SO14)

All information provided in this document is subject to legal disclaimers.

© Nexperia B.V. 2017. All rights reserved

SSOP14: plastic shrink small outline package; 14 leads; body width 5.3 mm **SOT337-1**

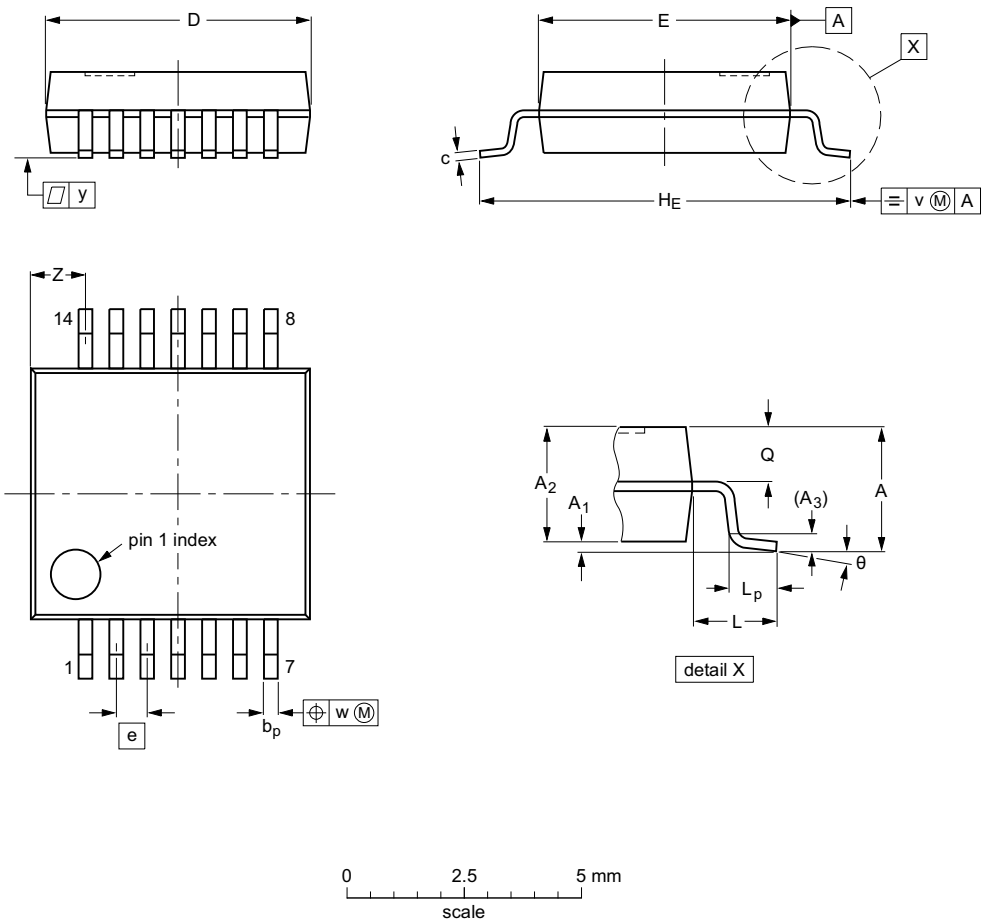

DIMENSIONS (mm are the original dimensions)

UNIT	A max.	A_1	A_2	A_3	b_p	c	D (1)	E (1)	e	H_E	L	L_p	Q	v	w	y	Z (1)	θ
mm	2	0.21 0.05	1.80 1.65	0.25	0.38 0.25	0.20 0.09	6.4 6.0	5.4 5.2	0.65	7.9 7.6	1.25	1.03 0.63	0.9 0.7	0.2	0.13	0.1	1.4 0.9	8° 0°

Note

1. Plastic or metal protrusions of 0.25 mm maximum per side are not included.

OUTLINE VERSION	REFERENCES				EUROPEAN PROJECTION	ISSUE DATE
	IEC	JEDEC	JEITA			
SOT337-1		MO-150				~~99-12-27~~ 03-02-19

Fig 9. Package outline SOT337-1 (SSOP14)

All information provided in this document is subject to legal disclaimers.

© Nexperia B.V. 2017. All rights reserved

TSSOP14: plastic thin shrink small outline package; 14 leads; body width 4.4 mm **SOT402-1**

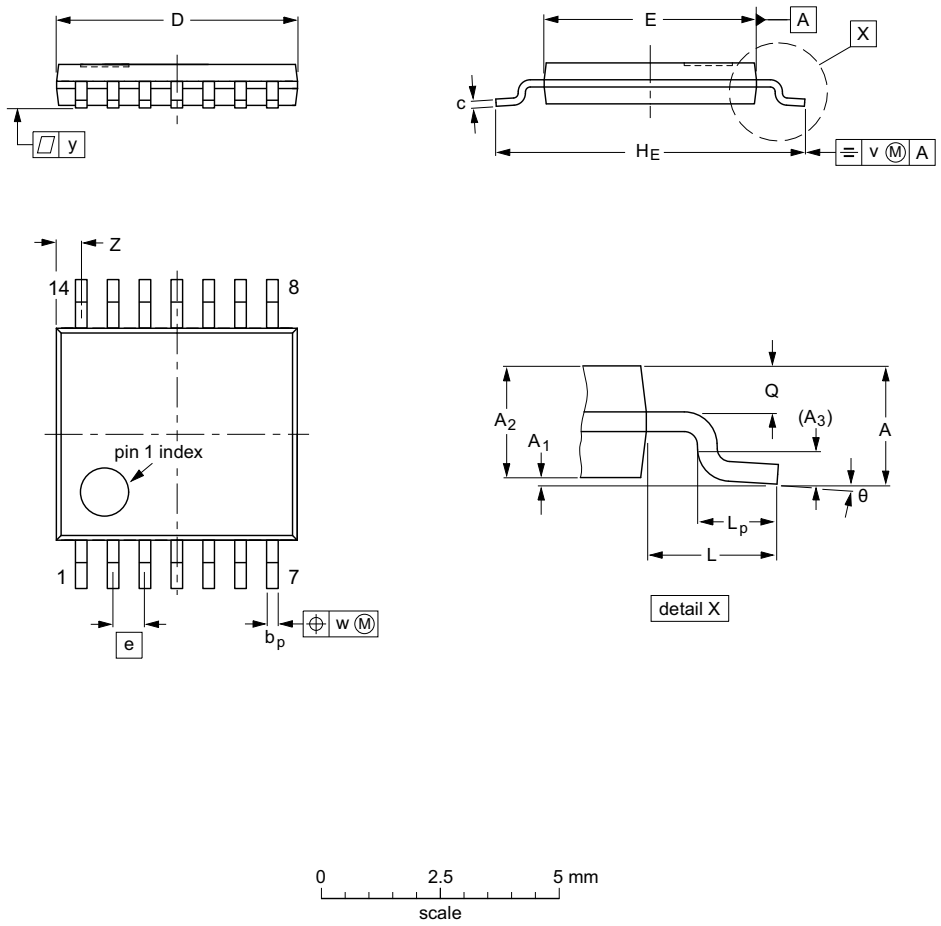

DIMENSIONS (mm are the original dimensions)

UNIT	A max.	A_1	A_2	A_3	b_p	c	D (1)	E (2)	e	H_E	L	L_p	Q	v	w	y	Z (1)	θ
mm	1.1	0.15 0.05	0.95 0.80	0.25	0.30 0.19	0.2 0.1	5.1 4.9	4.5 4.3	0.65	6.6 6.2	1	0.75 0.50	0.4 0.3	0.2	0.13	0.1	0.72 0.38	8° 0°

Notes

1. Plastic or metal protrusions of 0.15 mm maximum per side are not included.
2. Plastic interlead protrusions of 0.25 mm maximum per side are not included.

OUTLINE VERSION	REFERENCES				EUROPEAN PROJECTION	ISSUE DATE
	IEC	JEDEC	JEITA			
SOT402-1		MO-153				~~99-12-27~~ 03-02-18

Fig 10. Package outline SOT402-1 (TSSOP14)

All information provided in this document is subject to legal disclaimers.

© Nexperia B.V. 2017. All rights reserved

13. Abbreviations

Table 9. Abbreviations

Acronym	Description
BiCMOS	Bipolar Complementary Metal-Oxide Semiconductor
DUT	Device Under Test
ESD	ElectroStatic Discharge
HBM	Human Body Model
MM	Machine Model

14. Revision history

Table 10. Revision history

Document ID	Release date	Data sheet status	Change notice	Supersedes
74ABT00 v.3	20160811	Product data sheet	-	74ABT00 v.2
Modifications:	• The format of this data sheet has been redesigned to comply with the new identity guidelines of NXP Semiconductors. • Legal texts have been adapted to the new company name where appropriate.			
74ABT00 v.2	19950918	Product specification	-	-

All information provided in this document is subject to legal disclaimers.

© Nexperia B.V. 2017. All rights reserved

15. Legal information

15.1 Data sheet status

Document status[1][2]	Product status[3]	Definition
Objective [short] data sheet	Development	This document contains data from the objective specification for product development.
Preliminary [short] data sheet	Qualification	This document contains data from the preliminary specification.
Product [short] data sheet	Production	This document contains the product specification.

[1] Please consult the most recently issued document before initiating or completing a design.

[2] The term 'short data sheet' is explained in section "Definitions".

[3] The product status of device(s) described in this document may have changed since this document was published and may differ in case of multiple devices. The latest product status information is available on the Internet at URL http://www.nexperia.com.

15.2 Definitions

Draft — The document is a draft version only. The content is still under internal review and subject to formal approval, which may result in modifications or additions. Nexperia does not give any representations or warranties as to the accuracy or completeness of information included herein and shall have no liability for the consequences of use of such information.

Short data sheet — A short data sheet is an extract from a full data sheet with the same product type number(s) and title. A short data sheet is intended for quick reference only and should not be relied upon to contain detailed and full information. For detailed and full information see the relevant full data sheet, which is available on request via the local Nexperia sales office. In case of any inconsistency or conflict with the short data sheet, the full data sheet shall prevail.

Product specification — The information and data provided in a Product data sheet shall define the specification of the product as agreed between Nexperia and its customer, unless Nexperia and customer have explicitly agreed otherwise in writing. In no event however, shall an agreement be valid in which the Nexperia product is deemed to offer functions and qualities beyond those described in the Product data sheet.

15.3 Disclaimers

Limited warranty and liability — Information in this document is believed to be accurate and reliable. However, Nexperia does not give any representations or warranties, expressed or implied, as to the accuracy or completeness of such information and shall have no liability for the consequences of use of such information. Nexperia takes no responsibility for the content in this document if provided by an information source outside of Nexperia.

In no event shall Nexperia be liable for any indirect, incidental, punitive, special or consequential damages (including - without limitation - lost profits, lost savings, business interruption, costs related to the removal or replacement of any products or rework charges) whether or not such damages are based on tort (including negligence), warranty, breach of contract or any other legal theory.

Notwithstanding any damages that customer might incur for any reason whatsoever, Nexperia's aggregate and cumulative liability towards customer for the products described herein shall be limited in accordance with the *Terms and conditions of commercial sale* of Nexperia.

Right to make changes — Nexperia reserves the right to make changes to information published in this document, including without limitation specifications and product descriptions, at any time and without notice. This document supersedes and replaces all information supplied prior to the publication hereof.

Suitability for use — Nexperia products are not designed, authorized or warranted to be suitable for use in life support, life-critical or safety-critical systems or equipment, nor in applications where failure or malfunction of a Nexperia product can reasonably be expected to result in personal injury, death or severe property or environmental damage. Nexperia and its suppliers accept no liability for inclusion and/or use of Nexperia products in such equipment or applications and therefore such inclusion and/or use is at the customer's own risk.

Applications — Applications that are described herein for any of these products are for illustrative purposes only. Nexperia makes no representation or warranty that such applications will be suitable for the specified use without further testing or modification.

Customers are responsible for the design and operation of their applications and products using Nexperia products, and Nexperia accepts no liability for any assistance with applications or customer product design. It is customer's sole responsibility to determine whether the Nexperia product is suitable and fit for the customer's applications and products planned, as well as for the planned application and use of customer's third party customer(s). Customers should provide appropriate design and operating safeguards to minimize the risks associated with their applications and products.

Nexperia does not accept any liability related to any default, damage, costs or problem which is based on any weakness or default in the customer's applications or products, or the application or use by customer's third party customer(s). Customer is responsible for doing all necessary testing for the customer's applications and products using Nexperia products in order to avoid a default of the applications and the products or of the application or use by customer's third party customer(s). Nexperia does not accept any liability in this respect.

Limiting values — Stress above one or more limiting values (as defined in the Absolute Maximum Ratings System of IEC 60134) will cause permanent damage to the device. Limiting values are stress ratings only and (proper) operation of the device at these or any other conditions above those given in the Recommended operating conditions section (if present) or the Characteristics sections of this document is not warranted. Constant or repeated exposure to limiting values will permanently and irreversibly affect the quality and reliability of the device.

Terms and conditions of commercial sale — Nexperia products are sold subject to the general terms and conditions of commercial sale, as published at http://www.nexperia.com/profile/terms, unless otherwise agreed in a valid written individual agreement. In case an individual agreement is concluded only the terms and conditions of the respective agreement shall apply. Nexperia hereby expressly objects to applying the customer's general terms and conditions with regard to the purchase of Nexperia products by customer.

No offer to sell or license — Nothing in this document may be interpreted or construed as an offer to sell products that is open for acceptance or the grant, conveyance or implication of any license under any copyrights, patents or other industrial or intellectual property rights.

All information provided in this document is subject to legal disclaimers.

© Nexperia B.V. 2017. All rights reserved

Export control — This document as well as the item(s) described herein may be subject to export control regulations. Export might require a prior authorization from competent authorities.

Non-automotive qualified products — Unless this data sheet expressly states that this specific Nexperia product is automotive qualified, the product is not suitable for automotive use. It is neither qualified nor tested in accordance with automotive testing or application requirements. Nexperia accepts no liability for inclusion and/or use of non-automotive qualified products in automotive equipment or applications.

In the event that customer uses the product for design-in and use in automotive applications to automotive specifications and standards, customer (a) shall use the product without Nexperia's warranty of the product for such automotive applications, use and specifications, and (b) whenever customer uses the product for automotive applications beyond Nexperia's specifications such use shall be solely at customer's own risk, and (c) customer fully indemnifies Nexperia for any liability, damages or failed product claims resulting from customer design and use of the product for automotive applications beyond Nexperia's standard warranty and Nexperia's product specifications.

Translations — A non-English (translated) version of a document is for reference only. The English version shall prevail in case of any discrepancy between the translated and English versions.

15.4 Trademarks

Notice: All referenced brands, product names, service names and trademarks are the property of their respective owners.

16. Contact information

For more information, please visit: **http://www.nexperia.com**

For sales office addresses, please send an email to: **salesaddresses@nexperia.com**

All information provided in this document is subject to legal disclaimers.

© Nexperia B.V. 2017. All rights reserved

17. Contents

1 General description 1
2 Features and benefits 1
3 Ordering information 1
4 Functional diagram 2
5 Pinning information 2
5.1 Pinning 2
5.2 Pin description 2
6 Functional description 3
7 Limiting values 3
8 Recommended operating conditions 3
9 Static characteristics 4
10 Dynamic characteristics 4
11 Waveforms 5
12 Package outline 6
13 Abbreviations 9
14 Revision history 9
15 Legal information 10
15.1 Data sheet status 10
15.2 Definitions 10
15.3 Disclaimers 10
15.4 Trademarks 11
16 Contact information 11
17 Contents 12

© **Nexperia B.V. 2017. All rights reserved**

For more information, please visit: http://www.nexperia.com
For sales office addresses, please send an email to: salesaddresses@nexperia.com
Date of release: 11 August 2016

Компания «ЭлектроПласт» предлагает заключение долгосрочных отношений при поставках импортных электронных компонентов на взаимовыгодных условиях!

Наши преимущества:

- Оперативные поставки широкого спектра электронных компонентов отечественного и импортного производства напрямую от производителей и с крупнейших мировых складов;
- Поставка более 17-ти миллионов наименований электронных компонентов;
- Поставка сложных, дефицитных, либо снятых с производства позиций;
- Оперативные сроки поставки под заказ (от 5 рабочих дней);
- Экспресс доставка в любую точку России;
- Техническая поддержка проекта, помощь в подборе аналогов, поставка прототипов;
- Система менеджмента качества сертифицирована по Международному стандарту ISO 9001;
- Лицензия ФСБ на осуществление работ с использованием сведений, составляющих государственную тайну;
- Поставка специализированных компонентов (Xilinx, Altera, Analog Devices, Intersil, Interpoint, Microsemi, Aeroflex, Peregrine, Syfer, Eurofarad, Texas Instrument, Miteq, Cobham, E2V, MA-COM, Hittite, Mini-Circuits,General Dynamics и др.);

Помимо этого, одним из направлений компании «ЭлектроПласт» является направление «Источники питания». Мы предлагаем Вам помощь Конструкторского отдела:

- Подбор оптимального решения, техническое обоснование при выборе компонента;
- Подбор аналогов;
- Консультации по применению компонента;
- Поставка образцов и прототипов;
- Техническая поддержка проекта;
- Защита от снятия компонента с производства.

Как с нами связаться

Телефон: 8 (812) 309 58 32 (многоканальный)
Факс: 8 (812) 320-02-42
Электронная почта: org@eplast1.ru
Адрес: 198099, г. Санкт-Петербург, ул. Калинина, дом 2, корпус 4, литера А.