# CMOS ASYNCHRONOUS FIFO
# 256 x 9, 512 x 9 and 1,024 x 9

***IDT7200L***
***IDT7201LA***
***IDT7202LA***

## FEATURES:

- First-In/First-Out dual-port memory
- 256 x 9 organization (IDT7200)
- 512 x 9 organization (IDT7201)
- 1,024 x 9 organization (IDT7202)
- Low power consumption
  - *— Active: 440mW (max.)*
  - *—Power-down: 28mW (max.)*
- Ultra high speed—12ns access time
- Asynchronous and simultaneous read and write
- Fully expandable by both word depth and/or bit width
- 720x family is pin and functionally compatible from 256 x 9 to 64k x 9
- Status Flags: Empty, Half-Full, Full
- Auto-retransmit capability
- High-performance CEMOS™ technology
- Military product compliant to MIL-STD-883, Class B
- Standard Military Drawing #5962-87531, 5962-89666, 5962-89863 and 5962-89536 are listed on this function
- Dual versions available in the TSSOP package. For more information, see IDT7280/7281/7282 data sheet
  - IDT7280 = 2 x IDT7200
  - IDT7281 = 2 x IDT7201
  - IDT7282 = 2 x IDT7202
- Industrial temperature range (–40°C to +85°C) is available (plastic packages only)
- Green parts available, see ordering information

## DESCRIPTION:

The IDT7200/7201/7202 are dual-port memories that load and empty data on a first-in/first-out basis. The devices use Full and Empty flags to prevent data overflow and underflow and expansion logic to allow for unlimited expansion capability in both word size and depth.

The reads and writes are internally sequential through the use of ring pointers, with no address information required to load and unload data. Data is toggled in and out of the devices through the use of the Write ($\overline{W}$) and Read ($\overline{R}$) pins.

The devices utilize a 9-bit wide data array to allow for control and parity bits at the user's option. This feature is especially useful in data communications applications where it is necessary to use a parity bit for transmission/reception error checking. It also features a Retransmit ($\overline{RT}$) capability that allows for reset of the read pointer to its initial position when $\overline{RT}$ is pulsed LOW to allow for retransmission from the beginning of data. A Half-Full Flag is available in the single device mode and width expansion modes.

These FIFOs are fabricated using high-speed CMOS technology. They are designed for those applications requiring asynchronous and simultaneous read/writes in multiprocessing and rate buffer applications. Military grade product is manufactured in compliance with MIL-STD-883, Class B.

## FUNCTIONAL BLOCK DIAGRAM

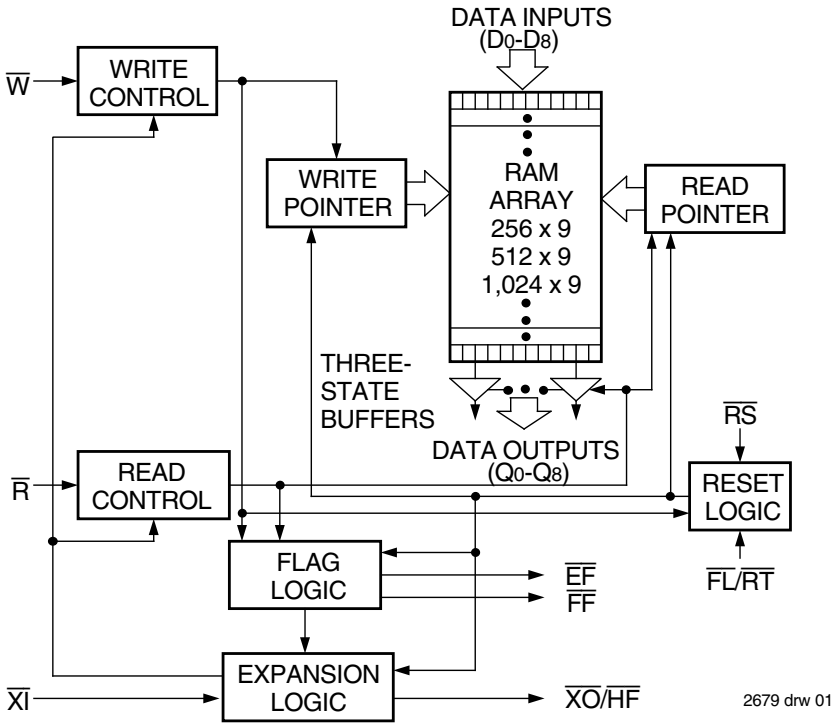


IDT and the IDT logo are registered trademarks of Integrated Device Technology, Inc.


©2012 Integrated Device Technology, Inc. All rights reserved. Product specifications subject to change without notice.

## PIN CONFIGURATIONS

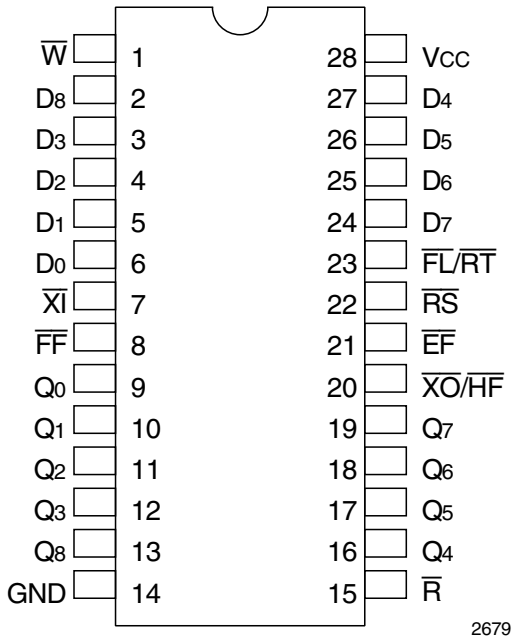


2679 drw 02a

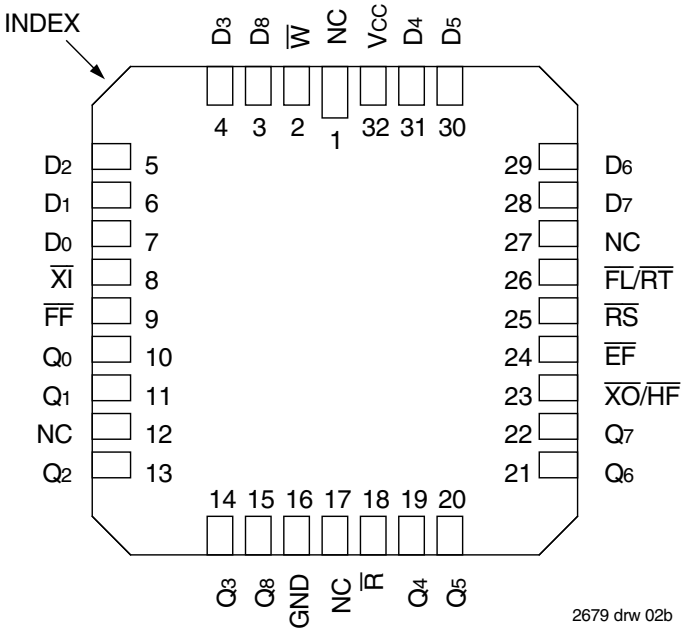


2679 drw 02b

| Package Type | Reference Identifier | Order Code |
|---|---|---|
| PLASTIC DIP(1) | P28-1 | P |
| PLASTIC THIN DIP | P28-2 | TP |
| CERDIP(1) | D28-1 | D |
| THIN CERDIP | D28-3 | TD |
| SOIC | SO28-3 | SO |

TOP VIEW

| Package Type | Reference Identifier | Order Code |
|---|---|---|
| LCC(1) | L32- 1 | L |
| PLCC | J32-1 | J |

TOP VIEW

NOTE:
1. The 600-mil-wide DIP (P28-1 and D28-1) and LCC are not available for the IDT7200.

## ABSOLUTE MAXIMUM RATINGS

| Symbol | Rating | Com'l & Ind'l | Mil. | Unit |
|---|---|---|---|---|
| $V_{TERM}$ | Terminal Voltage with Respect to GND | –0.5 to +7.0 | –0.5 to +7.0 | V |
| $T_{STG}$ | Storage Temperature | –55 to +125 | –65 to +155 | °C |
| $I_{OUT}$ | DC Output Current | –50 to +50 | –50 to +50 | mA |

NOTE:
1. Stresses greater than those listed under ABSOLUTE MAXIMUM RATINGS may cause permanent damage to the device. This is a stress rating only and functional operation of the device at these or any other conditions above those indicated in the operational sections of this specification is not implied. Exposure to absolute maximum rating conditions for extended periods may affect reliability.

## RECOMMENDED DC OPERATING CONDITIONS

| Symbol | Parameter | Min. | Typ. | Max. | Unit |
|---|---|---|---|---|---|
| $V_{CC}$ | Supply Voltage Commercial/Industrial/Military | 4.5 | 5.0 | 5.5 | V |
| GND | Supply Voltage | 0 | 0 | 0 | V |
| $V_{IH}$(1) | Input High Voltage Com'l/Ind'l | 2.0 | — | — | V |
| $V_{IH}$(1) | Input High Voltage Military | 2.2 | — | — | V |
| $V_{IL}$(2) | Input Low Voltage Commercial/Industrial/Military | — | — | 0.8 | V |
| $T_A$ | Operating Temperature Commercial | 0 | — | 70 | °C |
| $T_A$ | Operating Temperature Industrial | –40 | — | 85 | °C |
| $T_A$ | Operating Temperature Military | –55 | — | 125 | °C |

NOTES:
1. For $\overline{RT}/\overline{RS}/\overline{XI}$ input, $V_{IH}$ = 2.6V (commercial).
   For $\overline{RT}/\overline{RS}/\overline{XI}$ input, $V_{IH}$ = 2.8V (military).
2. 1.5V undershoots are allowed for 10ns once per cycle.

## DC ELECTRICAL CHARACTERISTICS

(Commercial: $V_{CC}$ = 5V ± 10%, $T_A$ = 0°C to +70°C; Industrial: $V_{CC}$ = 5V ± 10%, $T_A$ = –40°C to +85°C; Military: $V_{CC}$ = 5V ± 10%, $T_A$ = –55°C to +125°C)

| Symbol | Parameter | IDT7200L IDT7201LA IDT7202LA Com'l & Ind'l[1] $t_A$ = 12, 15, 20, 25, 35, 50 ns | | IDT7200L IDT7201LA IDT7202LA Military[2] $t_A$ = 20, 30, 50, 80 ns | | Unit |
|---|---|---|---|---|---|---|
| | | Min. | Max. | Min. | Max. | |
| $I_{LI}$[3] | Input Leakage Current (Any Input) | –1 | 1 | –10 | 10 | µA |
| $I_{LO}$[4] | Output Leakage Current | –10 | 10 | –10 | 10 | µA |
| $V_{OH}$ | Output Logic "1" Voltage $I_{OH}$ = –2mA | 2.4 | — | 2.4 | — | V |
| $V_{OL}$ | Output Logic "0" Voltage $I_{OL}$ = 8mA | — | 0.4 | — | 0.4 | V |
| $I_{CC1}$[5,6,7] | Active Power Supply Current | — | 80 | — | 100 | mA |
| $I_{CC2}$[5,8] | Standby Current ($\overline{R}$=$\overline{W}$=$\overline{RS}$=$\overline{FL}$/$\overline{RT}$=$V_{IH}$) | — | 5 | — | 15 | mA |

NOTES:
1. Industrial temperature range product for the 15ns and 25 ns speed grades are available as a standard device.
2. Military speed grades of 50ns and 80ns are only available for the IDT7201LA.
3. Measurements with 0.4 ≤ $V_{IN}$ ≤ $V_{CC}$.
4. $\overline{R}$ ≥ $V_{IH}$, 0.4 ≤ $V_{OUT}$ ≤ $V_{CC}$.
5. Tested with outputs open ($I_{OUT}$ = 0).
6. Tested at f = 20 MHz.
7. Typical $I_{CC1}$ = 15 + 2*fs + 0.02*$C_L$*fs (in mA) with $V_{CC}$ = 5V, $T_A$ = 25°C, fs = WCLK frequency = RCLK frequency (in MHz, using TTL levels), data switching at fs/2, $C_L$ = capacitive load (in pF).
8. All Inputs = $V_{CC}$ - 0.2V or GND + 0.2V.

## CAPACITANCE ($T_A$ = +25°C, f = 1.0 MHz)

| Symbol | Parameter | Condition | Max. | Unit |
|---|---|---|---|---|
| $C_{IN}$ | Input Capacitance | $V_{IN}$ = 0V | 8 | pF |
| $C_{OUT}$ | Output Capacitance | $V_{OUT}$ = 0V | 8 | pF |

NOTE:
1. Characterized values, not currently tested.

## AC TEST CONDITIONS

| | |
|---|---|
| Input Pulse Levels | GND to 3.0V |
| Input Rise/Fall Times | 5ns |
| Input Timing Reference Levels | 1.5V |
| Output Reference Levels | 1.5V |
| Output Load | See Figure 1 |

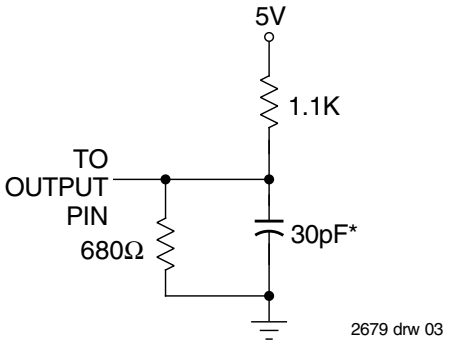


or equivalent circuit

*Figure 1. Output Load*

* Includes scope and jig capacitances.

## AC ELECTRICAL CHARACTERISTICS[1]

(Commercial: $V_{CC}$ = 5V ± 10%, $T_A$ = 0°C to +70°C; Industrial: $V_{CC}$ = 5V ± 10%, $T_A$ = –40°C to +85°C; Military: $V_{CC}$ = 5V ± 10%, $T_A$ = –55°C to +125°C)

| | | Commercial | | Com'l & Ind'l[2] | | Com'l & Mil. | | Com'l & Ind'l[2] | | |
|---|---|---|---|---|---|---|---|---|---|---|
| | | IDT7200L12<br>IDT7201LA12<br>IDT7202LA12 | | IDT7200L15<br>IDT7201LA15<br>IDT7202LA15 | | IDT7200L20<br>IDT7201LA20<br>IDT7202LA20 | | IDT7200L25<br>IDT7201LA25<br>IDT7202LA25 | | |
| Symbol | Parameter | Min. | Max. | Min. | Max. | Min. | Max. | Min. | Max. | Unit |
| $t_S$ | Shift Frequency | — | 50 | — | 40 | — | 33.3 | — | 28.5 | MHz |
| $t_{RC}$ | Read Cycle Time | 20 | — | 25 | — | 30 | — | 35 | — | ns |
| $t_A$ | Access Time | — | 12 | — | 15 | — | 20 | — | 25 | ns |
| $t_{RR}$ | Read Recovery Time | 8 | — | 10 | — | 10 | — | 10 | — | ns |
| $t_{RPW}$ | Read Pulse Width[3] | 12 | — | 15 | — | 20 | — | 25 | — | ns |
| $t_{RLZ}$ | Read Pulse Low to Data Bus at Low Z[4] | 3 | — | 3 | — | 3 | — | 3 | — | ns |
| $t_{WLZ}$ | Write Pulse High to Data Bus at Low Z[4,5] | 5 | — | 5 | — | 5 | — | 5 | — | ns |
| $t_{DV}$ | Data Valid from Read Pulse High | 5 | — | 5 | — | 5 | — | 5 | — | ns |
| $t_{RHZ}$ | Read Pulse High to Data Bus at High Z[4] | — | 12 | — | 15 | — | 15 | — | 18 | ns |
| $t_{WC}$ | Write Cycle Time | 20 | — | 25 | — | 30 | — | 35 | — | ns |
| $t_{WPW}$ | Write Pulse Width[3] | 12 | — | 15 | — | 20 | — | 25 | — | ns |
| $t_{WR}$ | Write Recovery Time | 8 | — | 10 | — | 10 | — | 10 | — | ns |
| $t_{DS}$ | Data Set-up Time | 9 | — | 11 | — | 12 | — | 15 | — | ns |
| $t_{DH}$ | Data Hold Time | 0 | — | 0 | — | 0 | — | 0 | — | ns |
| $t_{RSC}$ | Reset Cycle Time | 20 | — | 25 | — | 30 | — | 35 | — | ns |
| $t_{RS}$ | Reset Pulse Width[3] | 12 | — | 15 | — | 20 | — | 25 | — | ns |
| $t_{RSS}$ | Reset Set-up Time[4] | 12 | — | 15 | — | 20 | — | 25 | — | ns |
| $t_{RSR}$ | Reset Recovery Time | 8 | — | 10 | — | 10 | — | 10 | — | ns |
| $t_{RTC}$ | Retransmit Cycle Time | 20 | — | 25 | — | 30 | — | 35 | — | ns |
| $t_{RT}$ | Retransmit Pulse Width[3] | 12 | — | 15 | — | 20 | — | 25 | — | ns |
| $t_{RTS}$ | Retransmit Set-up Time[4] | 12 | — | 15 | — | 20 | — | 25 | — | ns |
| $t_{RTR}$ | Retransmit Recovery Time | 8 | — | 10 | — | 10 | — | 10 | — | ns |
| $t_{EFL}$ | Reset to Empty Flag Low | — | 12 | — | 25 | — | 30 | — | 35 | ns |
| $t_{HFH,FFH}$ | Reset to Half-Full and Full Flag High | — | 17 | — | 25 | — | 30 | — | 35 | ns |
| $t_{RTF}$ | Retransmit Low to Flags Valid | — | 20 | — | 25 | — | 30 | — | 35 | ns |
| $t_{REF}$ | Read Low to Empty Flag Low | — | 12 | — | 15 | — | 20 | — | 25 | ns |
| $t_{RFF}$ | Read High to Full Flag High | — | 14 | — | 15 | — | 20 | — | 25 | ns |
| $t_{RPE}$ | Read Pulse Width after $\overline{EF}$ High | 12 | — | 15 | — | 20 | — | 25 | — | ns |
| $t_{WEF}$ | Write High to Empty Flag High | — | 12 | — | 15 | — | 20 | — | 25 | ns |
| $t_{WFF}$ | Write Low to Full Flag Low | — | 14 | — | 15 | — | 20 | — | 25 | ns |
| $t_{WHF}$ | Write Low to Half-Full Flag Low | — | 17 | — | 25 | — | 30 | — | 35 | ns |
| $t_{RHF}$ | Read High to Half-Full Flag High | — | 17 | — | 25 | — | 30 | — | 35 | ns |
| $t_{WPF}$ | Write Pulse Width after $\overline{FF}$ High | 12 | — | 15 | — | 20 | — | 25 | — | ns |
| $t_{XOL}$ | Read/Write to $\overline{XO}$ Low | — | 12 | — | 15 | — | 20 | — | 25 | ns |
| $t_{XOH}$ | Read/Write to $\overline{XO}$ High | — | 12 | — | 15 | — | 20 | — | 25 | ns |
| $t_{XI}$ | $\overline{XI}$ Pulse Width[3] | 12 | — | 15 | — | 20 | — | 25 | — | ns |
| $t_{XIR}$ | $\overline{XI}$ Recovery Time | 8 | — | 10 | — | 10 | — | 10 | — | ns |
| $t_{XIS}$ | $\overline{XI}$ Set-up Time | 8 | — | 10 | — | 10 | — | 10 | — | ns |

NOTES:
1. Timings referenced as in AC Test Conditions.
2. Industrial temperature range product for 15ns and 25ns speed grades are available as a standard device.
3. Pulse widths less than minimum value are not allowed.
4. Values guaranteed by design, not currently tested.
5. Only applies to read data flow-through mode

## AC ELECTRICAL CHARACTERISTICS[1] (Continued)

(Commercial: $V_{CC}$ = 5V ± 10%, $T_A$ = 0°C to +70°C; Industrial: $V_{CC}$ = 5V ± 10%, $T_A$ = –40°C to +85°C; Military: $V_{CC}$ = 5V ± 10%, $T_A$ = –55°C to +125°C)

| | | Military | | Commercial | | Com'l & Mil.[2] | | Military[2] | | |
|---|---|---|---|---|---|---|---|---|---|---|
| | | IDT7200L30<br>IDT7201LA30<br>IDT7202LA30 | | IDT7200L35<br>IDT7201LA35<br>IDT7202LA35 | | IDT7200L50<br>IDT7201LA50<br>IDT7202LA50 | | IDT7201LA80 | | |
| Symbol | Parameter | Min. | Max. | Min. | Max. | Min. | Max. | Min. | Max. | Unit |
| $t_S$ | Shift Frequency | — | 25 | — | 22.2 | — | 15 | — | 10 | MHz |
| $t_{RC}$ | Read Cycle Time | 40 | — | 45 | — | 65 | — | 100 | — | ns |
| $t_A$ | Access Time | — | 30 | — | 35 | — | 50 | — | 80 | ns |
| $t_{RR}$ | Read Recovery Time | 10 | — | 10 | — | 15 | — | 20 | — | ns |
| $t_{RPW}$ | Read Pulse Width[3] | 30 | — | 35 | — | 50 | — | 80 | — | ns |
| $t_{RLZ}$ | Read Pulse Low to Data Bus at Low Z[4] | 3 | — | 3 | — | 3 | — | 3 | — | ns |
| $t_{WLZ}$ | Write Pulse High to Data Bus at Low Z[4,5] | 5 | — | 5 | — | 5 | — | 5 | — | ns |
| $t_{DV}$ | Data Valid from Read Pulse High | 5 | — | 5 | — | 5 | — | 5 | — | ns |
| $t_{RHZ}$ | Read Pulse High to Data Bus at High Z[4] | — | 20 | — | 20 | — | 30 | — | 30 | ns |
| $t_{WC}$ | Write Cycle Time | 40 | — | 45 | — | 65 | — | 100 | — | ns |
| $t_{WPW}$ | Write Pulse Width[3] | 30 | — | 35 | — | 50 | — | 80 | — | ns |
| $t_{WR}$ | Write Recovery Time | 10 | — | 10 | — | 15 | — | 20 | — | ns |
| $t_{DS}$ | Data Set-up Time | 18 | — | 18 | — | 30 | — | 40 | — | ns |
| $t_{DH}$ | Data Hold Time | 0 | — | 0 | — | 5 | — | 10 | — | ns |
| $t_{RSC}$ | Reset Cycle Time | 40 | — | 45 | — | 65 | — | 100 | — | ns |
| $t_{RS}$ | Reset Pulse Width[3] | 30 | — | 35 | — | 50 | — | 80 | — | ns |
| $t_{RSS}$ | Reset Set-up Time[4] | 30 | — | 35 | — | 50 | — | 80 | — | ns |
| $t_{RSR}$ | Reset Recovery Time | 10 | — | 10 | — | 15 | — | 20 | — | ns |
| $t_{RTC}$ | Retransmit Cycle Time | 40 | — | 45 | — | 65 | — | 100 | — | ns |
| $t_{RT}$ | Retransmit Pulse Width[3] | 30 | — | 35 | — | 50 | — | 80 | — | ns |
| $t_{RTS}$ | Retransmit Set-up Time[4] | 30 | — | 35 | — | 50 | — | 80 | — | ns |
| $t_{RTR}$ | Retransmit Recovery Time | 10 | — | 10 | — | 15 | — | 20 | — | ns |
| $t_{EFL}$ | Reset to Empty Flag Low | — | 40 | — | 45 | — | 65 | — | 100 | ns |
| $t_{HFH,FFH}$ | Reset to Half-Full and Full Flag High | — | 40 | — | 45 | — | 65 | — | 100 | ns |
| $t_{RTF}$ | Retransmit Low to Flags Valid | — | 40 | — | 45 | — | 65 | — | 100 | ns |
| $t_{REF}$ | Read Low to Empty Flag Low | — | 30 | — | 30 | — | 45 | — | 60 | ns |
| $t_{RFF}$ | Read High to Full Flag High | — | 30 | — | 30 | — | 45 | — | 60 | ns |
| $t_{RPE}$ | Read Pulse Width after $\overline{EF}$ High | 30 | — | 35 | — | 50 | — | 80 | — | ns |
| $t_{WEF}$ | Write High to Empty Flag High | — | 30 | — | 30 | — | 45 | — | 60 | ns |
| $t_{WFF}$ | Write Low to Full Flag Low | — | 30 | — | 30 | — | 45 | — | 60 | ns |
| $t_{WHF}$ | Write Low to Half-Full Flag Low | — | 40 | — | 45 | — | 65 | — | 100 | ns |
| $t_{RHF}$ | Read High to Half-Full Flag High | — | 40 | — | 45 | — | 65 | — | 100 | ns |
| $t_{WPF}$ | Write Pulse Width after $\overline{FF}$ High | 30 | — | 35 | — | 50 | — | 80 | — | ns |
| $t_{XOL}$ | Read/Write to $\overline{XO}$ Low | — | 30 | — | 35 | — | 50 | — | 80 | ns |
| $t_{XOH}$ | Read/Write to $\overline{XO}$ High | — | 30 | — | 35 | — | 50 | — | 80 | ns |
| $t_{XI}$ | $\overline{XI}$ Pulse Width[3] | 30 | — | 35 | — | 50 | — | 80 | — | ns |
| $t_{XIR}$ | $\overline{XI}$ Recovery Time | 10 | — | 10 | — | 10 | — | 10 | — | ns |
| $t_{XIS}$ | $\overline{XI}$ Set-up Time | 10 | — | 10 | — | 15 | — | 15 | — | ns |

NOTES:
1. Timings referenced as in AC Test Conditions
2. Military speed grades of 50ns and 80ns are only available for IDT7201LA.
3. Pulse widths less than minimum value are not allowed.
4. Values guaranteed by design, not currently tested.
5. Only applies to read data flow-through mode.

# SIGNAL DESCRIPTIONS

## INPUTS:

DATA IN ($D_0$ – $D_8$)

Data inputs for 9-bit wide data.

## CONTROLS:

RESET ($\overline{RS}$)

Reset is accomplished whenever the Reset ($\overline{RS}$) input is taken to a LOW state. During reset, both internal read and write pointers are set to the first location. A reset is required after power up before a write operation can take place. Both the Read Enable ($\overline{R}$) and Write Enable ($\overline{W}$) inputs must be in the HIGH state during the window shown in Figure 2, (i.e., $t_{RSS}$ before the rising edge of $\overline{RS}$) and should not change until $t_{RSR}$ after the rising edge of $\overline{RS}$. Half-Full Flag ($\overline{HF}$) will be reset to HIGH after Reset ($\overline{RS}$).

WRITE ENABLE ($\overline{W}$)

A write cycle is initiated on the falling edge of this input if the Full Flag ($\overline{FF}$) is not set. Data set-up and hold times must be adhered to with respect to the rising edge of the Write Enable ($\overline{W}$). Data is stored in the RAM array sequentially and independently of any on-going read operation.

After half of the memory is filled and at the falling edge of the next write operation, the Half-Full Flag ($\overline{HF}$) will be set to LOW and will remain set until the difference between the write pointer and read pointer is less than or equal to one half of the total memory of the device. The Half-Full Flag ($\overline{HF}$) is then reset by the rising edge of the read operation.

To prevent data overflow, the Full Flag ($\overline{FF}$) will go LOW, inhibiting further write operations. Upon the completion of a valid read operation, the Full Flag ($\overline{FF}$) will go HIGH after $t_{RFF}$, allowing a valid write to begin. When the FIFO is full, the internal write pointer is blocked from $\overline{W}$, so external changes in $\overline{W}$ will not affect the FIFO when it is full.

READ ENABLE ($\overline{R}$)

A read cycle is initiated on the falling edge of the Read Enable ($\overline{R}$) provided the Empty Flag ($\overline{EF}$) is not set. The data is accessed on a First-In/First-Out basis, independent of any ongoing write operations. After Read Enable ($\overline{R}$) goes HIGH, the Data Outputs ($Q_0$ – $Q_8$) will return to a high impedance condition until the next Read operation. When all data has been read from the FIFO, the Empty Flag ($\overline{EF}$) will go LOW, allowing the "final" read cycle but inhibiting further read operations with the data outputs remaining in a high impedance state. Once a valid write operation has been accomplished, the Empty Flag ($\overline{EF}$) will go HIGH after $t_{WEF}$ and a valid Read can then begin. When the FIFO is empty, the internal read pointer is blocked from $\overline{R}$ so external changes in $\overline{R}$ will not affect the FIFO when it is empty.

FIRST LOAD/RETRANSMIT ($\overline{FL}/\overline{RT}$)

This is a dual-purpose input. In the Depth Expansion Mode, this pin is grounded to indicate that it is the first loaded (see Operating Modes). In the Single Device Mode, this pin acts as the retransmit input. The Single Device Mode is initiated by grounding the Expansion In ($\overline{XI}$).

The IDT7200/7201A/7202A can be made to retransmit data when the Retransmit Enable control ($\overline{RT}$) input is pulsed LOW. A retransmit operation will set the internal read pointer to the first location and will not affect the write pointer. Read Enable ($\overline{R}$) and Write Enable ($\overline{W}$) must be in the HIGH state during retransmit. This feature is useful when less than 256/512/1,024 writes are performed between resets. The retransmit feature is not compatible with the Depth Expansion Mode and will affect the Half-Full Flag ($\overline{HF}$), depending on the relative locations of the read and write pointers.

EXPANSION IN ($\overline{XI}$)

This input is a dual-purpose pin. Expansion In ($\overline{XI}$) is grounded to indicate an operation in the single device mode. Expansion In ($\overline{XI}$) is connected to Expansion Out ($\overline{XO}$) of the previous device in the Depth Expansion or Daisy Chain Mode.

## OUTPUTS:

FULL FLAG ($\overline{FF}$)

The Full Flag ($\overline{FF}$) will go LOW, inhibiting further write operation, when the write pointer is one location less than the read pointer, indicating that the device is full. If the read pointer is not moved after Reset ($\overline{RS}$), the Full-Flag ($\overline{FF}$) will go LOW after 256 writes for IDT7200, 512 writes for the IDT7201A and 1,024 writes for the IDT7202A.

EMPTY FLAG ($\overline{EF}$)

The Empty Flag ($\overline{EF}$) will go LOW, inhibiting further read operations, when the read pointer is equal to the write pointer, indicating that the device is empty.

EXPANSION OUT/HALF-FULL FLAG ($\overline{XO}/\overline{HF}$)

This is a dual-purpose output. In the single device mode, when Expansion In ($\overline{XI}$) is grounded, this output acts as an indication of a half-full memory.

After half of the memory is filled and at the falling edge of the next write operation, the Half-Full Flag ($\overline{HF}$) will be set LOW and will remain set until the difference between the write pointer and read pointer is less than or equal to one half of the total memory of the device. The Half-Full Flag ($\overline{HF}$) is then reset by using rising edge of the read operation.

In the Depth Expansion Mode, Expansion In ($\overline{XI}$) is connected to Expansion Out ($\overline{XO}$) of the previous device. This output acts as a signal to the next device in the Daisy Chain by providing a pulse to the next device when the previous device reaches the last location of memory.

DATA OUTPUTS ($Q_0$ – $Q_8$)

Data outputs for 9-bit wide data. This data is in a high impedance condition whenever Read ($\overline{R}$) is in a HIGH state.

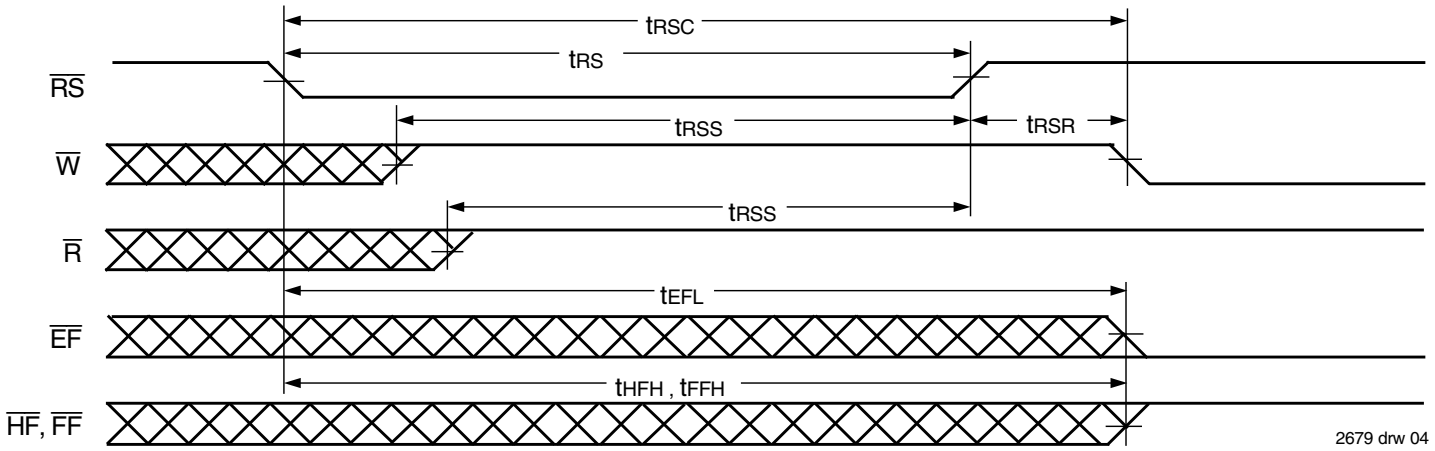


NOTES:
1. $\overline{EF}$, $\overline{FF}$, $\overline{HF}$ may change status during Reset, but flags will be valid at $t_{RSC}$.
2. $\overline{W}$ and $\overline{R}$ = $V_{IH}$ around the rising edge of $\overline{RS}$.

*Figure 2. Reset*

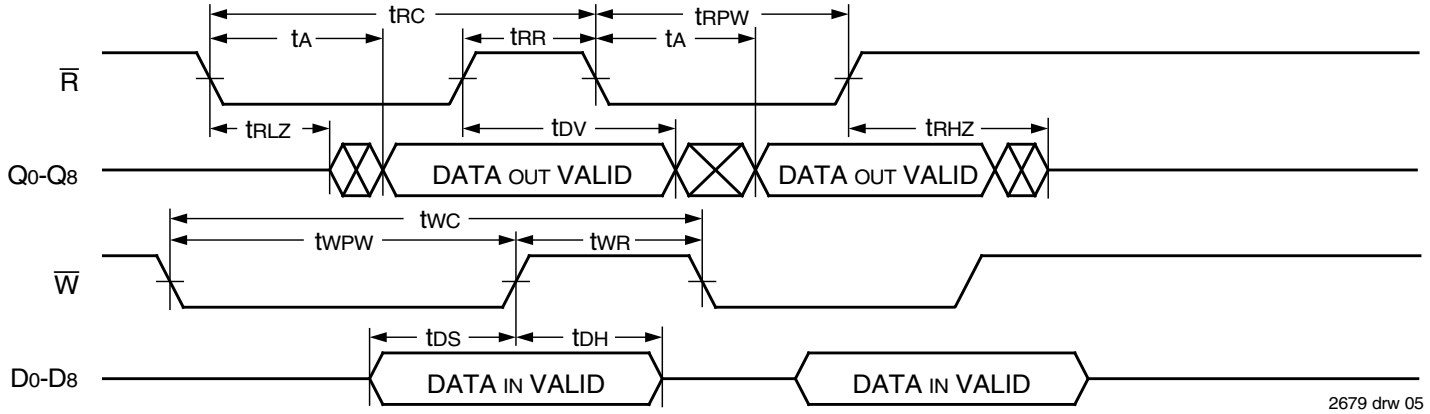


*Figure 3. Asynchronous Write and Read Operation*

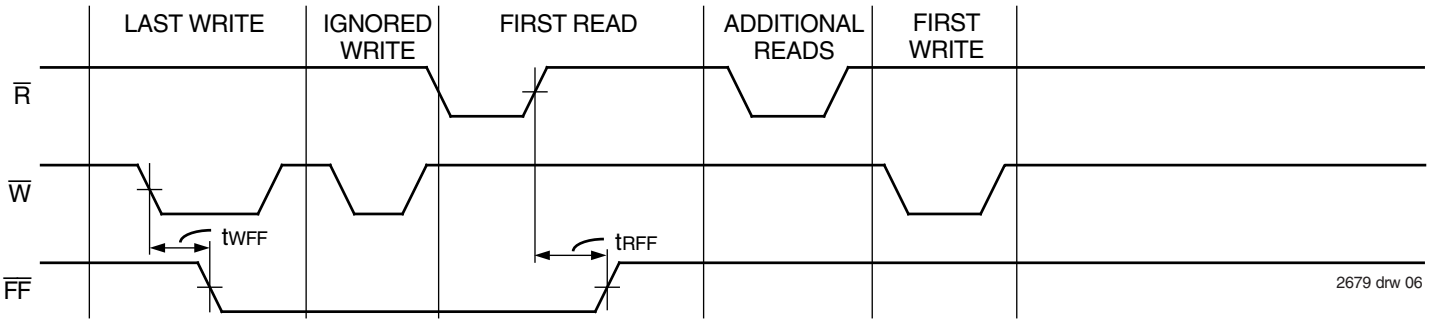


*Figure 4. Full Flag From Last Write to First Read*

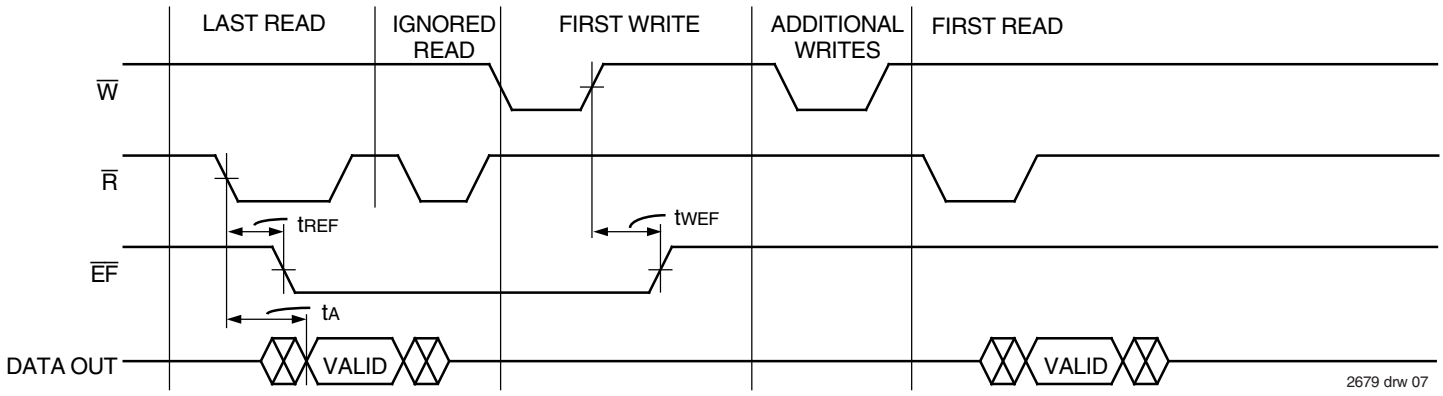


*Figure 5. Empty Flag From Last Read to First Write*

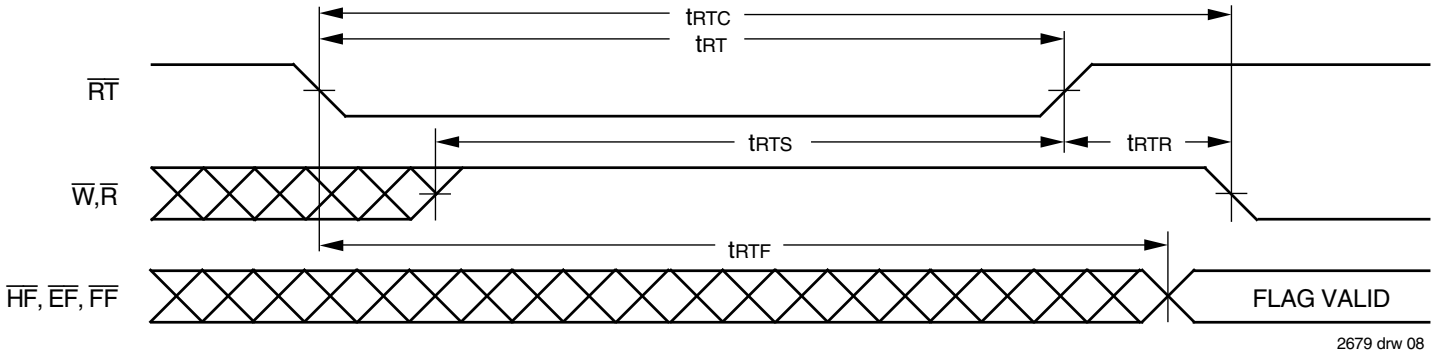


*Figure 6. Retransmit*

*Figure 7. Minimum Timing for an Empty Flag Coincident Read Pulse*

*Figure 8. Minimum Timing for a Full Flag Coincident Write Pulse*

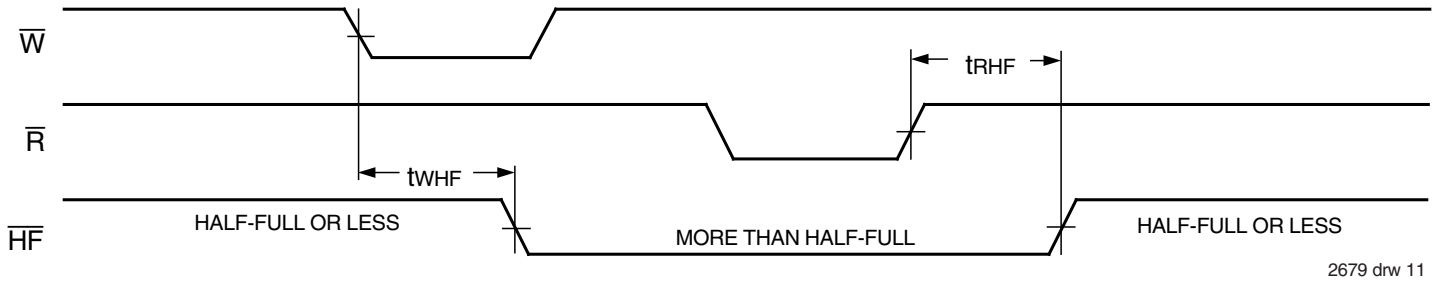


*Figure 9. Half-Full Flag Timing*

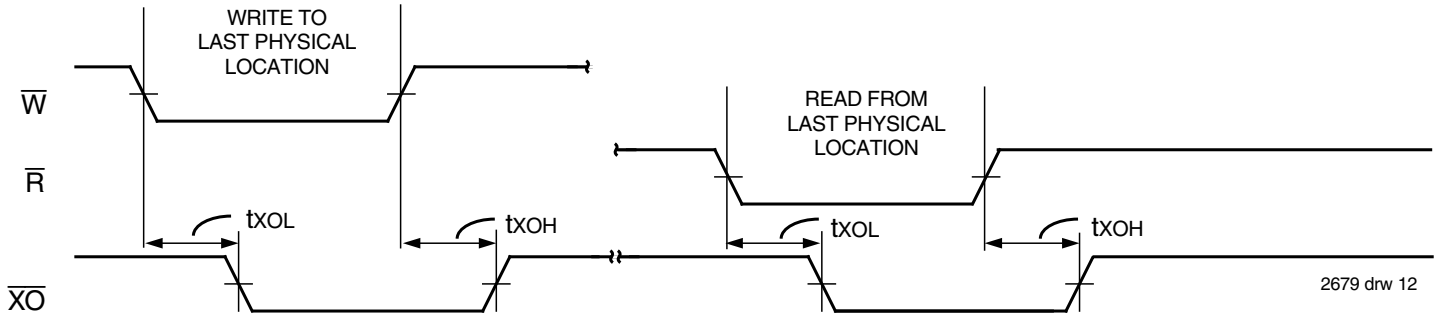


*Figure 10. Expansion Out*

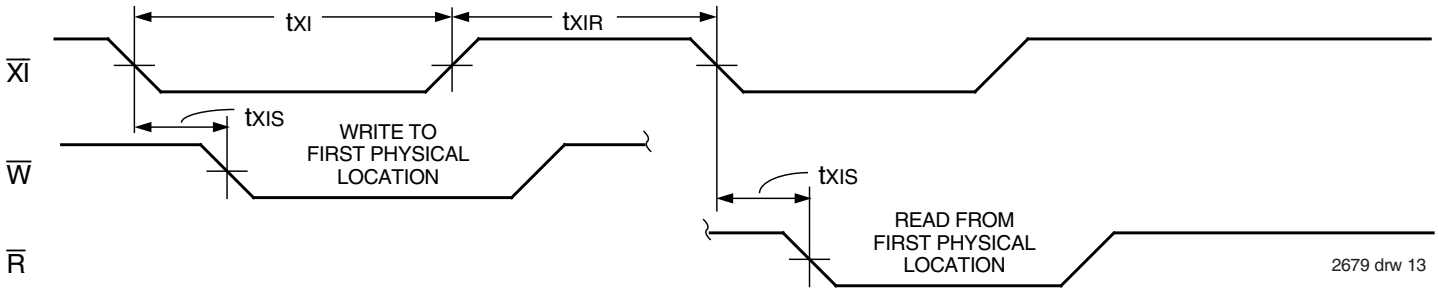


*Figure 11. Expansion In*

## OPERATING MODES:

Care must be taken to assure that the appropriate flag is monitored by each system (i.e. $\overline{FF}$ is monitored on the device where $\overline{W}$ is used; $\overline{EF}$ is monitored on the device where $\overline{R}$ is used). For additional information, refer to Tech Note 8: *Operating FIFOs on Full and Empty Boundary Conditions* and Tech Note 6: *Designing with FIFOs.*

### SINGLE DEVICE MODE

A single IDT7200/7201A/7202A may be used when the application requirements are for 256/512/1,024 words or less. These devices are in a Single Device Configuration when the Expansion In ($\overline{XI}$) control input is grounded (see Figure 12).

### DEPTH EXPANSION

The IDT7200/7201A/7202A can easily be adapted to applications when the requirements are for greater than 256/512/1,024 words. Figure 14 demonstrates Depth Expansion using three IDT7200/7201A/7202As. Any depth can be attained by adding additional IDT7200/7201A/7202As. These FIFOs operate in the Depth Expansion mode when the following conditions are met:

1. The first device must be designated by grounding the First Load ($\overline{FL}$) control input.
2. All other devices must have $\overline{FL}$ in the HIGH state.
3. The Expansion Out ($\overline{XO}$) pin of each device must be tied to the Expansion In ($\overline{XI}$) pin of the next device. See Figure 14.
4. External logic is needed to generate a composite Full Flag ($\overline{FF}$) and Empty Flag ($\overline{EF}$). This requires the ORing of all $\overline{EF}$s and ORing of all $\overline{FF}$s (i.e. all must be set to generate the correct composite $\overline{FF}$ or $\overline{EF}$). See Figure 14.
5. The Retransmit ($\overline{RT}$) function and Half-Full Flag ($\overline{HF}$) are not available in the Depth Expansion Mode.

For additional information, refer to Tech Note 9: *Cascading FIFOs or FIFO Modules.*

## USAGE MODES:

### WIDTH EXPANSION

Word width may be increased simply by connecting the corresponding input control signals of multiple devices. Status flags ($\overline{EF}$, $\overline{FF}$ and $\overline{HF}$) can be detected from any one device. Figure 13 demonstrates an 18-bit word width by using two IDT7200/7201A/7202As. Any word width can be attained by adding additional IDT7200/7201A/7202As (Figure 13).

### BIDIRECTIONAL OPERATION

Applications which require data buffering between two systems (each system capable of Read and Write operations) can be achieved by pairing IDT7200/7201A/7202As as shown in Figure 16. Both Depth Expansion and Width Expansion may be used in this mode.

### DATA FLOW-THROUGH

Two types of flow-through modes are permitted, a read flow-through and write flow-through mode. For the read flow-through mode (Figure 17), the FIFO permits a reading of a single word after writing one word of data into an empty FIFO. The data is enabled on the bus in ($t_{WEF} + t_A$) ns after the rising edge of $\overline{W}$, called the first write edge, and it remains on the bus until the $\overline{R}$ line is raised from LOW-to-HIGH, after which the bus would go into a three-state mode after $t_{RHZ}$ ns. The $\overline{EF}$ line would have a pulse showing temporary deassertion and then would be asserted.

In the write flow-through mode (Figure 18), the FIFO permits the writing of a single word of data immediately after reading one word of data from a full FIFO. The $\overline{R}$ line causes the $\overline{FF}$ to be deasserted but the $\overline{W}$ line being LOW causes it to be asserted again in anticipation of a new data word. On the rising edge of $\overline{W}$, the new word is loaded in the FIFO. The $\overline{W}$ line must be toggled when $\overline{FF}$ is not asserted to write new data in the FIFO and to increment the write pointer.

### COMPOUND EXPANSION

The two expansion techniques described above can be applied together in a straightforward manner to achieve large FIFO arrays (see Figure 15).

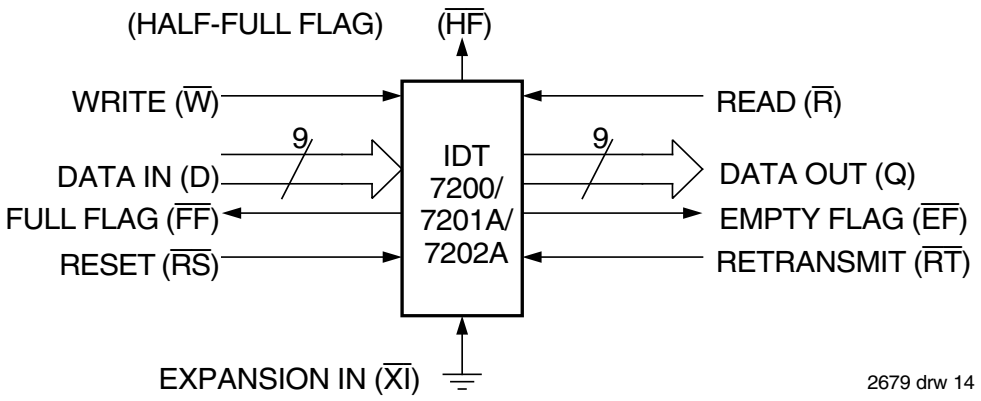


*Figure 12. Block Diagram of Single 256 x 9, 512 x 9, 1,024 x 9 FIFO*

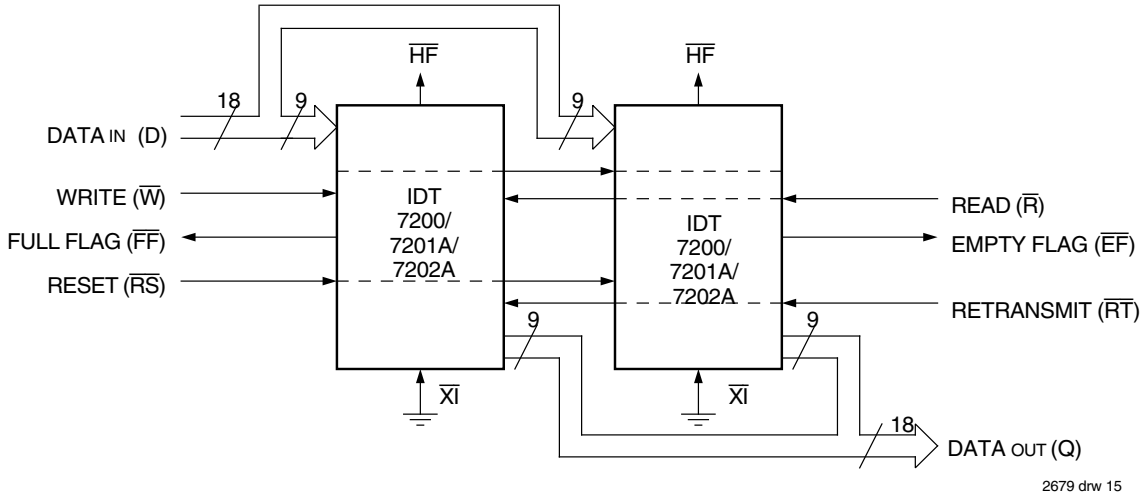


*Figure 13. Block Diagram of 256 x 18, 512 x 18, 1,024 x 18 FIFO Memory Used in Width Expansion Mode*

## TABLE 1 — RESET AND RETRANSMIT

Single Device Configuration/Width Expansion Mode

| Mode | Inputs | | | Internal Status | | Outputs | | |
|---|---|---|---|---|---|---|---|---|
| | $\overline{RS}$ | $\overline{RT}$ | $\overline{XI}$ | Read Pointer | Write Pointer | $\overline{EF}$ | $\overline{FF}$ | $\overline{HF}$ |
| Reset | 0 | X | 0 | Location Zero | Location Zero | 0 | 1 | 1 |
| Retransmit | 1 | 0 | 0 | Location Zero | Unchanged | X | X | X |
| Read/Write | 1 | 1 | 0 | Increment(1) | Increment(1) | X | X | X |

NOTE:
1. Pointer will increment if flag is HIGH.

## TABLE 2 — RESET AND FIRST LOAD TRUTH TABLE

Depth Expansion/Compound Expansion Mode

| Mode | Inputs | | | Internal Status | | Outputs | |
|---|---|---|---|---|---|---|---|
| | $\overline{RS}$ | $\overline{FL}$ | $\overline{XI}$ | Read Pointer | Write Pointer | $\overline{EF}$ | $\overline{FF}$ |
| Reset First Device | 0 | 0 | (1) | Location Zero | Location Zero | 0 | 1 |
| Reset All Other Devices | 0 | 1 | (1) | Location Zero | Location Zero | 0 | 1 |
| Read/Write | 1 | X | (1) | X | X | X | X |

NOTE:
1. $\overline{XI}$ is connected to $\overline{XO}$ of previous device. See Figure 14. $\overline{RS}$ = Reset Input, $\overline{FL}/\overline{RT}$ = First Load/Retransmit, $\overline{EF}$ = Empty Flag Output, $\overline{FF}$ = Full Flag Output, $\overline{XI}$ = Expansion Input, $\overline{HF}$ = Half-Full Flag Output

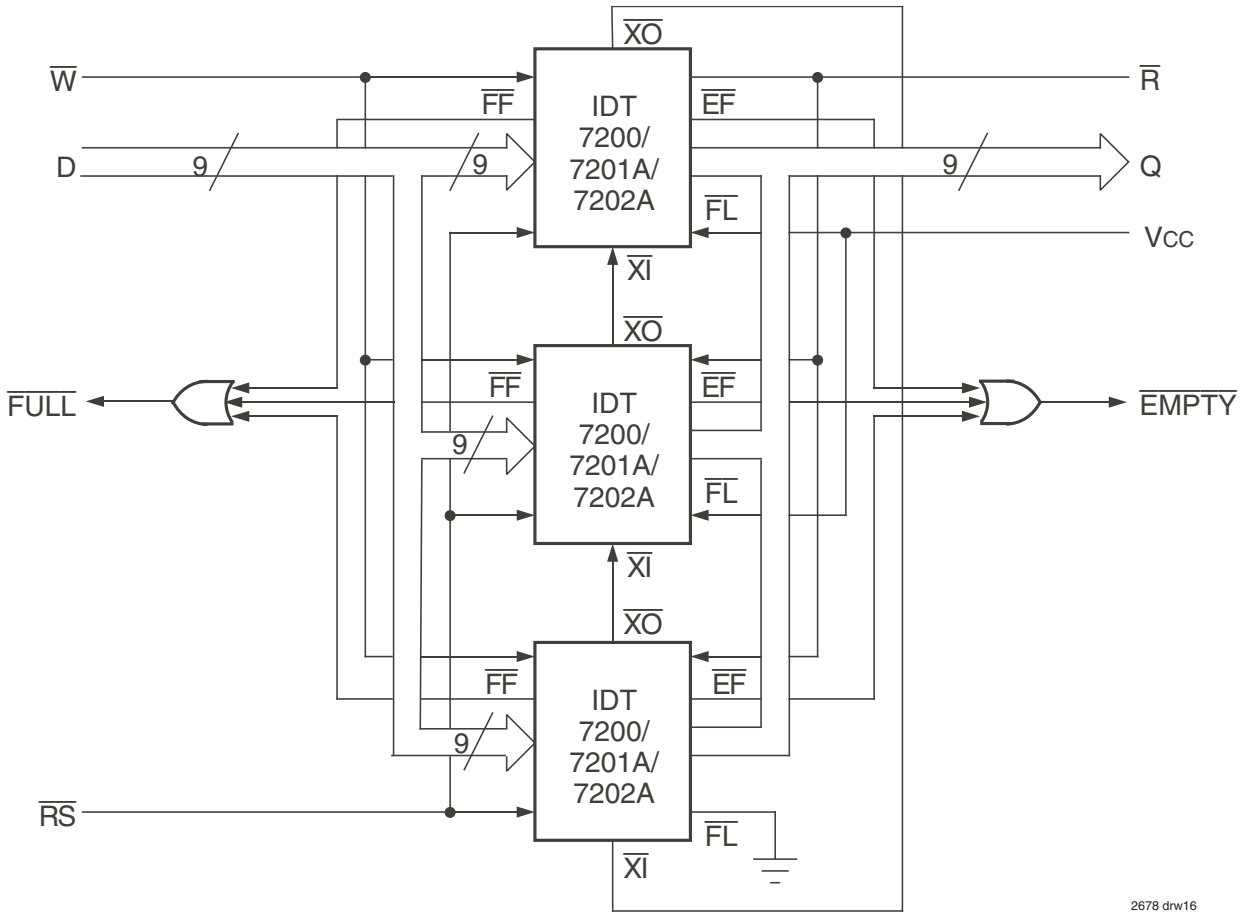


*Figure 14. Block Diagram of 768 x 9, 1,536 x 9, 3,072 x 9 FIFO Memory (Depth Expansion)*

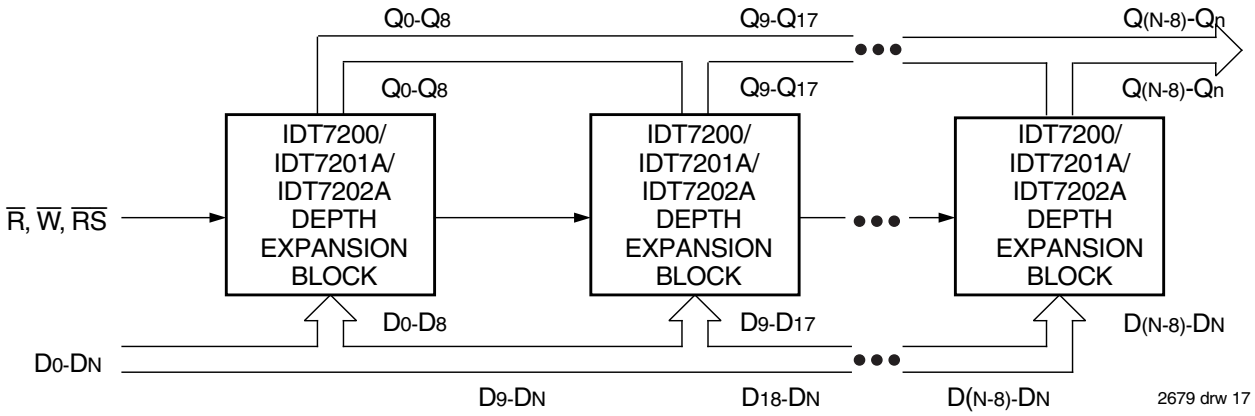


NOTES:
1. For depth expansion block see section on Depth Expansion and Figure 14.
2. For Flag detection see section on Width Expansion and Figure 13.

*Figure 15. Compound FIFO Expansion*

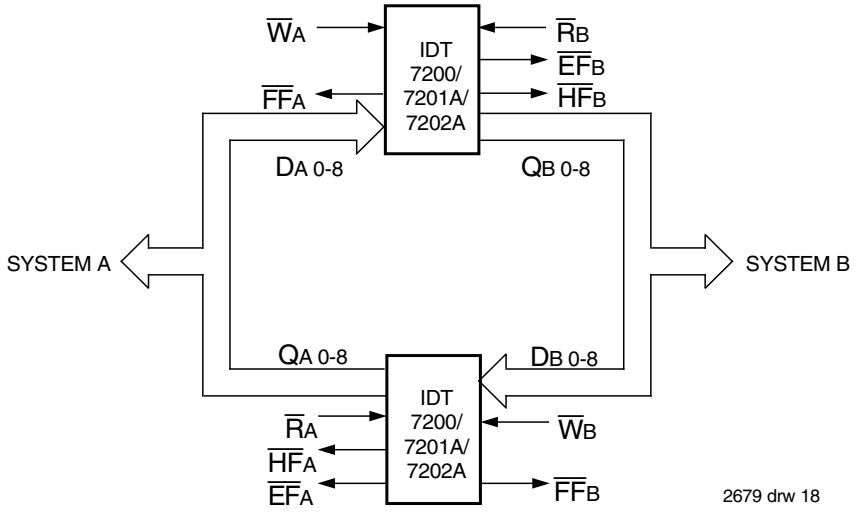


*Figure 16. Bidirectional FIFO Mode*

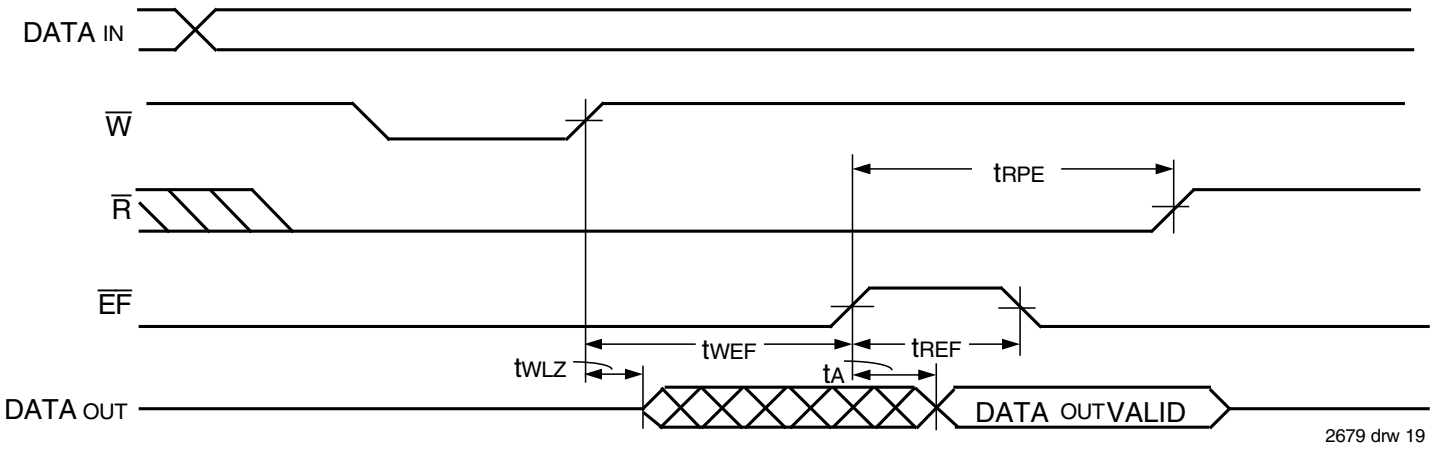


*Figure 17. Read Data Flow-Through Mode*

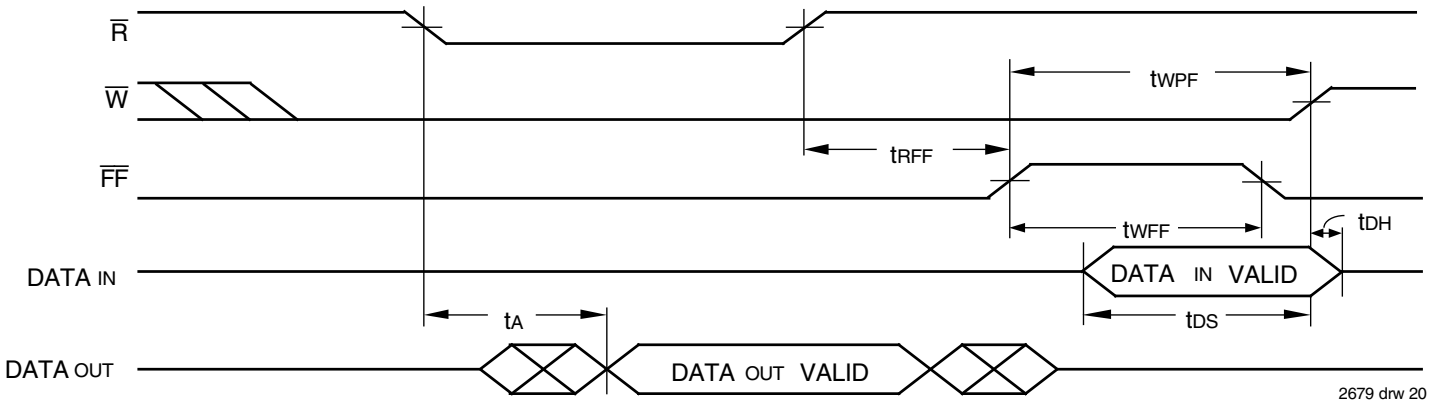


*Figure 18. Write Data Flow-Through Mode*

## ORDERING INFORMATION

| XXXX | X | XXX | X | X | X | X |
|---|---|---|---|---|---|---|
| Device Type | Power | Speed | Package | | Process/ Temperature Range | |

**Blank** — Tube or Tray
**8** — Tape and Reel

**Blank** — Commercial (0°C to +70°C)
**I**[1] — Industrial (-40°C to +85°C)
**B** — Military (-55°C to +125°C) Compliant to MIL-STD-883, Class B

**G**[3] — Green

| | | | | |
|---|---|---|---|---|
| P[4] | Plastic DIP | | P28-1 | (7201 & 7202 Only) |
| TP | Plastic Thin DIP | | P28-2 | |
| D | CERDIP | | D28-1 | (7201 & 7202 Only) |
| TD | Thin CERDIP | | D28-3 | |
| J | Plastic Leaded Chip Carrier | PLCC | J32-1 | |
| SO | SOIC | | SO28-3 | |
| L | Leadless Chip Carrier | LCC | L32-1 | (7201 & 7202 Only) |

| | | |
|---|---|---|
| 12 | Commercial Only | Access Time ($t_A$) Speed in Nanoseconds |
| 15 | Commercial and Industrial | |
| 20 | Commercial and Military | |
| 25 | Commercial and Industrial | |
| 30 | Military Only | |
| 35 | Commercial Only | |
| 50 | Commercial and (Military only for 7201) | |
| 80 | Military only for 7201 | |

**LA**[2] — Low Power

| | | |
|---|---|---|
| 7200 | 256 x 9-Bit FIFO | |
| 7201 | 512 x 9-Bit FIFO | |
| 7202 | 1,024 x 9-Bit FIFO | |
| 7280 | 256 x 9-Bit DUAL FIFO | See 7280/7281/7282 data sheet for details |
| 7281 | 512 x 9-Bit DUAL FIFO | |
| 7282 | 1,024 x 9-Bit DUAL FIFO | |

2679 drw 21

NOTES:
1. Industrial temperature range product is available for the 15ns and 25ns as a standard product.
2. "A" to be included for IDT7201 and IDT7202 ordering part number.
3. Green parts are available. For specific speeds and packages contact your local sales office.
4. For "P", Plastic Dip, when ordering green package, the suffix is "PDG".

## DATASHEET DOCUMENT HISTORY

| | | |
|---|---|---|
| 05/02/2001 | pgs. | 1, 2, 3, 4, 5 and 14. |
| 04/03/2006 | pgs. | 1 and 14. |
| 10/22/2008 | pg. | 1. |
| 6/29/2012 | pgs. | 1 and 14. |


*CORPORATE HEADQUARTERS*
6024 Silver Creek Valley Road
San Jose, CA 95138

*for SALES:*
800-345-7015 or 408-284-8200
fax: 408-284-2775
www.idt.com

*for Tech Support:*
408-360-1753
email: FIFOhelp@idt.com

Компания «ЭлектроПласт» предлагает заключение долгосрочных отношений при поставках импортных электронных компонентов на взаимовыгодных условиях!

Наши преимущества:

- Оперативные поставки широкого спектра электронных компонентов отечественного и импортного производства напрямую от производителей и с крупнейших мировых складов;
- Поставка более 17-ти миллионов наименований электронных компонентов;
- Поставка сложных, дефицитных, либо снятых с производства позиций;
- Оперативные сроки поставки под заказ (от 5 рабочих дней);
- Экспресс доставка в любую точку России;
- Техническая поддержка проекта, помощь в подборе аналогов, поставка прототипов;
- Система менеджмента качества сертифицирована по Международному стандарту ISO 9001;
- Лицензия ФСБ на осуществление работ с использованием сведений, составляющих государственную тайну;
- Поставка специализированных компонентов (Xilinx, Altera, Analog Devices, Intersil, Interpoint, Microsemi, Aeroflex, Peregrine, Syfer, Eurofarad, Texas Instrument, Miteq, Cobham, E2V, MA-COM, Hittite, Mini-Circuits,General Dynamics и др.);

Помимо этого, одним из направлений компании «ЭлектроПласт» является направление «Источники питания». Мы предлагаем Вам помощь Конструкторского отдела:

- Подбор оптимального решения, техническое обоснование при выборе компонента;
- Подбор аналогов;
- Консультации по применению компонента;
- Поставка образцов и прототипов;
- Техническая поддержка проекта;
- Защита от снятия компонента с производства.

**Как с нами связаться**

**Телефон:** 8 (812) 309 58 32 (многоканальный)
**Факс:** 8 (812) 320-02-42
**Электронная почта:** org@eplast1.ru
**Адрес:** 198099, г. Санкт-Петербург, ул. Калинина, дом 2, корпус 4, литера А.