PRODUCT SPECIFICATION

Description: CRGH Series High Power Thick Film Chip Resistors

Product Type: (Resistance range: 1.0Ω ~ 10MΩ)

CRGH0603_XXX	(CRGH0603 1/5W +/- 1% & 5% Taped)
CRGH0805_XXX	(CRGH0805 1/3W +/- 1% & 5% Taped)
CRGH1206_XXX	(CRGH1206 1/2W +/- 1% & 5% Taped)
CRGH2010JXXX	(CRGH2010 1W +/- 1% & 5% Taped)
CRGH2512JXXX	(CRGH2512 2W +/- 1% & 5% Taped)

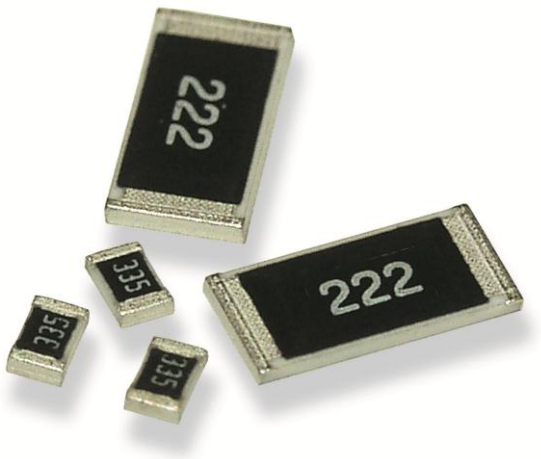

Parts corresponding to RoHS Compliant: 2005-Apr.-1

CHANGE NOTIFICATION HISTORY			
Version	**Date of Version**	**History**	**Remark**
1	2008/12/19	CRGH Series	
2	18/09/2013	Change to Terminal pad 2512 size	

High Power Thick Film Chip Resistors

1. Scope:

This specification relates to the Tyco Electronics Thick Film Chip Resistors (Lead Free)

2. Type designation:

The type designation shall be in the following form:

Ex.

Type	Power Rating	Resistance tolerance	Nominal Resistance
CRGH0603	1/5W	F (1%) J (5%)	1K0
CRGH0805	1/3W		
CRGH1206	1/2W		
CRGH2010	1W		
CRGH2512	2W		

3. Ratings:

Type	CRGH0603	CRGH0805	CRGH1206	CRGH2010	CRGH2512
Power Rating	0.20W	0.33W	0.50W	1.0W	2.0W
Max. Working Voltage	50 V	150 V	200 V	200 V	250 V
Max. Overload Voltage	100 V	300 V	400 V	400 V	500 V
Dielectric Withstanding Voltage	300 V	500 V	500 V	500 V	500 V
Temperature Range	-55°C ~ +155°C				
Ambient Temperature	70°C				

3.1 Power rating:

Resistors shall have a power rating based on continuous load operation at an ambient temperature of 70°C. For temperature in excess of 70°C, the load shall be derate as shown in fig. 1.

Figure 1

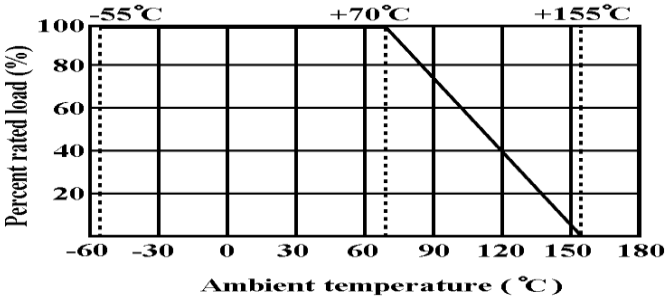

3.2 Voltage Rating:

Resistors shall have a rated direct-current (DC) continuous working voltage or an approximate sine-wave root-mean-square (RMS) alternating-current (AC) continuous working voltage at commercial-line frequency and waveform curresponding to the power rating , as determined from the following formula:

$$RCWV = \sqrt{P \times R}$$

Where : RCWV = Rated DC or RMS AC continuous working voltage at commercial-line frequency and waveform (volt)

P = Power Rating (watt)

R = Nominal Resistance (ohm)

In no case shall the rated DC or RMS AC continuous working voltage be greater than the applicable maximum value.

High Power Thick Film Chip Resistors

4. Construction :

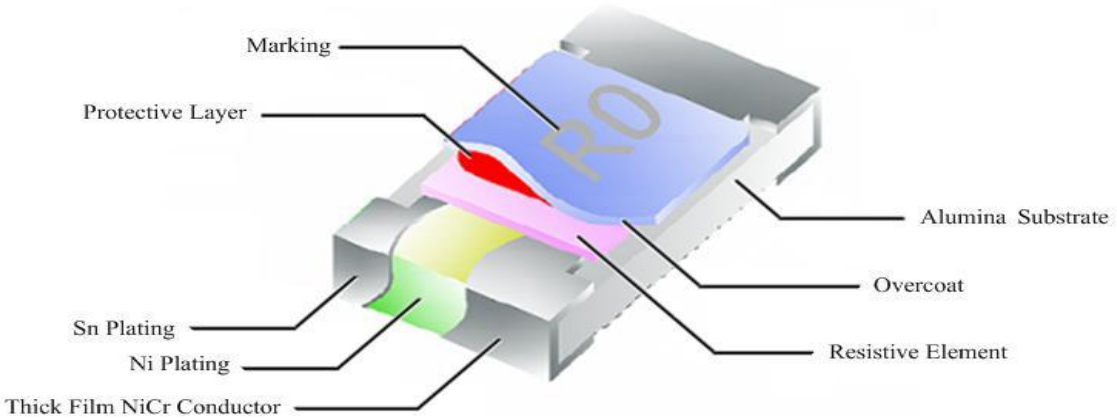

5. Power rating and dimensions

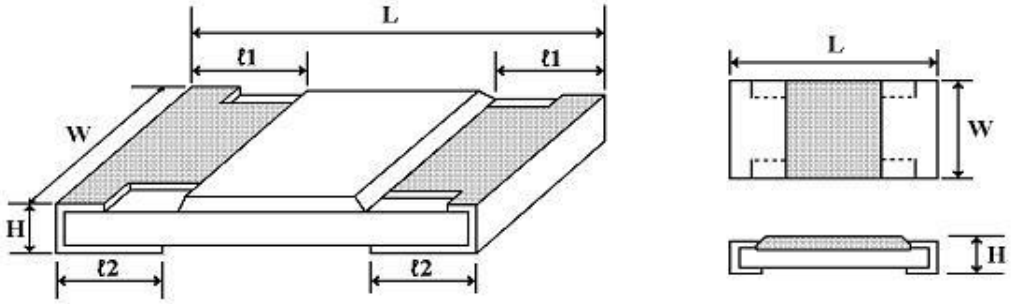

Dimension :

Type	Dimension (mm)				
	L	W	H	ℓ1	ℓ2
CRGH0603	1.60 ± 0.10	0.80 + 0.15 - 0.10	0.45 ± 0.10	0.30 ± 0.20	0.30 ± 0.20
CRGH0805	2.00 ± 0.15	1.25 + 0.15 - 0.10	0.55 ± 0.10	0.40 ± 0.20	0.40 ± 0.20
CRGH1206	3.10 ± 0.15	1.55 + 0.15 - 0.10	0.55 ± 0.10	0.45 ± 0.20	0.45 ± 0.20
CRGH2010	5.00 ± 0.20	2.50 ± 0.15	0.55 ± 0.10	0.60 ± 0.25	0.50 ± 0.20
CRGH2512	6.35 ± 0.10	3.20 ± 0.15	0.55 ± 0.10	0.60 ± 0.25	1.80 ± 0.20

Power Rating :

Type	Power Rating at 70°C	Tolerance %	Resistance Range	Standard Series	TCR
CRGH0603	0.20W	± 1	1Ω ~ 10MΩ	E-96	≤ 10Ω ±200PPM/°C < 10Ω ±100PPM/°C
		± 5	1Ω ~ 10MΩ	E-24	
CRGH0805	0.33W	± 1	1Ω ~ 10MΩ	E-96	≤ 10Ω ±200PPM/°C <
		± 5	1Ω ~ 10MΩ	E-24	
CRGH1206	0.50W	± 1	1Ω ~ 10MΩ	E-96	≤ 10Ω ±200PPM/°C <
		± 5	1Ω ~ 10MΩ	E-24	
CRGH2010	1.00W	± 1	1Ω ~ 10MΩ	E-24	< 10Ω ±200PPM/°C <
		± 5	1Ω ~ 10MΩ		
CRGH2512	2.00W	± 1	1Ω ~ 9.76Ω	E-96	< 10Ω ±200PPM/°C <
		± 5	1.1MΩ ~ 10MΩ	E-24	

High Power Thick Film Chip Resistors

5.1 PCB Layout Plan:

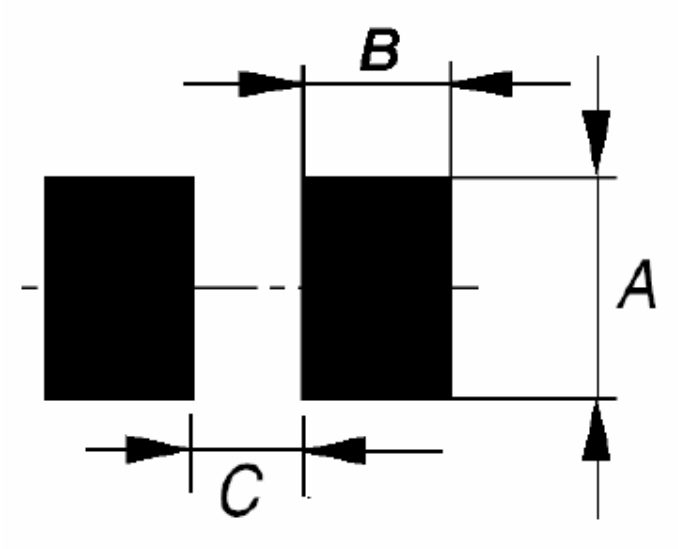

Dimension :

Type	Dimension (mm)		
	A	B	C
CRGH0603	1.00	1.00	0.60
CRGH0805	1.30	1.20	1.00
CRGH1206	1.80	1.20	2.20
CRGH2010	3.00	1.50	3.80
CRGH2512	3.50	1.90	5.00

High Power Thick Film Chip Resistors

6. Marking :

6.1 Resistors

A. ± 5% Tolerance : the first two digits are significant figures of resistance and the third denoted number of zeros.

Ex. | | 333 | | 33KΩ

B. For ohmic values below 10 Ω, read letter "R" as decimal point.

Ex. | | 2R2 | | 2.2Ω

C. For E-96 series [±1% (F) tolerance] in CRGH0603 size 3 digit system (due to space restrictions) please refer to page 4. for coding formula

Ex. | | 02C | | 10.2KΩ

D. ±1% Toler CRGH0805_XXX (CRGH0805 1/3W +/- 1% & 5% Taped) resistance and the fourth digit denoted number of zeros. Letter"R" is for decimal point.

Ex. | CRGH | 2701 | | 2.7KΩ

| | 10R5 | | 10.5Ω

6.2 Labels

Label shall be marked with the following item :

Label shall be marked with the following item :

A. Nominal Resistance and Resistance Tolerance
B. Power Rating and Size
C. Quantity
D. Part No.
E. P.O.No.
F. Lot No.

Ex.

tyco / Electronics
CHIP RESISTORS
NEOHM

RESISTANCE:	330K	Ω	± 5 %
WATTAGE:	1/2W	SIZE:	CRGH0603
QUANTITY:	5,000	PCS	Pb-Free
PART NO.:	CRGH0603F330K	RoHS	2002/95/EC
LOT NO. :	825723	REF #	2456319325

Remark : **For CRGH0603** ± 1 % : Label is 332K, value is 332KΩ, marking is 51D
± 5 % : Label is 330K, value is 330KΩ, marking is 334
± 1 % : Label is 330K, value is 330KΩ, marking is 3303

High Power Thick Film Chip Resistors

Mutiplier Code :

Code	A	B	C	D	E	F	G	H	X	Y	Z
	0	1	2	3	4	5	6	7	-1	-2	-3
Multiplier	10	10	10	10	10	10	10	10	10	10	10

Coding

XX

Resistance Code

Formula

X

Multiplier Code

Example :

10K2 = 102 X 10^{2} = 02C

102 → 02, 10^{2} → C

33R2 = 332 X 10^{-1} = 51X

332 → 51, 10^{-1} → X

Value	Code	Value	Code	Value	Code	Value	Code	Value	Code
100	**01**	162	**21**	261	**41**	422	**61**	681	**81**
102	**02**	165	**22**	267	**42**	432	**62**	698	**82**
105	**03**	169	**23**	274	**43**	442	**63**	715	**83**
107	**04**	174	**24**	280	**44**	453	**64**	732	**84**
110	**05**	178	**25**	287	**45**	464	**65**	750	**85**
113	**06**	182	**26**	294	**46**	475	**66**	768	**86**
115	**07**	187	**27**	301	**47**	487	**67**	787	**87**
118	**08**	191	**28**	309	**48**	499	**68**	806	**88**
121	**09**	196	**29**	316	**49**	511	**69**	825	**89**
124	**10**	200	**30**	324	**50**	523	**70**	845	**90**
127	**11**	205	**31**	332	**51**	536	**71**	866	**91**
130	**12**	210	**32**	340	**52**	549	**72**	887	**92**
133	**13**	215	**33**	348	**53**	562	**73**	909	**93**
137	**14**	221	**34**	357	**54**	576	**74**	931	**94**
140	**15**	226	**35**	365	**55**	590	**75**	953	**95**
143	**16**	232	**36**	374	**56**	604	**76**	976	**96**
147	**17**	237	**37**	383	**57**	619	**77**		
150	**18**	243	**38**	392	**58**	634	**78**		
154	**19**	249	**39**	402	**59**	649	**79**		
158	**20**	255	**40**	412	**60**	665	**80**		

*Marking for CRGH0603 E-96 series, the resistance value that no have multiplier code indicate marking follow this:
The first two digits are significant figures of resistance and the third one denoted number of zeros
and under line the marking letters.

Ex.

	122	

1.2KΩ

High Power Thick Film Chip Resistors

7. Performance specification :

Characteristics	Limits	Test Methods (JIS C 5201-1)
Dielectric withstanding voltage	No evidence of flashover mechanical damage, arcing or insulation break down	4.7 Clamped in the trough of a 90°C metallic v-block and shall be tested at ac potential respectively specified in the type for 60-70 seconds
Temperature Coefficient	See Page 2	4.8 Natural resistance change per temp. degree centigrade. $\frac{R2-R1}{R1(t2-t1)} \times 10^6$ (PPM/°C) R1: Resistance value at room temperature (T1) R2: Resistance value at room temp. plus 100°C (T2) Test pattern: room temp. (T1), room temp. +100°C (T2)
Short time Overload	Resistance change rate is ± 5% (2.0% + 0.1Ω) Max. ± 1% (1.0% + 0.1Ω) Max.	4.13 Permanent resistance change after the application of a potential of 2.5 times RCWV for 5 seconds.
Solderability	95 % coverage Min.	Wave Solder: Test temperature of solder: 245°C ±3°C dipping time in solder : 2-3 seconds. Reflow Solder: 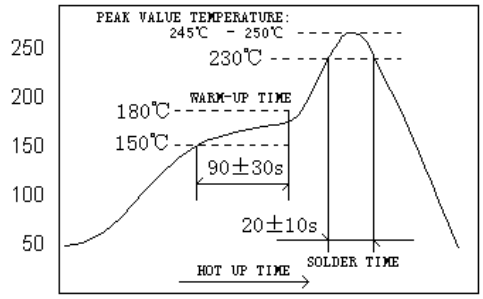
Soldering heat	Resistance change rate is: ±(1%+0.05Ω) Max.	4.18 Dip the resistor into a solder bath having a temperature of 260°C ± 3°C and hold it for 10 ± 1 seconds.
Temperature cycling	Resistance Change Rate Is ± 5% (1.0% + 0.05Ω) Max. ± 1% (0.5% + 0.05Ω) Max.	4.19 Resistance change after continuous 5 cycles for duty cycle specified below :

Step	Temperature	Time
1	-55°C ± 3°C	30 mins
2	Room temp.	10 ~ 15 mins
3	+155°C ± 2°C	30 mins
4	Room temp.	10 ~ 15 mins

Humidity	Resistance change rate is ± 5% (3.0% + 0.1Ω) Max. ± 1% (1.0% + 0.1Ω) Max.	4.24 Temporary resistance change after 240 hours exposure in a humidity test chamber controlled at 40±2°C and 90-95% relative humidity
Load life in Humidty	Resistance change rate is ± 5% (3.0% + 0.1Ω) Max. ± 1% (1.0% + 0.1Ω) Max.	7.9 Resistance change after 1,000 hours (1.5 hours "on", 0.5 hour "off") at RCWV in a humidity chamber controlled at 40°C ± 2°C and 90 to 95% relative humidity
Load Life	Resistance change rate is ± 5% (3.0% + 0.1Ω) Max. ± 1% (1.0% + 0.1Ω) Max.	4.25.1 Permanent resistance change after 1,000 hours operating at RCWV, with duty cycle of (1.5 hours"on", 0.5 hour"off") at 70°C ± 2°C ambient
Terminal Bending	Resistance change rate is ± (1.0% + 0.05Ω) Max.	4.33 Twist of Test Board : Y/X = 3/90 mm for 60 seconds

6. Packing specification :

6.1 Taping Dimension (mm)

A. Paper tape

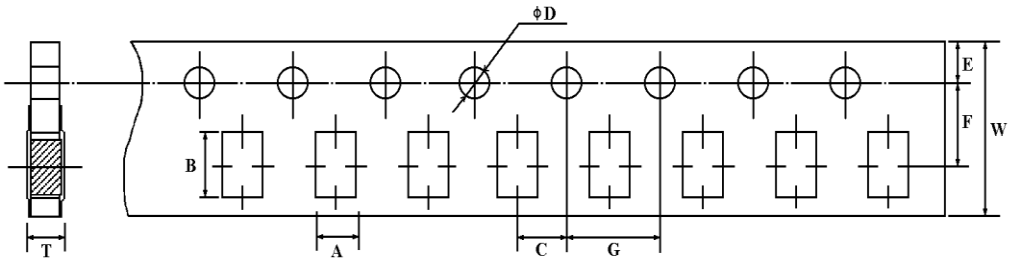

B. Plastic tape

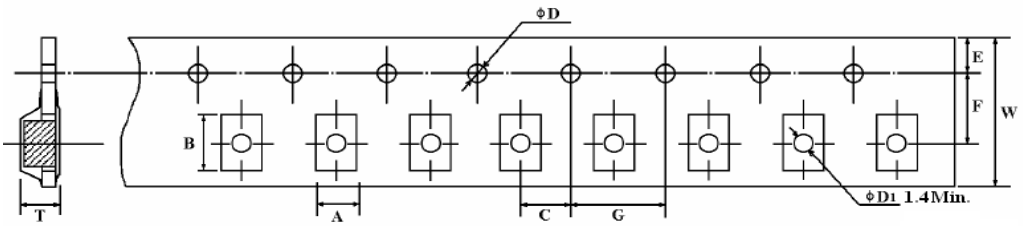

Type	A ± 0.2	B ± 0.2	C ± 0.05	ϕ D +0.1 - 0	E ± 0.1	F ± 0.05	G ± 0.1	W ± 0.2	T ± 0.1
CRGH0603	1.10	1.90	2.0	1.5	1.75	3.5	4.0	8.0	0.67
CRGH0805	1.65	2.40	2.0	1.5	1.75	3.5	4.0	8.0	0.81
CRGH1206	2.00	3.60	2.0	1.5	1.75	3.5	4.0	8.0	0.81
CRGH2010	2.80	5.50	2.0	1.5+0.25	1.75	5.5	4.0	12.0	1.2±0.0
CRGH2512	3.60	6.90	2.0	1.5+0.25	1.75	5.5	4.0	12.0	1.2±0.0

7.2 Reel Dimension (mm)

A. Paper tape

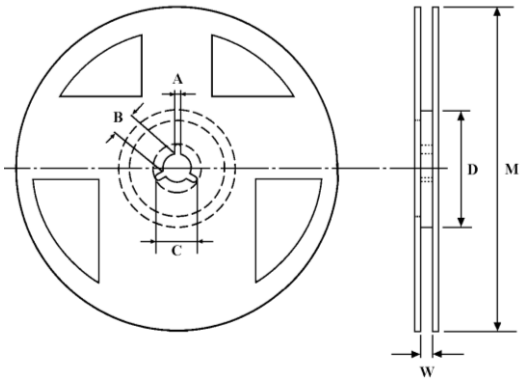

B. Plastic tape

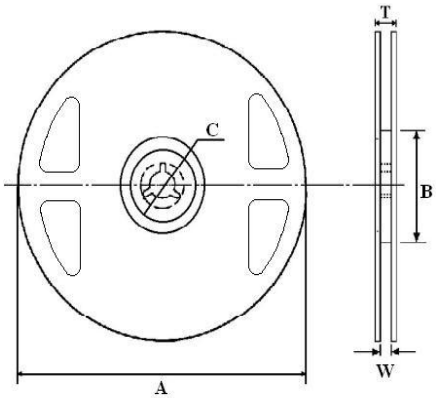

Type	Packaging	Quantity Per Reel	A	B	C	D	M ± 2	W ± 1	T ± 1
CRGH0603	Paper	5,000 pcs.	2±0.5	13±0.5	21±0.5	60±1.0	178±2.0	10±1.0	-
CRGH0805	Paper	5,000 pcs.	2±0.5	13±0.5	21±0.5	60±1.0	178±2.0	10±1.0	-
CRGH1206	Paper	5,000 pcs.	2±0.5	13±0.5	21±0.5	60±1.0	178±2.0	10±1.0	-
CRGH2010	Plastic	4,000 pcs.	180-3.0	60+1.0	13±0.2	-	-	13.5±0.5	15.4±1.0
CRGH2512	Plastic	4,000 pcs.	180-3.0	60+1.0	13±0.2	-	-	13.5±0.5	15.4±1.0

High Power Thick Film Chip Resistors

Part Number System

Explanation of Part Number System

1	2	3	4	5	6	7	8	9	10	11	12	13
C	R	G	H	0	6	0	3	F	1	0	0	K

Series Name

CRGH Series High Power Thick Film Chip Resistors

Case Size / Wattage:

0603
0805
1206
2010
2512

Tolerance:

F ~ ± 1%

J ~ ± 5%

Resistance Value:

1R0 - 1.0 ohm
100R - 100 ohms
1K0 - 1000 ohms
10K - 10,000 ohms
100K - 100,000 ohms
1M0 - 1,000,000 ohms
10M - 10,000,000 ohms

CRGH0805_XXX (CRGH0805 1/3W +/- 1% & 5% Taped)

CRGH2512JXXX (CRGH2512 2W +/- 1% & 5% Taped)

Компания «ЭлектроПласт» предлагает заключение долгосрочных отношений при поставках импортных электронных компонентов на взаимовыгодных условиях!

Наши преимущества:

- Оперативные поставки широкого спектра электронных компонентов отечественного и импортного производства напрямую от производителей и с крупнейших мировых складов;
- Поставка более 17-ти миллионов наименований электронных компонентов;
- Поставка сложных, дефицитных, либо снятых с производства позиций;
- Оперативные сроки поставки под заказ (от 5 рабочих дней);
- Экспресс доставка в любую точку России;
- Техническая поддержка проекта, помощь в подборе аналогов, поставка прототипов;
- Система менеджмента качества сертифицирована по Международному стандарту ISO 9001;
- Лицензия ФСБ на осуществление работ с использованием сведений, составляющих государственную тайну;
- Поставка специализированных компонентов (Xilinx, Altera, Analog Devices, Intersil, Interpoint, Microsemi, Aeroflex, Peregrine, Syfer, Eurofarad, Texas Instrument, Miteq, Cobham, E2V, MA-COM, Hittite, Mini-Circuits,General Dynamics и др.);

Помимо этого, одним из направлений компании «ЭлектроПласт» является направление «Источники питания». Мы предлагаем Вам помощь Конструкторского отдела:

- Подбор оптимального решения, техническое обоснование при выборе компонента;
- Подбор аналогов;
- Консультации по применению компонента;
- Поставка образцов и прототипов;
- Техническая поддержка проекта;
- Защита от снятия компонента с производства.

Как с нами связаться

Телефон: 8 (812) 309 58 32 (многоканальный)
Факс: 8 (812) 320-02-42
Электронная почта: org@eplast1.ru
Адрес: 198099, г. Санкт-Петербург, ул. Калинина, дом 2, корпус 4, литера А.