#4-40 UNC-2A Pi & C Filters

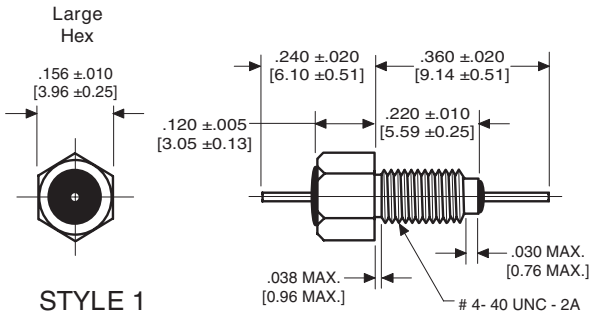

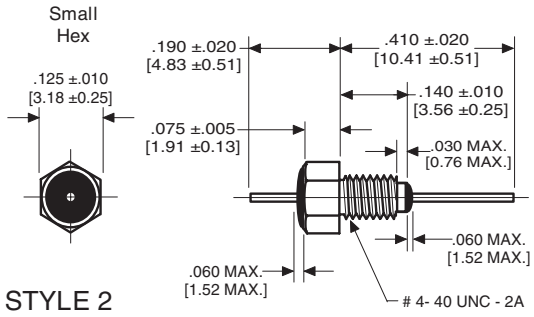

inches
[mm]

TUSONIX Part Number	Style	Lead Dia.	Circuit	Working Voltage (dc) 85°C	Working Voltage (dc) 125°C	Capacitance (pF)	Capacitance Tolerance	Current (A)	Minimum No-Load Insertion Loss (dB) at 25°C per MIL-Std-220 1MHz	10MHz	100MHz	1GHz	10GHz
Pi Configuration													
4261-001	1	.018 [.46]	Pi	--	50	5500	GMV	3	--	14	55	70	--
4200-012	1	.018 [.46]	Pi	--	200	1500	-0,+100%	3	--	5	42	70	--
C Configuration													
4403-035	2	.030 [.76]	C	70	50	10,000	GMV	10	4	21	35	50	60
4400-005	1	.020 [.51]	C	70	50	10,000	GMV	10	4	21	35	50	60
4400-035	1	.030 [.76]	C	70	50	10,000	GMV	10	4	21	35	50	60
4403-005	2	.020 [.51]	C	70	50	10,000	GMV	10	4	21	35	50	60
4400-006	1	.020 [.51]	C	70	50	15,000	GMV	10	7	20	35	55	60
4400-036	1	.030 [.76]	C	70	50	15,000	GMV	10	7	20	35	55	60
4403-006	2	.020 [.51]	C	70	50	15,000	GMV	10	7	20	35	55	60
4403-036	2	.030 [.76]	C	70	50	15,000	GMV	10	7	20	35	55	60
4400-010	1	.020 [.51]	C	70	50	27,000	GMV	10	10	28	42	65	65
4400-040	1	.030 [.76]	C	70	50	27,000	GMV	10	10	28	42	65	65
4403-010	2	.020 [.51]	C	70	50	27,000	GMV	10	10	28	42	65	65
4403-040	2	.030 [.76]	C	70	50	27,000	GMV	10	10	28	42	65	65
4400-016	1	.020 [.51]	C	50	50	50,000	GMV	10	15	35	45	70	--
4400-041	1	.030 [.76]	C	50	50	50,000	GMV	10	15	35	45	70	--
4400-003	1	.020 [.51]	C	150	100	2700	GMV	10	--	10	25	40	50
4400-033	1	.030 [.76]	C	150	100	2700	GMV	10	--	10	25	40	50
4403-003	2	.020 [.51]	C	150	100	2700	GMV	10	--	10	25	40	50
4403-033	2	.030 [.76]	C	150	100	2700	GMV	10	--	10	25	40	50
4400-004	1	.020 [.51]	C	150	100	5000	GMV	10	--	15	30	45	55
4400-034	1	.030 [.76]	C	150	100	5000	GMV	10	--	15	30	45	55
4403-004	2	.020 [.51]	C	150	100	5000	GMV	10	--	15	30	45	55
4403-034	2	.030 [.76]	C	150	100	5000	GMV	10	--	15	30	45	55
4400-680	1	.030 [.76]	C	300	200	5	MAX	10	--	--	--	--	--
4403-680	2	.030 [.76]	C	300	200	5	MAX	10	--	--	--	--	--
4400-008	1	.020 [51]	C	300	200	10	GMV	10	--	--	--	5	20
4400-038	1	.030 [.76]	C	300	200	10	GMV	10	--	--	--	5	20
4403-008	2	.020 [.51]	C	300	200	10	GMV	10	--	--	--	5	20
4403-038	2	.030 [.76]	C	300	200	10	GMV	10	--	--	--	5	20

Drawings not to scale.

All bushing style filters include hex nut and lock washer unless otherwise noted.

7741 North Business Park Drive
Tucson, Arizona 85743
Ph: 520-744-0400 Fax: 520-744-6155
Web site: www.tusonix.com E-mail: sales@tusonix.com

TUSONIX 4400 Series Miniature EMI Filters

These filters are ideal for applications where small size and high performance are critical and a threaded mounting technique is desired.

These C and L configured filters are available in two physical configurations and can be supplied with either unified or metric thread (see page 18 for metric). The small package and large range of electrical characteristics of the 4400 Series make it an effective solution for a variety of microwave applications.

TUSONIX Part Number	Style	Lead Dia.	Circuit	Working Voltage (dc)		Capacitance (pF)	Capacitance Tolerance	Current (A)	Minimum No-Load Insertion Loss (dB) at 25°C per MIL-Std-220				
				85°C	125°C				1MHz	10MHz	100MHz	1GHz	10GHz
C Configuration (Continued from page 13)													
4400-009	1	.020 [.51]	C	300	200	25	GMV	10	--	--	--	10	25
4400-039	1	.030 [.76]	C	300	200	25	GMV	10	--	--	--	10	25
4403-009	2	.020 [.51]	C	300	200	25	GMV	10	--	--	--	10	25
4403-039	2	.030 [.76]	C	300	200	25	GMV	10	--	--	--	10	25
4400-000	1	.020 [.51]	C	300	200	100	GMV	10	--	--	3	20	28
4400-030	1	.030 [.76]	C	300	200	100	GMV	10	--	--	3	20	28
4403-000	2	.020 [.51]	C	300	200	100	GMV	10	--	--	3	20	28
4403-030	2	.030 [.76]	C	300	200	100	GMV	10	--	--	3	20	28
4400-001	1	.020 [.51]	C	300	200	500	GMV	10	--	--	15	35	40
4400-031	1	.030 [.76]	C	300	200	500	GMV	10	--	--	15	35	40
4403-001	2	.020 [.51]	C	300	200	500	GMV	10	--	--	15	35	40
4403-031	2	.030 [.76]	C	300	200	500	GMV	10	--	--	15	35	40
4400-007	1	.020 [.51]	C	300	200	1000	GMV	10	--	5	20	35	45
4400-037	1	.030 [.76]	C	300	200	1000	GMV	10	--	5	20	35	45
4403-007	2	.020 [.51]	C	300	200	1000	GMV	10	--	5	20	35	45
4403-037	2	.030 [.76]	C	300	200	1000	GMV	10	--	5	20	35	45
4400-002	1	.020 [.51]	C	300	200	1200	GMV	10	--	5	20	35	45
4400-032	1	.030 [.76]	C	300	200	1200	GMV	10	--	5	20	35	45
4403-002	2	.020 [.51]	C	300	200	1200	GMV	10	--	5	20	35	45
4403-032	2	.030 [.76]	C	300	200	1200	GMV	10	--	5	20	35	45
L Configuration													
4400-055	1	.020 [.51]	L	70	50	10,000	GMV	10	4	21	35	55	70
4400-056	1	.020 [.51]	L	70	50	15,000	GMV	10	7	25	40	60	60
4400-060	1	.020 [.51]	L	70	50	27,000	GMV	10	10	28	45	65	70
4400-057	1	.020 [.51]	L	50	50	50,000	GMV	10	15	35	52	70	--
4400-053	1	.020 [.51]	L	150	100	2700	GMV	10	--	10	25	40	55
4400-054	1	.020 [.51]	L	150	100	5000	GMV	10	--	15	30	45	60
4400-050	1	.020 [.51]	L	300	200	100	GMV	10	--	--	3	20	33
4400-051	1	.020 [.51]	L	300	200	500	GMV	10	--	--	15	35	45
4400-052	1	.020 [.51]	L	300	200	1200	GMV	10	--	5	20	35	50

Drawings not to scale.

Please Note: All bushing style filters include hex nut and lock washer unless otherwise noted.

#6-40 UNF-2A EMI Pi Filters

inches
[mm]

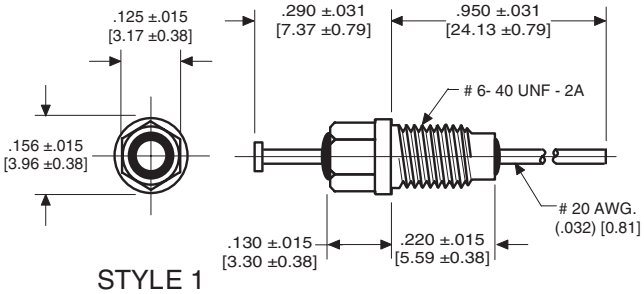

STYLE 1

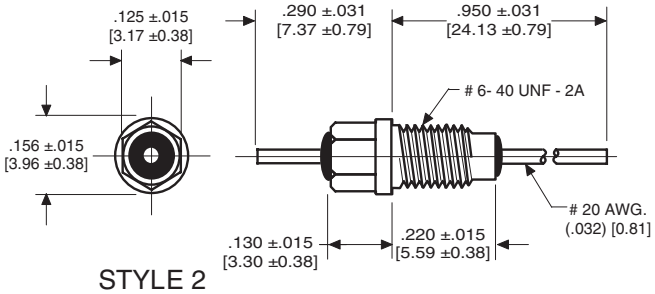

STYLE 2

TUSONIX Part Number	Style	Circuit	Working Voltage (dc)		Capacitance (pF)	Capacitance Tolerance	Current (A)	Minimum No-Load Insertion Loss (dB) at 25°C per MIL-Std-220			
			85°C	125°C				10MHz	100MHz	1GHz	10GHz
Pi Configuration											
4200-000	1	Pi	300	200	1500	GMV	10	5	40	60	60
4200-002	2	Pi	300	200	1500	GMV	10	5	40	60	60
4200-005	1	Pi	300	200	3000	GMV	10	8	50	70	70

Drawings not to scale.

Please Note: All bushing style filters include hex nut and lock washer unless otherwise noted.

MIL PARTS CROSS REFERENCE

MIL-PRF-15733	TUSONIX No.	Page No. ❖	MIL-PRF-15733	TUSONIX No.	Page No. ❖
/28-0001	4201-501	18	/61-0001	4204-500	19
/28-0002	4201-503	18	/61-0002	4202-501	20
/28-0003	4251-503	NS	/61-0003	4206-502	21
/33-0001	4101-502	12	/61-0004	4206-501	21
/33-0002	4101-503	12	/61-0005	4203-502	NS
/38-0004	4601-503	NS	/61-0006	4203-501	20
/38-0005	4601-504	NS	/61-0007	4203-552	20
/43-0001	4204-501	19	/61-0008	4201-502	18
/43-0002	4201-506	NS	/61-0009	4253-500	NS
/44-0001	4251-500	NS	/61-0010	4203-553	20
/44-0002	4205-500	NS	/61-0011	4203-551	20
/44-0003	4205-501	NS	/61-0012	4253-501	NS
/46-0001	4207-500	NS	/61-0013	4251-502	NS
/49-0001	4601-502	NS	/61-0014	4251-501	NS
/49-0006	4601-501	NS	/62-0001	4101-501	12
/49-0007	4601-500	NS	/62-0002	4100-500	12
/51-0001	4101-504	12	/62-0003	4101-505	12
/51-0002	4151-501	12	/62-0004	4151-500	12
			/66-0001	4101-500	12

❖ NS indicates a part that is not shown in this catalog.

7741 North Business Park Drive
Tucson, Arizona 85743
Ph: 520-744-0400 Fax: 520-744-6155
Web site: www.tusonix.com E-mail: sales@tusonix.com

#6-32 UNC-2A Pi, C & L Filters and Feed-thru Capacitors

inches
[mm]

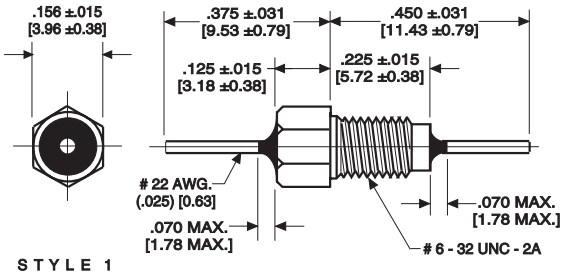

STYLE 1

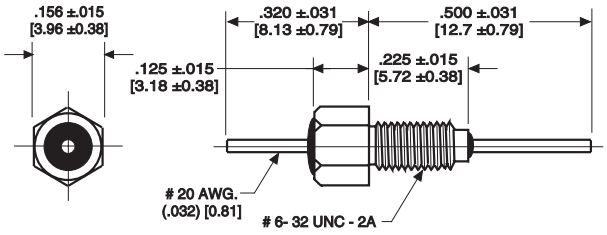

STYLE 2

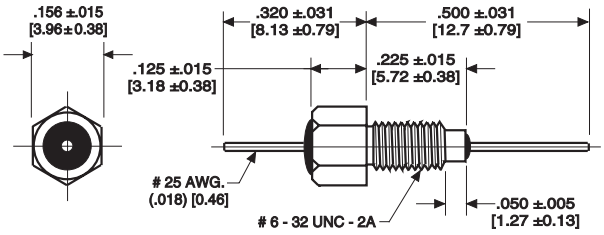

STYLE 3

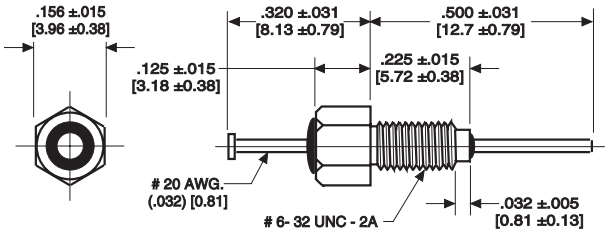

STYLE 4

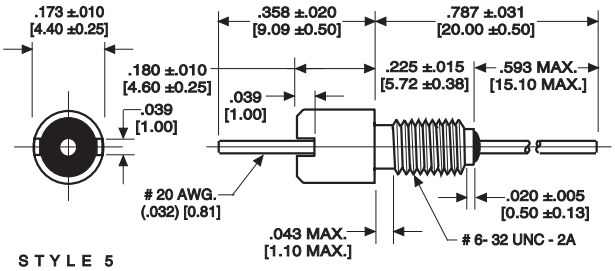

STYLE 5

TUSONIX Part Number	Temperature Range	WVDC	MAX. CAP. (Nominal) (pF)
2430	Z5, Y5, X5	200	1500
	X7	100	1500

Notes:

•• Typical Insertion Loss
∇ No Hex Nut or Lock Washer

Please see Temperature Characteristics and EIA Codes on page 25.

TUSONIX Part Number	Style	Notes	Circuit	Working Voltage (dc) 85°C	Working Voltage (dc) 125°C	Capacitance (pF)	Capacitance Tolerance	Current (A)	Minimum No-Load Insertion Loss (dB) at 25°C per MIL-Std-220 1MHz	10MHz	100MHz	1GHz	10GHz
Pi Configuration													
4260-001	3	--	Pi	--	50	5500	GMV	3	--	14	55	70	--
4260-002	3	--	Pi	--	50	7500	GMV	3	--	18	65	70	--
4260-000	3	--	Pi	400	200	2000	GMV	3	--	5	42	70	--
C Configuration													
4402-016	2	--	C	50	50	50,000	GMV	10	15	35	45	70	--
4402-005	2	--	C	100	100	10,000	GMV	10	4	21	35	50	--
4402-018	2	--	C	50	50	100,000	GMV	10	22	40	47	65	65
4402-680	5	∇	C	300	200	5	MAX	10	--	--	--	--	--
2430-003-X5F0-101M	1	••	C	200	100	100	±20%	5	--	--	3	20	28
2430-003-X5F0-102Z	1	••	C	200	100	1000	+80-20%	5	--	3	20	35	40
L Configuration													
4402-063	5	∇	L	200	100	4700	+80-20	10	--	15	30	45	55
4402-060	4	--	L	100	100	27,000	GMV	10	10	28	45	65	--

Drawings not to scale.

Please Note: All bushing style filters include hex nut and lock washer unless otherwise noted.

The products listed in this catalog are only a few of the thousands of variations that TUSONIX produces. For custom component design, please contact the factory direct.

TUSONIX

#8-32 UNC-2A Pi, C & L Filters and Feed-Thru Capacitors

inches
[mm]

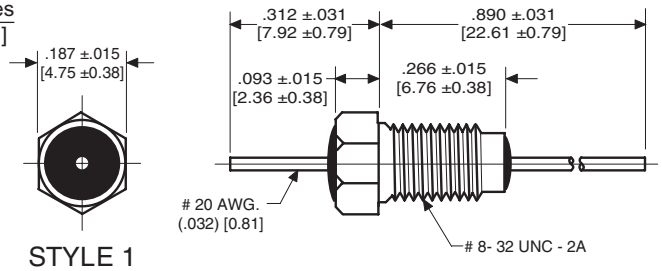

STYLE 1

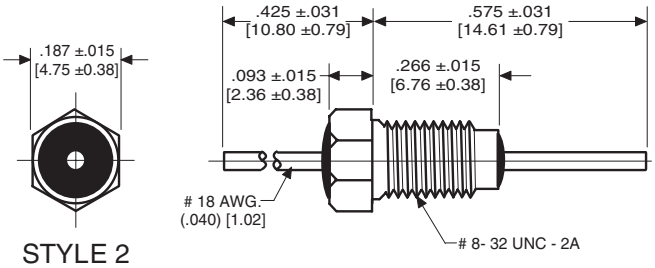

STYLE 2

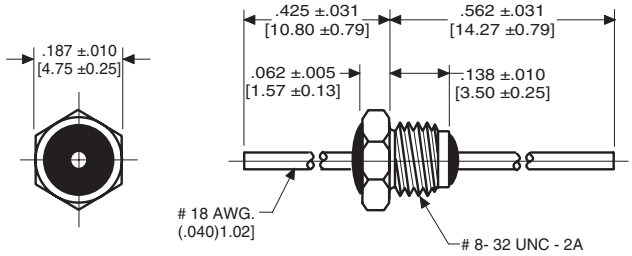

STYLE 3

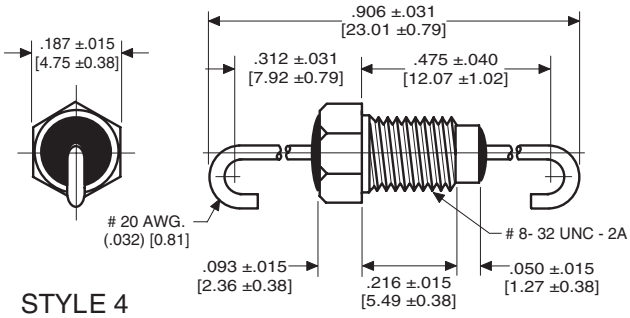

STYLE 4

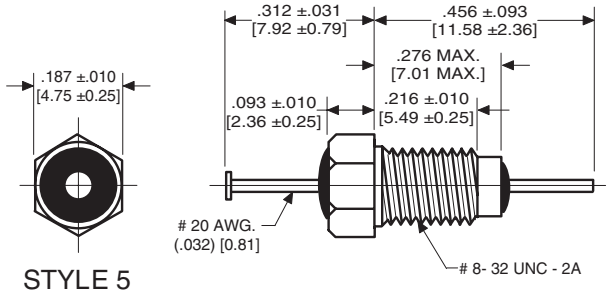

STYLE 5

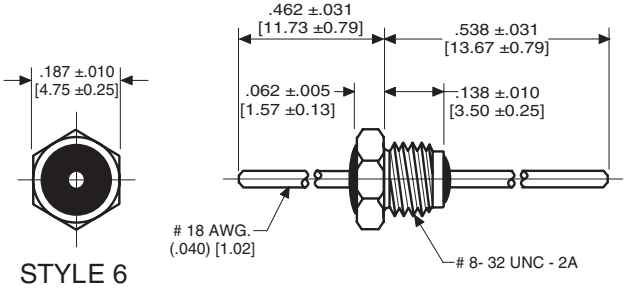

STYLE 6

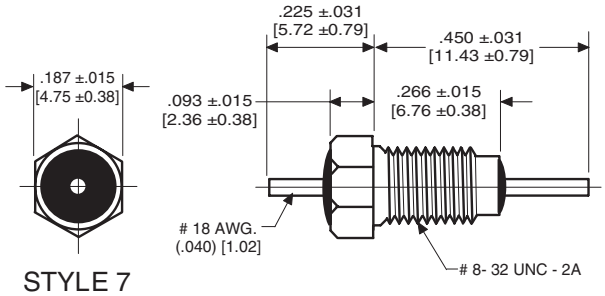

STYLE 7

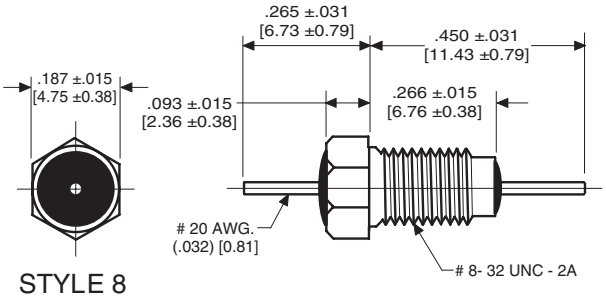

STYLE 8

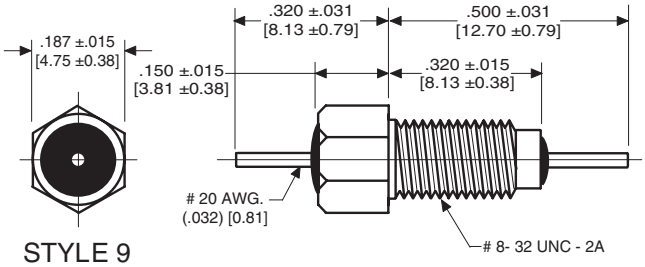

STYLE 9

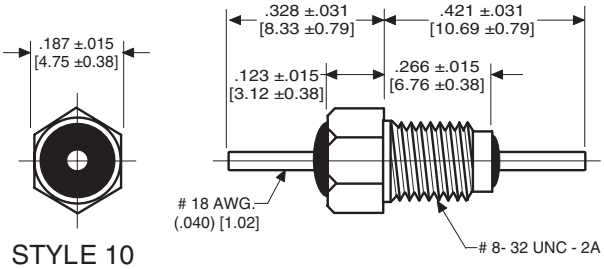

STYLE 10

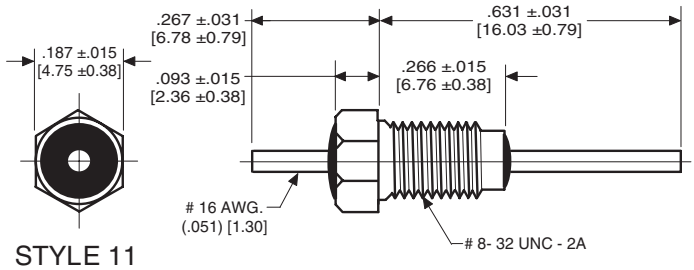

STYLE 11

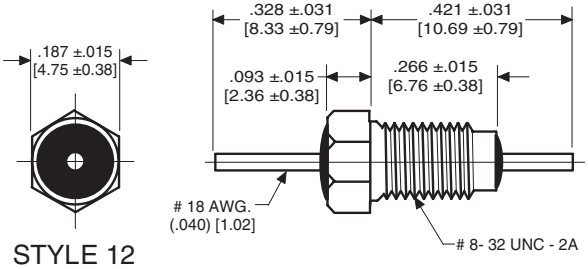

STYLE 12

Drawings not to scale.

Please Note: All bushing style filters include hex nut and lock washer unless otherwise noted.

7741 North Business Park Drive
Tucson, Arizona 85743
Ph: 520-744-0400 Fax: 520-744-6155
Web site: www.tusonix.com E-mail: sales@tusonix.com

#8-32 UNC-2A Pi, C & L Filters and Feed-Thru Capacitors

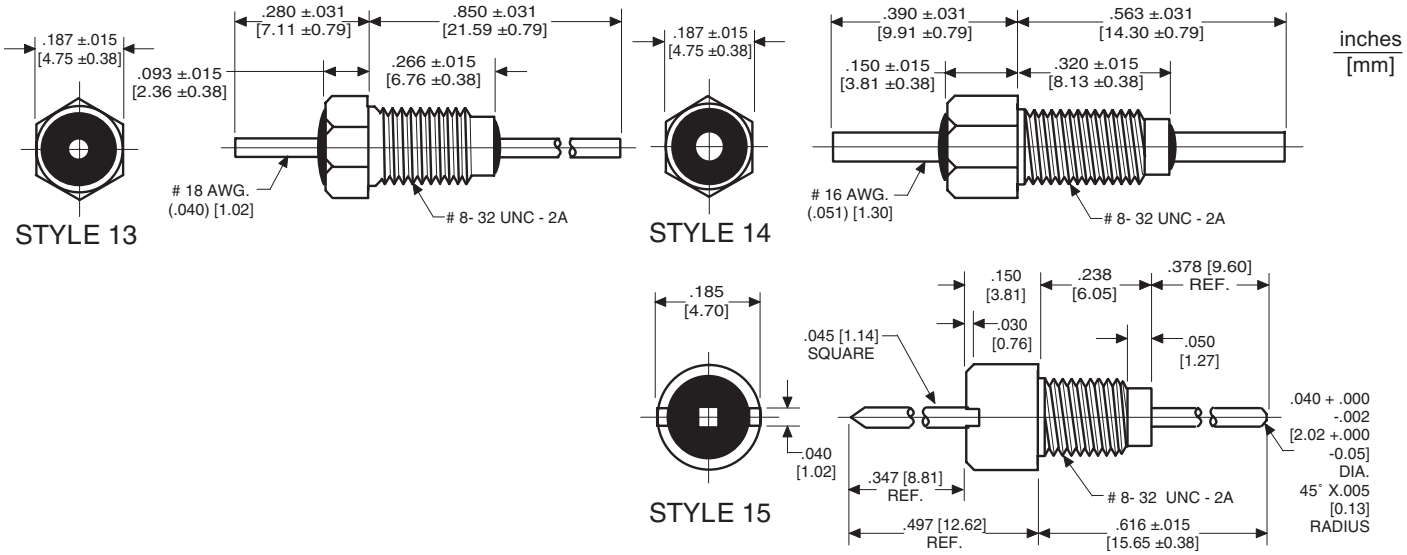

Series Number	Temperature Range	WVdc	MAX. Cap. (Nominal) (pF)
2425	Z5, Y5, X5	200	10,000
	X7	100	10,000

Notes:

- ♦ Turret Lead
- ∇ #18 AWG Lead 0.040 Dia.
- •• Typical Insertion Loss
- ❒ No hex nut or Lockwasher

Please see Temperature Characteristics and EIA Codes on page 25.

TUSONIX Part Number	MIL-PRF-15733 Number	Style	Notes	Circuit	Working Voltage (dc) 85°C	Working Voltage (dc) 125°C	Capacitance (pF)	Capacitance Tolerance	Current (A)	Minimum No-Load Insertion Loss (dB) at 25°C per MIL-Std-220 1MHz	10MHz	100MHz	1GHz	10GHz
Pi Configuration														
4251-001	--	8	--	Pi	--	50	15,000	GMV	10	5	18	65	70	--
4201-048	--	15	❒	Pi	200	100	100	GMV	15	--	--	5	32	--
4201-047	--	15	❒	Pi	200	100	1000	GMV	15	--	4	37	60	--
4201-502	/61-0008	5	--	Pi	--	100	1000	GMV	10	--	--	65	70	70
4201-000	--	1	--	Pi	200	100	1500	GMV	10	--	5	45	65	70
4201-001	--	1	♦	Pi	200	100	1500	GMV	10	--	5	45	65	70
4201-004	--	1	∇	Pi	200	100	1500	GMV	15	--	5	38	63	70
4201-006	--	1	♦∇	Pi	200	100	1500	GMV	15	--	5	38	63	70
4201-501	/28-0001	1	♦	Pi	--	100	1500	GMV	10	--	--	45	60	60
4201-503	/28-0002	4	--	Pi	--	100	1500	GMV	10	--	--	45	60	60
4201-003	--	2	--	Pi	200	100	2000	GMV	15	--	5	38	63	70
4201-050	--	1	--	Pi	200	100	5500	GMV	10	--	14	55	70	70
4201-051	--	1	♦	Pi	200	100	5500	GMV	10	--	14	55	70	70
4201-053	--	1	♦∇	Pi	200	100	5500	GMV	15	--	14	55	65	65
4201-083	--	9	--	Pi	200	100	10,000	+80-20%	10	--	18	65	70	70
4251-004	--	9	--	Pi	100	100	28,000	GMV	10	10	38	75	75	75
4205-002	--	3	--	Pi	250	125	65	+100 -0%	15	--	--	3	16	45
4205-018	--	6	--	Pi	250	125	65	+100 -0%	15	--	--	3	16	45
4205-017	--	6	--	Pi	250	125	1500	GMV	15	--	5	35	60	60
4205-001	--	3	--	Pi	250	125	1500	GMV	15	--	5	35	60	60
4251-000	--	7	--	Pi	185	125	3000	+100 -0%	15	--	10	30	65	65
4251-002	--	9	--	Pi	200	125	12,000	GMV	10	5	28	65	70	70
C Configuration														
2425-018-X5U0-101M	--	11	••♦	C	200	100	100	±20%	20	--	--	3	20	28
2425-544-X7R0-101M	--	11	••	C	200	100	100	±20%	20	--	--	3	20	28
2425-018-X5U0-102M	--	11	••♦	C	200	100	1000	±20%	20	--	3	20	35	40
2425-544-X7R0-102P	--	11	••	C	200	100	1000	+100 -0%	20	--	3	20	35	40
2425-018-X5W0-502M	--	11	••♦	C	200	100	5000	±20%	20	--	15	30	45	50
2425-601-X5W0-103Z	--	14	••	C	200	100	10,000	+80-20%	20	--	20	35	50	55
4404-001	--	1	♦	C	100	100	27,000	GMV	10	10	30	45	55	--
4404-002	--	12	--	C	140	100	50,000	GMV	10	15	34	45	60	--
4404-003	--	10	--	C	--	100	100,000	GMV	10	20	38	47	65	--
L Configuration														
4404-050	--	13	--	L	--	100	22,000	GMV	10	7	27	43	60	--

Drawings not to scale.

Please Note: All bushing style filters include hex nut and lock washer unless otherwise noted.

The products listed in this catalog are only a few of the thousands of variations that TUSONIX produces. For custom component design, please contact the factory direct.

TUSONIX

#8-36 UNF-2A and #12-28 UNF-2A Pi & C Filters and Feed-Thru Capacitors

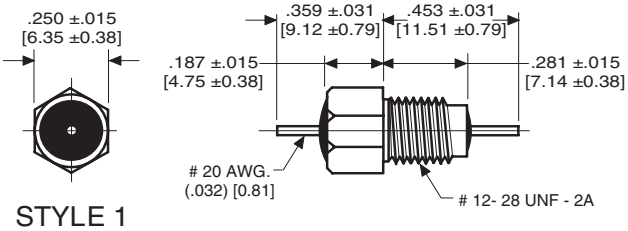

STYLE 1

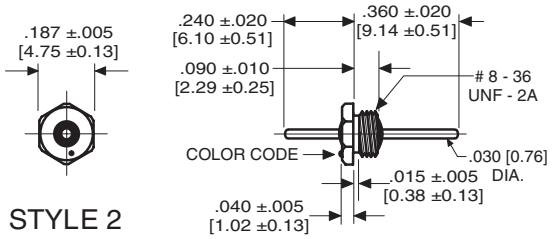

STYLE 2

inches
[mm]

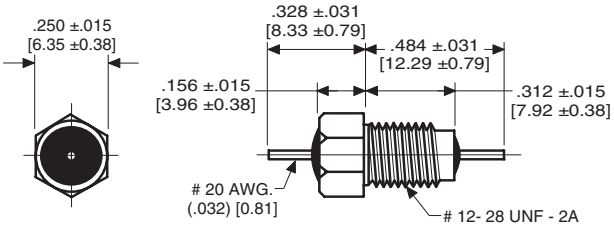

STYLE 3

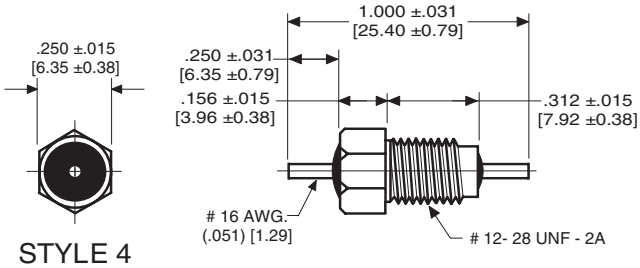

STYLE 4

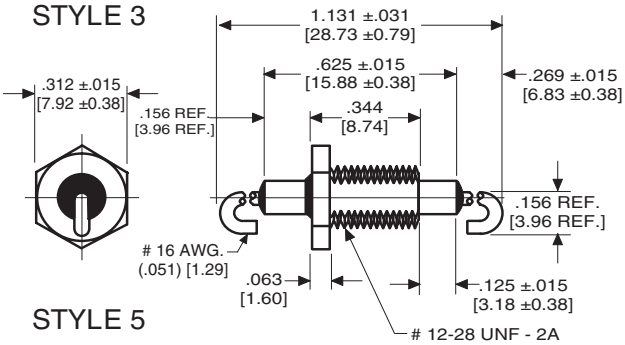

STYLE 5

Series Number	Temperature Range	WVDC	MAX. CAP. Nominal (pF)
2499	Z5, Y5, X5	500	10,000
	X7	250	10,000
357	Z5, Y5, X5	500	10,000
	X7	250	10,000

Notes:

- ♦ Turret Lead
- •• Typical Insertion Loss
- ∇ No Hex Nut Included

Please see Temperature Characteristics and EIA Codes on Page 25.

TUSONIX Part Number	MIL-PRF-15733 Number	Style	Notes	Circuit	Working Voltage (dc) 85°C	Working Voltage (dc) 125°C	Capacitance (pF)	Capacitance Tolerance	Current (A)	Minimum No-Load Insertion Loss (dB) at 25°C per MIL-Std-220 1MHz	10MHz	100MHz	1GHz	10GHz
C Configuration														
4401-005	--	2	∇	C	70	50	10,000	GMV	10	4	21	35	50	60
4401-006	--	2	∇	C	70	50	15,000	GMV	10	7	20	35	55	60
4401-010	--	2	∇	C	70	50	27,000	GMV	10	10	28	42	65	65
4401-011	--	2	∇	C	50	50	50,000	GMV	10	15	35	45	70	--
4401-003	--	2	∇	C	150	100	2700	GMV	10	--	10	25	40	50
4401-004	--	2	∇	C	150	100	5000	GMV	10	--	15	30	45	55
4401-680	--	2	∇	C	300	200	5	MAX	10	--	--	--	--	--
4401-008	--	2	∇	C	300	200	10	GMV	10	--	--	--	5	20
4401-009	--	2	∇	C	300	200	25	GMV	10	--	--	--	10	25
4401-000	--	2	∇	C	300	200	100	GMV	10	--	--	3	20	28
4401-001	--	2	∇	C	300	200	500	GMV	10	--	--	15	35	40
4401-007	--	2	∇	C	300	200	1000	GMV	10	--	5	20	35	45
4401-002	--	2	∇	C	300	200	1200	GMV	10	--	5	20	35	45
Pi Configuration														
4202-053	--	3	--	Pi	200	100	5000	GMV	10	--	20	65	70	70
4202-054	--	3	♦	Pi	200	100	5000	GMV	10	--	20	65	70	70
4204-050	--	1	--	Pi	200	100	5000	GMV	10	--	20	65	70	70
4204-051	--	1	♦	Pi	200	100	5000	GMV	10	--	20	65	70	70
4202-020	--	3	--	Pi	350	200	1500	GMV	10	--	5	45	70	70
4202-021	--	3	♦	Pi	350	200	1500	GMV	10	--	5	45	70	70
4204-000	--	1	--	Pi	350	200	1500	GMV	10	--	5	45	70	70
4204-001	--	1	♦	Pi	350	200	1500	GMV	10	--	5	45	70	70
4204-500	/61-0001	1	--	Pi	--	200dc 140ac	1500	GMV	10ac	--	--	45	70	70
4204-501	/43-0001	1	♦	Pi	--	200dc 140ac	1500	GMV	10ac	--	--	--	45	45
C Configuration														
2499-003-X5U0-102P	--	4	••	C	500	250	1000	+100-0%	20	--	3	20	35	40
2499-003-X5W0-502P	--	4	••	C	500	250	5000	+100-0%	20	--	15	30	45	50
2499-003-X5W0-103Z	--	4	••	C	500	250	10,000	+80-20%	20	--	20	35	50	55
357-001-X5W0-103Z	--	5	••	C	500	250	10,000	+80-20%	20	--	20	35	50	55

Drawings not to scale.

Please note: All bushing style filters include hex nut and lock washer unless otherwise specified.

7741 North Business Park Drive
Tucson, Arizona 85743
Ph: 520-744-0400 Fax: 520-744-6155
Web site: www.tusonix.com E-mail: sales@tusonix.com

#12-32 UNEF-2A Pi, & C Filters

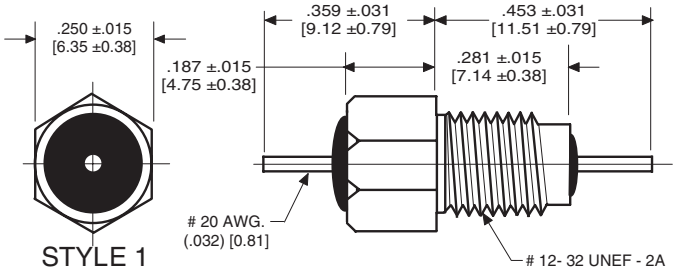

STYLE 1

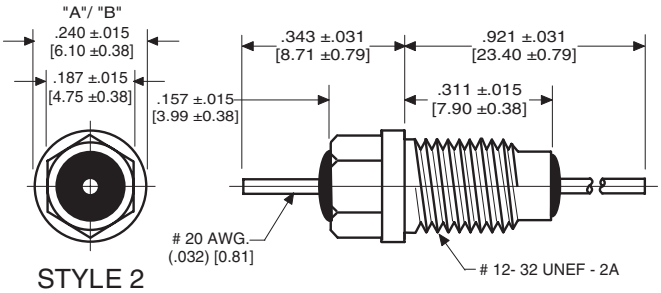

STYLE 2

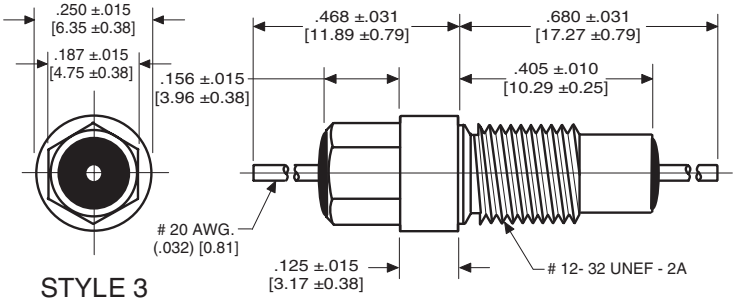

STYLE 3

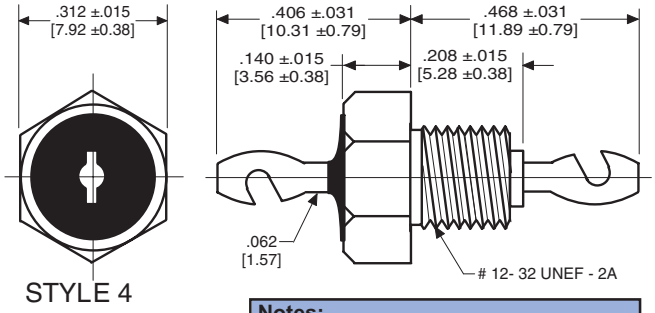

STYLE 4

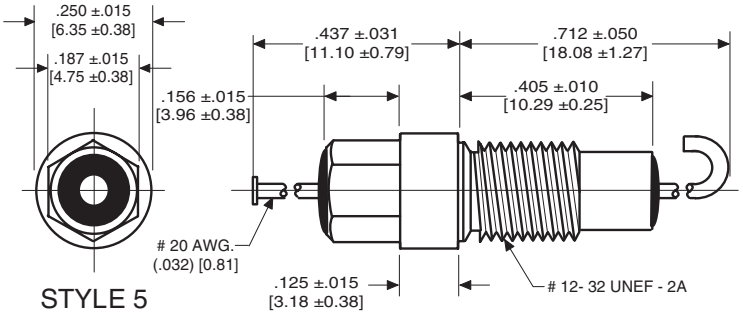

STYLE 5

inches
[mm]

Notes:

- ♦ Turret Lead
- ∇ #18 AWG Lead 0.040 [1.02] Dia.
- "A" Dim. A in #2= .250 ± .015 [6.35 ± 0.38]
- "B" Dim. A in #2= .235 ± .015 [5.97 ± 0.38]
- •• Typical Insertion Loss

TUSONIX Part Number	Temperature Range	WVdc	MAX. CAP. (Nominal) (pF)
2452	Z5, Y5, X5	500	1800
	X7	250	1800

Please see Temperature Characteristics and EIA Codes on page 25.

TUSONIX Part Number	MIL-PRF-15733 Number	Style	Notes	Circuit	Working Voltage (dc) 85°C	Working Voltage (dc) 125°C	Capacitance (pF)	Capacitance Tolerance	Current (A)	Minimum No-Load Insertion Loss (dB) at 25°C per MIL-Std-220 10MHz	100MHz	1GHz	10GHz
Pi Configuration													
4207-003	--	3	--	Pi	100	70	12,000	GMV	10	45	70	70	70
4253-002	--	3	--	Pi	100	70	50,000	GMV	10	60	75	75	75
4202-050	--	1	--	Pi	200	100	5000	GMV	10	20	65	70	70
4202-051	--	1	♦	Pi	200	100	5000	GMV	10	20	65	70	70
4203-050	--	2	--	Pi	200	100	5000	GMV	10	20	65	70	70
4203-051	--	2	♦	Pi	200	100	5000	GMV	10	20	65	70	70
4203-053	--	2	♦A	Pi	200	100	5000	GMV	10	20	65	70	70
4203-551	/61-0011	2	♦B	Pi	--	100dc 70ac	5000	GMV	10ac	--	65	70	70
4203-553	/61-0010	2	♦A	Pi	--	100dc 70ac	5000	GMV	10ac	--	65	70	70
4253-001	--	2	♦	Pi	--	100	25,000	GMV	10	30	65	70	70
4253-000	--	3	--	Pi	--	140	22,000	GMV	10	45	75	75	75
4202-000	--	1	--	Pi	350	200	1500	GMV	10	5	45	70	70
4203-000	--	2	--	Pi	350	200	1500	GMV	10	5	45	70	70
4202-001	--	1	♦	Pi	350	200	1500	GMV	10	5	45	70	70
4202-501	/61-0002	1	♦	Pi	--	200dc 140ac	1500	GMV	10ac	--	45	70	70
4203-003	--	2	♦A	Pi	350	200	1500	GMV	10	5	45	70	70
4203-501	/61-0006	2	♦B	Pi	--	200dc 140ac	1500	GMV	10ac	--	45	70	70
4203-552	/61-0007	2	♦A	Pi	--	100dc 70ac	5000	GMV	10ac	--	65	70	70
4207-000	--	5	--	Pi	500	300	1200	GMV	10	5	43	55	55
4207-001	--	5	--	Pi	500	300	4000	GMV	10	15	55	60	60
4202-004	--	1	∇	Pi	500	350	2500	GMV	15	5	50	70	70
C Configuration													
2452-000-X7R0-101M	--	4	••	C	500	250	100	±20%	20	--	3	20	28
2452-000-X7R0-471M	--	4	••	C	500	250	470	±20%	20	--	12	27	27
2452-000-X5U0-102P	--	4	••	C	500	250	1000	+100-0%	20	3	20	35	40

Drawings not to scale.

Please note: All bushing style filters include hex nut and lock washer unless otherwise specified.

The products listed in this catalog are only a few of the thousands of variations that TUSONIX produces. For custom component design, please contact the factory direct.

TUSONIX

1/4-28 and 5/16-24 UNF-2A and 5/16-32 UNEF-2A Pi Filters and Feed-Thru Capacitors

inches
[mm]

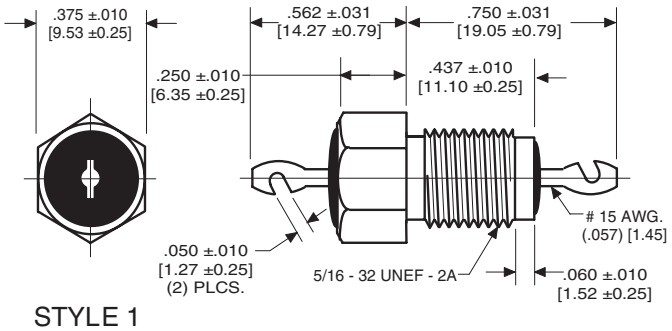

STYLE 1

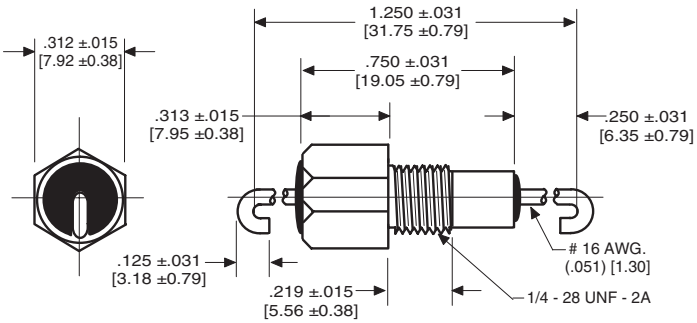

STYLE 2

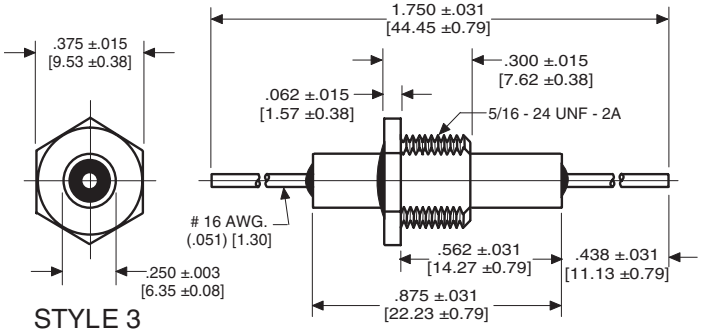

STYLE 3

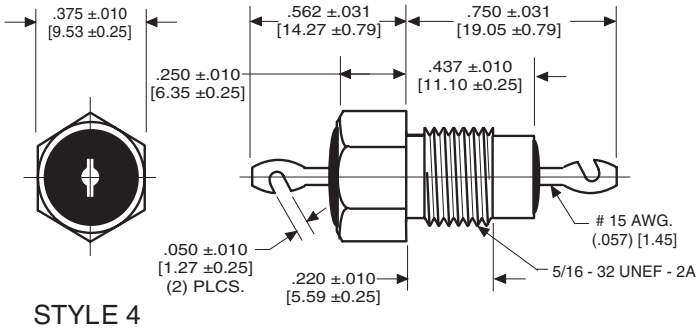

STYLE 4

TUSONIX Part Number	Temperature Range	WVDC	MAX. CAP. (Nominal) (pF)
327	Z5, Y5, X5	500	10,000
	X7	250	10,000
2432	Z5, Y5, X5	2000	7,000
	X7	1000	7,000

Please see Temperature Characteristics and EIA Codes on page 25.

Notes:

∇ 5/16-24 UNF-2A Thread
•• Typical Insertion Loss

TUSONIX Part Number	MIL-PRF-15733 Number	Style	Notes	Circuit	Working Voltage (dc) 85°C	Working Voltage (dc) 125°C	Capacitance (pF)	Capacitance Tolerance	Current (A)	Minimum No-Load Insertion Loss (dB) at 25°C per MIL-Std-220 10MHz	100MHz	1GHz	10GHz
C Configuration													
327-010-X5U0-102M	--	2	••	C	500	250	1000	±20%	20	3	20	35	40
327-010-X5U0-152M	--	2	••	C	500	250	1500	±20%	20	5	22	35	40
327-010-X5U0-502P	--	2	••	C	500	250	5000	+100-0%	20	15	30	45	50
327-010-X7W0-103Z	--	2	••	C	500	250	10,000	+80-20%	20	20	35	50	55
C Configuration													
2432-002-X5R0-101M	--	3	••	C	2000	1000	100	±20%	20	--	3	20	27
2432-002-X5S0-471M	--	3	••	C	2000	1000	470	±20%	20	--	12	27	27
2432-002-X5U0-502M	--	3	••	C	2000	1000	5000	±20%	20	15	30	45	50
2432-002-X5W0-752Z	--	3	••	C	2000	1000	7500	+80-20%	20	15	30	45	50
2432-002-X7R0-102M	--	3	••	C	2000	1000	1000	±20%	20	3	20	35	40
Pi Configuration													
4206-016	--	1	--	Pi	1000	--	1000	GMV	25	3	35	65	65
4206-501	/61-0004	4	--	Pi	--	500dc 350ac	2000	GMV	25ac	--	55	70	70
4206-502	/61-0003	4	∇	Pi	--	500dc 350ac	2000	GMV	25ac	--	55	70	70
4206-006	--	1	--	Pi	1000	500	3000	GMV	25	10	55	70	70

Drawings not to scale.

Please note: All bushing style filters include hex nut and lock washer unless otherwise specified.

7741 North Business Park Drive
Tucson, Arizona 85743
Ph: 520-744-0400 Fax: 520-744-6155
Web site: www.tusonix.com E-mail: sales@tusonix.com

Metric Bushing Filters

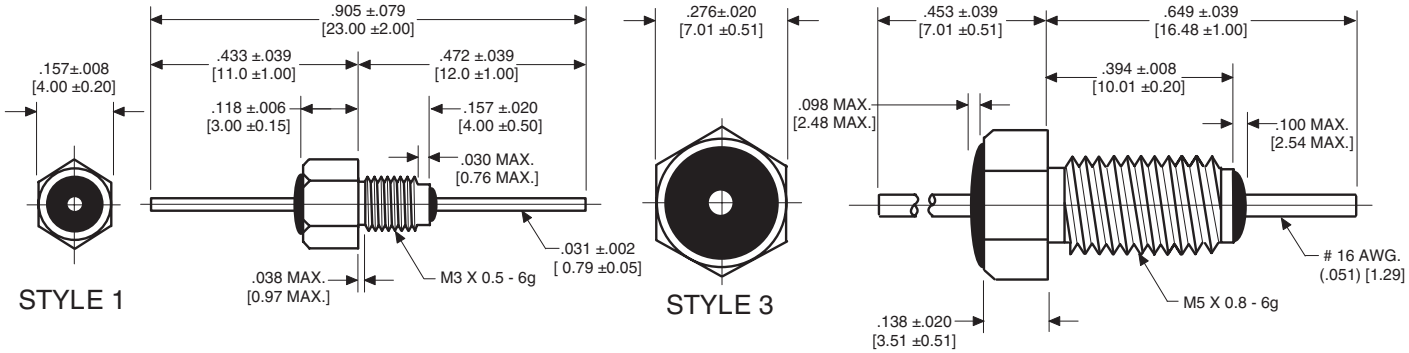

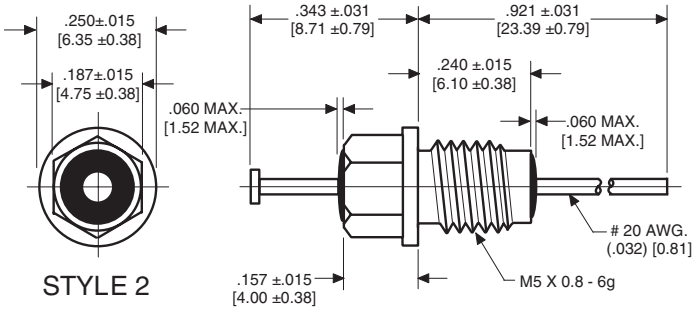

inches
[mm]

Series Number	Temperature Range	WVdc	MAX. CAP. Nominal (pF)
2499	Z5, Y5, X5	500	5000
	X7	250	5000

Please see Temperature Characteristics and EIA Codes on page 25.

Notes:	
••	Typical Insertion Loss

TUSONIX Part Number	Style	Notes	Circuit	Working Voltage (dc)		Capacitance (pF)	Capacitance Tolerance	Current (A)	Minimum No-Load Insertion Loss (dB) at 25°C per MIL-Std-220				
				85°C	125°C				1MHz	10MHz	100MHz	1GHz	10GHz
M3 Thread													
4400-093	1	--	C	70	50	10,000	+80-20%	10	4	20	35	50	50
4400-098	1	--	C	70	50	27,000	GMV	10	10	28	42	55	60
4400-099	1	--	C	50	50	50,000	GMV	10	15	35	45	70	--
4400-094	1	--	C	150	100	4700	GMV	10	--	15	30	45	55
4400-095	1	--	C	300	200	1000	GMV	10	--	5	20	35	45
4400-683	1	--	C	300	200	5	MAX	10	--	--	--	--	--
4400-076	1	--	C	300	200	100	GMV	10	--	--	3	20	28
4400-096	1	--	C	300	200	470	GMV	10	--	--	15	35	40
4400-097	1	--	C	150	100	2700	GMV	10	--	10	25	40	50
M5 Thread													
4209-053	2	--	Pi	350	100	5500	GMV	10	--	20	65	70	70
4209-003	2	--	Pi	350	200	1500	GMV	10	--	5	45	70	70
2499-523-Y5R0-102P	3	••	C	500	250	1000	+100-0%	20	--	3	20	35	40

Drawings not to scale. ***Please note:*** All bushing style filters include hex nut and lock washer unless otherwise specified.

The products listed in this catalog are only a few of the thousands of variations that TUSONIX produces. For custom component design, please contact the factory direct.

TUSONIX

Coaxial Broadband Filter 1/4-28 UNF-2A

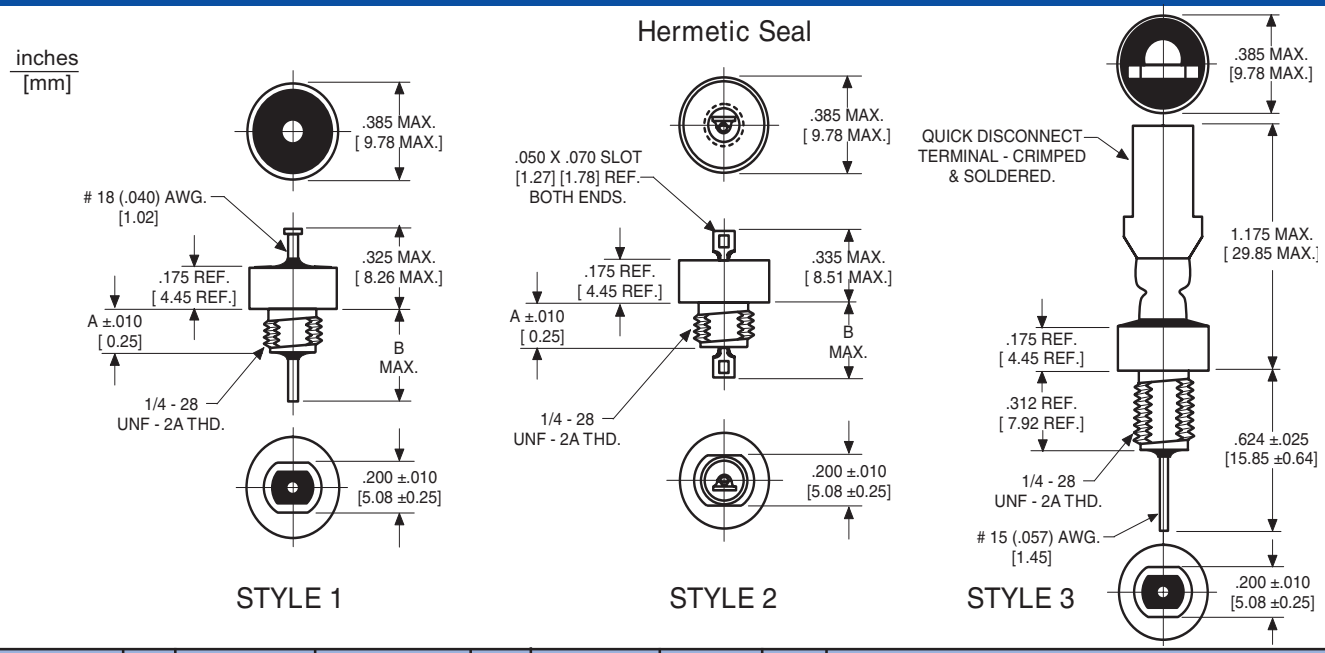

TUSONIX Part Number	Style	Dim. A inch [mm]	Dim. B inch [mm]	Circuit	Working Voltage (dc) 85°C	Working Voltage (dc) 125°C	Capacitance (pF)	Current (A)	Minimum No-Load Insertion Loss (dB) at 25°C per MIL-Std-220 30KHz	100KHz	300KHz	1MHz	10MHz	1GHz
X7W Temperature Characteristic														
4601-009	2	.187 [4.75]	.350 [8.89]	C	100	70	10pF Max	15	--	--	--	--	--	--
4600-005	1	.187 [4.75]	.367 [9.32]	C	100	70	0.7 µF	15	9	20	29	39	52	70
4600-006	1	.312 [7.93]	.492 [12.50]	C	100	70	0.7 µF	15	9	20	29	39	52	70
4601-005	2	.187 [4.75]	.350 [8.89]	C	100	70	0.7 µF	15	9	20	29	39	52	70
4601-006	2	.312 [7.93]	.475 [12.07]	C	100	70	0.7 µF	15	9	20	29	39	52	70
4600-000	1	.187 [4.75]	.367 [9.32]	C	100	70	1.4 µF	15	15	25	34	44	60	70
4600-002	1	.312 [7.93]	.492 [12.50]	C	100	70	1.4 µF	15	15	25	34	44	60	70
4601-000	2	.187 [4.75]	.350 [8.89]	C	100	70	1.4 µF	15	15	25	34	44	60	70
4601-002	2	.312 [7.93]	.475 [12.07]	C	100	70	1.4 µF	15	15	25	34	44	60	70
4600-055	1	.187 [4.75]	.367 [9.32]	L	100	70	0.7 µF	15	9	20	29	39	52	70
4600-056	1	.312 [7.93]	.492 [12.50]	L	100	70	0.7 µF	15	9	20	29	39	52	70
4601-055	2	.187 [4.75]	.350 [8.89]	L	100	70	0.7 µF	15	9	20	29	39	52	70
4601-056	2	.312 [7.93]	.475 [12.07]	L	100	70	0.7 µF	15	9	20	29	39	52	70
4600-050	1	.187 [4.75]	.367 [9.32]	L	100	70	1.4 µF	15	15	25	34	44	60	70
4600-052	1	.312 [7.93]	.492 [12.50]	L	100	70	1.4 µF	15	15	25	34	44	60	70
4601-050	2	.187 [4.75]	.350 [8.89]	L	100	70	1.4 µF	15	15	25	34	44	60	70
4601-052	2	.312 [7.93]	.475 [12.07]	L	100	70	1.4 µF	15	15	25	34	44	60	70
X7R Temperature Characteristic														
4600-007	1	.187 [4.75]	.367 [9.32]	C	100	70	0.7 µF	15	9	20	29	39	52	70
4600-008	1	.312 [7.93]	.492 [12.50]	C	100	70	0.7 µF	15	9	20	29	39	52	70
4601-007	2	.187 [4.75]	.350 [8.89]	C	100	70	0.7 µF	15	9	20	29	39	52	70
4601-008	2	.312 [7.93]	.475 [12.07]	C	100	70	0.7 µF	15	9	20	29	39	52	70
4600-003	1	.187 [4.75]	.367 [9.32]	C	100	50	1.4 µF	15	15	25	34	44	60	70
4600-004	1	.312 [7.93]	.492 [12.50]	C	100	70	1.4 µF	15	15	25	34	44	60	70
4601-003	2	.187 [4.75]	.350 [8.89]	C	100	50	1.4 µF	15	15	25	34	44	60	70
4601-004	2	.312 [7.93]	.475 [12.07]	C	100	50	1.4 µF	15	15	25	34	44	60	70
4600-009	1	.187 [4.75]	.367 [9.32]	C	280	200dc 125ac	.15 µF	15	--	7	15	25	40	60
4601-010	2	.187 [4.75]	.350 [8.89]	C	280	200dc 125ac	.15 µF	15	--	7	15	25	40	60
4600-057	1	.187 [4.75]	.367 [9.32]	L	100	70	0.7 µF	15	9	20	29	39	52	70
4600-058	1	.312 [7.93]	.492 [12.50]	L	100	70	0.7 µF	15	9	20	29	39	52	70
4601-057	2	.187 [4.75]	.350 [8.89]	L	100	70	0.7 µF	15	9	20	29	39	52	70
4601-058	2	.312 [7.93]	.475 [12.07]	L	100	70	0.7 µF	15	9	20	29	39	52	70
4600-053	1	.187 [4.75]	.367 [9.32]	L	100	50	1.4 µF	15	15	25	34	44	60	70
4600-054	1	.312 [7.93]	.492 [12.50]	L	100	50	1.4 µF	15	15	25	34	44	60	70
4601-053	2	.187 [4.75]	.350 [8.89]	L	100	50	1.4 µF	15	15	25	34	44	60	70
4601-054	2	.312 [7.93]	.475 [12.07]	L	100	50	1.4 µF	15	15	25	34	44	60	70
4600-059	1	.187 [4.75]	.367 [9.32]	L	280	200dc 125ac	.15 µF	15	--	7	15	25	40	60
4601-059	2	.187 [4.75]	.350 [8.89]	L	280	200dc 125ac	.15 µF	15	--	7	15	25	40	60

Drawings not to scale.

All bushing style filters include hex nut and lock washer unless otherwise noted.

TUSONIX

7741 North Business Park Drive
Tucson, Arizona 85743
Ph: 520-744-0400 Fax: 520-744-6155
Web site: www.tusonix.com E-mail: sales@tusonix.com

Coaxial Broadband Filter 1/4-28 UNF-2A and Standard Hardware Dimensions

Notes:

▲ 12 AWG .081[2.06] Lead and X7W Temp. Characteristic

TUSONIX Part Number	Style	Notes	Dim. A inch [mm]	Dim. B inch [mm]	Circuit	Working Voltage (dc) 85°C	Working Voltage (dc) 125°C	Capacitance (pF)	Current (A)	Minimum No-Load Insertion Loss (dB) at 25°C per MIL-Std-220 30KHz	100KHz	300KHz	1MHz	10MHz	1GHz
X7R Temperature Characteristic															
4600-014	3	--	--	--	C	100	70	0.7 µF	20	9	20	29	39	52	70
4600-015	3	--	--	--	C	100	50	1.4 µF	20	15	25	34	44	60	70
4600-016	3	--	--	--	C	280	200dc 125ac	.15 µF	20	--	7	15	25	40	60
4600-070	3	--	--	--	L	100	70	0.7 µF	20	9	20	29	39	40	70
4600-067	3	▲	--	--	L	100	70	1.2 µF	30	15	25	34	44	52	70
4600-071	3	--	--	--	L	100	50	1.4 µF	20	15	25	34	44	60	70
4600-072	3	--	--	--	L	280	200dc 125ac	.15 µF	20	--	7	15	25	60	60

STANDARD HARDWARE DIMENSIONS

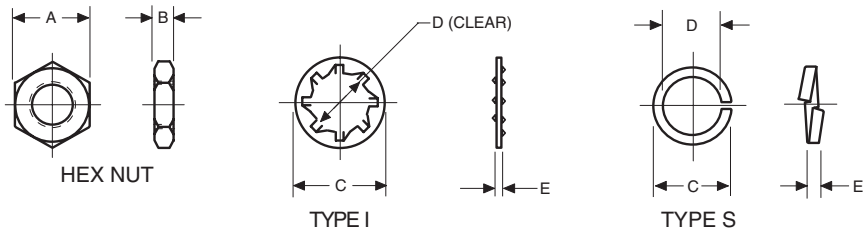

NUT THREAD SIZE	MOUNTING TORQUE LIMITS	HEX NUT A	HEX NUT B	TYPE	LOCK WASHER C	LOCK WASHER D	LOCK WASHER E
4-40 UNC	2 lb.in. [.226 N-m]	.187 [4.75]	.062 [1.57]	I	.220 [5.59]	.120 [3.05]	.015 [0.38]
6-32 UNC	2 lb.in. [.226 N-m]	.187 [4.75]	.062 [1.57]	I	.283 [7.19]	.146 [3.71]	.017 [0.43]
6-40 UNF	3 lb.in. [.339 N-m]	.187 [4.75]	.062 [1.57]	I	.283 [7.19]	.146 [3.71]	.017 [0.43]
8-32 UNC	5 lb.in. [.565 N-m]	.250 [6.35]	.075 [1.91]	I	.283 [7.19]	.167 [4.24]	.018 [0.46]
8-36 UNF	1lb.in. [.113 N-m]	--	--	I	.283 [7.19]	.167 [4.24]	.015 [0.38]
12-28 UNF	8 lb.in. [.904 N-m]	.250 [6.35] .250 [6.35]	.075 [1.91] .100 [2.54]	I	.387 [9.83]	.220 [5.59]	.022 [0.56]
12-32 UNEF	8 lb.in. [.904 N-m]	.250 [6.35]	.075 [1.91]	I	.387 [9.83]	.220 [5.59]	.022 [0.56]
1/4-28 UNF	8 lb.in. [.904 N-m]	.313 ± .015 [7.95 ± 0.38]	.125 ± .015 [3.18 ± 0.38]	I	.387 [9.83]	.220 [5.59]	.022 [0.56]
5/16-24 UNF	9 lb.in. [1.02 N-m]	.375 ± .010 [9.53 ± 0.25]	.090 [2.29]	I	.420 [10.6]	.262 [6.65]	.025 [0.63]
5/16-32 UNEF	9 lb.in. [1.02 N-m]	.375 ± .010 [9.53 ± 0.25]	.090 [2.29]	I	.430[10.92]	.318 [8.08]	.022 [0.56]
3/8-32 UNEF	9 lb.in. [1.02 N-m]	.500 ± .010 [12.7 ± 0.25]	.090 [2.29]	I	.430 [10.92]	.318 [8.08]	.022 [0.56]
M3 X 0.5	2 lb.in. [.226 N-m]	.187 ± .010 [4.75 ± 0.25]	.062 [1.57]	I	.500 [12.70]	.384 [9.75]	.022 [0.56]
M5 X 0.8 6g	7 lb.in. [.790 N-m]	.250 [6.35]	.075 [1.91]	S	.192 [4.88]	.118 [2.99]	.025 [0.63]
				S	.277 [7.04]	.172 [4.37]	.034 [0.86]
				S	.361 [9.17]	.225 [5.72]	.050 [1.27]

Characteristics

1. Dimensions: Inches [metric]
   Dimensional Tolerance:
   ± .005 [0.13], thread tolerance class 2.
2. Standard finish: Silver
3. Nut material: Brass
   Washer material: Phosphor Bronze
4. When mounting filter without hardware, into tapped hole, the mounting torque applied to the filter body must be no more than 1/2 the torque limits listed on the chart to the left.

PRODUCT INSTALLATION RECOMMENDATIONS

The components in this catalog are manufactured with ceramic dielectrics. To minimize possible damage to the components during installation, the recommendations below should be followed. For information concerning other installation requirements and/or component modifications, consult TUSONIX Customer Engineering at (520) 744-0400.

General Recommendations

Handling: Excessive force or direct impact to the component may result in breakage. Lead bending or cutting, if necessary, should be done with a support for the lead to prevent mechanical stress to the component. Components with required lead modifications are available from TUSONIX.

Lead Soldering: Use a temperature controlled soldering iron with SN60 or SN63 RMA Flux core wire. Maximum soldering temperature to be 500°F(260°C) with a dwell time of 3 seconds maximum. The use of a heat sink between the component body and the solder joint is highly recommended.

Flux Removal: Optimum flux removal can be achieved by vapor degreasing the components immediately after the soldering operation. Total immersion of the components is not recommended.

Solder Mount Recommendations

Mounting: Use a convection or infrared oven and SN60 or SN63 solder paste, or solder preforms, with RMA Flux. The oven profile should slowly heat the entire assembly to a reflow temperature of 430°F (221°C), with a rate of change not to exceed 5°F,3°C/Sec. and a dwell time as short as possible.

Internal Electrode Soldering: Use a temperature controlled soldering iron with SN62 silver bearing (2%) RMA Flux core solder wire. The components should be preheated to 300°F (150°C), then soldered with a maximum temperature of 500°F (260°C) and a dwell of 3 seconds maximum.

Bushing Mount Recommendations

For Mounting Torque, please see standard hardware dimensions table on page 24.

EIA/Tusonix Tolerance Codes

TEMPERATURE CHARACTERISTICS	
EIA Code	Temperature Range
Z5	+10°C to +85°C
Y5	-30°C to +85°C
X5	-55°C to +85°C
X7	-55°C to +125°C
EIA Code	Maximum Cap. Change
D	± 3.3%
E	± 4.7%
F	± 7.5%
P	± 10%
R	± 15%
S	± 22%
T	+ 22% -33%
U	+ 22% -56%
V	+ 22% -82%
W	+ 22% -90%

CAPACITANCE TOLERANCE		
Nominal Capacitnce 10 pF or Less	Code	Nominal Capacitnce over 10 pF
GMV◆	AA	GMV◆
	A	+50% -20%
± 0.1 pF	B	± 0.10%
± 0.25 pF	C	± 0.25%
± 0.5 pF	D	± 0.50%
± 0.3 pF	E	+70% -30%
± 1 pF	F	± 1%
± 2 pF	G	± 2%
± 3%	H	± 3%
	I	+60% -40%
± 5%	J	± 5%
± 10%	K	± 10%
± 2%	L	+100% -40%

CAPACITANCE TOLERANCE (Cont.)		
Nominal Capacitnce 10 pF or Less	Code	Nominal Capacitnce over 10 pF
± 20%	M	± 20%
± 0.4 pF	N	± 30%
	P	+100% -0%
± 0.2 pF	Q	± 15%
	R	± 2.5%
	S	+50% -15%
	T	+30% -20%
	U	+80% -0%
	V	± 7%
	W	+50% -30%
MAX.	X	+40% -10%
	Y	+50% -0%
	Z	+80% -20%

◆GMV: TUSONIX Code: Guarantied Minimum Value

Please note: Maximum Capacitance for each part number is determined by the required operating temperature range and maximum capacitance change.

7741 North Business Park Drive
Tucson, Arizona 85743
Ph: 520-744-0400 Fax: 520-744-6155
Web site: www.tusonix.com E-mail: sales@tusonix.com

General Test Specifications

The Components shown in this catalog have been designed and subjected to the following test plan, as is applicable for the individual components. The information shown can be used as a basis for component specifications. For additional information, please consult Customer Engineering at (520) 744-0400.

Filters governed by MIL-PRF-15733 shall be inspected and tested to the requirements of the specification and the applicable specification (slash) sheet.

LOT ACCEPTANCE INSPECTION:

INSPECTION OR TEST	TEST METHOD PER MIL-STD-202 EXCEPT AS NOTED	POST TEST REQUIREMENTS
Visual and Mechanical		In accordance with applicable requirements
Materials, Design, Construction and Workmanship		
Physical Dimensions & Marking		
Seal (4601 Style Only)	Method 112, condition A	No leaks
Capacitance	Method 305, 1KHz, 1±0.2 VRMS max. +25°C	Within specified tolerance
Dissipation Factor (1/Q)	Method 306, 1KHz, 1±0.2 VRMS max. +25°C	4.0% max
Dielectric Withstanding Voltage	Method 301, 2 seconds, 50 mA max. surge current, 2 times WVDC.	No evidence of damage or break down.
Insulation Resistance	Method 302, 50 mA max. charging current, 100VDC, 2 minutes or as specified by individual variation	Greater than 10,000 Megohms or 100 Ohm-Farads, whichever is less.
Insertion Loss	MIL-STD-220, 50 Ohms, +25°C, no load	Per application requirements.
DC Resistance (4601 Style Only)	MIL-PRF-15733	0.01 Ohms max.
Solderability (5pcs)	Method 208	Per applicable requirements.

PERIODIC QUALITY CONFORMANCE INSPECTION:

A periodic quality conformance inspection program consisting of environmental and reliability testing is in place to ensure that product integrity is consistently maintained.

TUSONIX on-line www.tusonix.com

The TUSONIX Web site provides visitors with a wide range of product and ordering information. At **www.tusonix.com,** customers can view product information and download catalogs in Adobe Acrobat® .pdf format. Customers can also view or link to Sales Offices, International Agents and Distributors. An on-line request form allows customers to immediately specify product requirements and request product information.

Компания «ЭлектроПласт» предлагает заключение долгосрочных отношений при поставках импортных электронных компонентов на взаимовыгодных условиях!

Наши преимущества:

- Оперативные поставки широкого спектра электронных компонентов отечественного и импортного производства напрямую от производителей и с крупнейших мировых складов;
- Поставка более 17-ти миллионов наименований электронных компонентов;
- Поставка сложных, дефицитных, либо снятых с производства позиций;
- Оперативные сроки поставки под заказ (от 5 рабочих дней);
- Экспресс доставка в любую точку России;
- Техническая поддержка проекта, помощь в подборе аналогов, поставка прототипов;
- Система менеджмента качества сертифицирована по Международному стандарту ISO 9001;
- Лицензия ФСБ на осуществление работ с использованием сведений, составляющих государственную тайну;
- Поставка специализированных компонентов (Xilinx, Altera, Analog Devices, Intersil, Interpoint, Microsemi, Aeroflex, Peregrine, Syfer, Eurofarad, Texas Instrument, Miteq, Cobham, E2V, MA-COM, Hittite, Mini-Circuits,General Dynamics и др.);

Помимо этого, одним из направлений компании «ЭлектроПласт» является направление «Источники питания». Мы предлагаем Вам помощь Конструкторского отдела:

- Подбор оптимального решения, техническое обоснование при выборе компонента;
- Подбор аналогов;
- Консультации по применению компонента;
- Поставка образцов и прототипов;
- Техническая поддержка проекта;
- Защита от снятия компонента с производства.

Как с нами связаться

Телефон: 8 (812) 309 58 32 (многоканальный)
Факс: 8 (812) 320-02-42
Электронная почта: org@eplast1.ru
Адрес: 198099, г. Санкт-Петербург, ул. Калинина, дом 2, корпус 4, литера А.