VOLTAGE DETECTOR AZ70XX

General Description

The AZ70XX series ICs are under voltage detectors with a built in voltage threshold and low power consumption. The AZ70XX are specifically designed to accurately monitor power supplies.

The AZ70XX use a precision on-chip voltage reference and a comparator to measure the input operating voltage. These ICs can accurately reset the system after detecting voltage at the time of switching power on and instantaneous power off in various CPU systems and other logic systems. The detect voltage thresholds are 2.3V/2.5V/2.7V/2.9V/3.1V/3.3V/4.2V/4.5V for AZ7023/25/27/29/31/33/42/45 respectively. Built in hysteresis helps to prevent erratic operation in the presence of noise.

The AZ70XX series are available in 2 standard packages: TO-92 (bulk or ammo packing) and SOT-89.

Features

- Low Current Consumption:
  I_{CCL}=300μA Typical
  I_{CCH}=30μA Typical
- Low Minimum Operating Voltage for Output Resetting: 0.8V Typical
- Built in Hysteresis Voltage: 50mV Typical
- Open Collector Output
- Extended Temperature Range: -40 to 85°C

Applications

- Low Battery Voltage Detector
- Power Fail Indicator
- Processor Reset Generator
- Battery Backup Control
- Home Electric Appliances

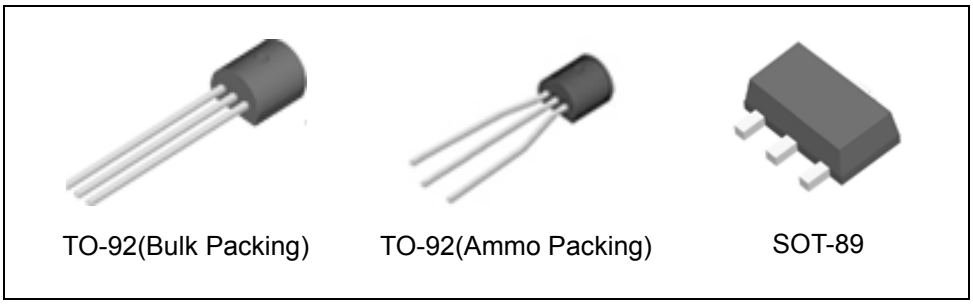

Figure 1. Package Types of AZ70XX

Pin Configuration

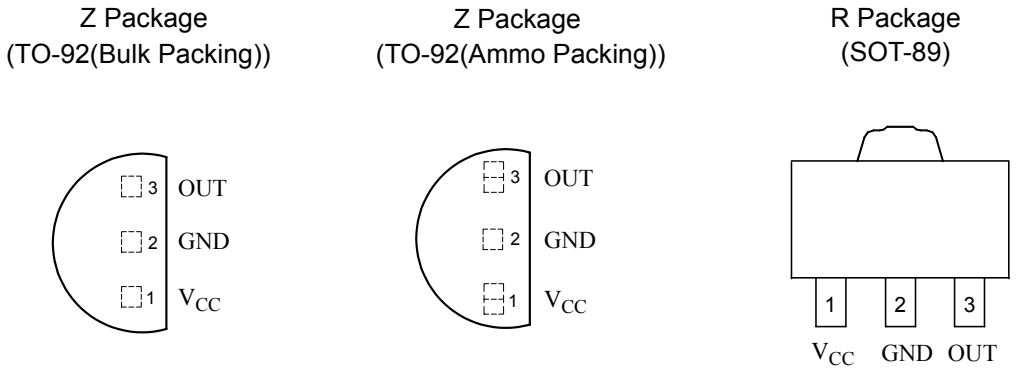

Figure 2. Pin Configuration of AZ70XX (Top View)

Functional Block Diagram

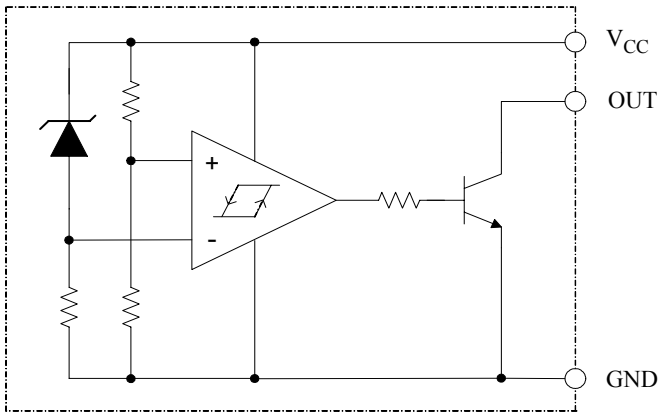

Figure 3. Functional Block Diagram of AZ70XX

Ordering Information

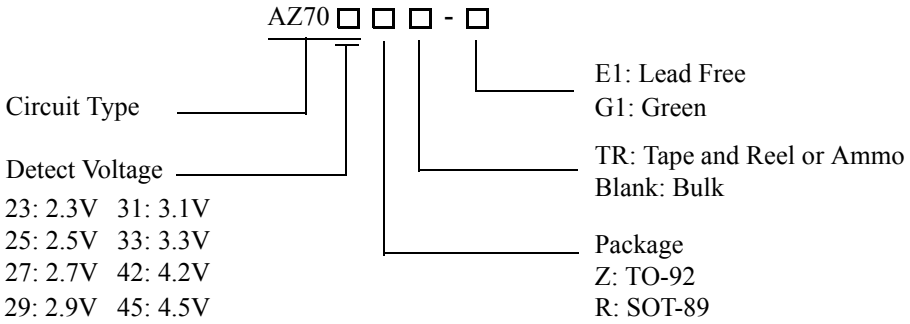

Package	Temperature Range	Detect Voltage	Part Number		Marking ID		Packing Type
			Lead Free	Green	Lead Free	Green	
TO-92	-40 to 85°C	2.3V	AZ7023Z-E1	AZ7023Z-G1	AZ7023Z-E1	AZ7023Z-G1	Bulk
			AZ7023ZTR-E1	AZ7023ZTR-G1	AZ7023Z-E1	AZ7023Z-G1	Ammo
		2.5V	AZ7025Z-E1	AZ7025Z-G1	AZ7025Z-E1	AZ7025Z-G1	Bulk
			AZ7025ZTR-E1	AZ7025ZTR-G1	AZ7025Z-E1	AZ7025Z-G1	Ammo
		2.7V	AZ7027Z-E1	AZ7027Z-G1	AZ7027Z-E1	AZ7027Z-G1	Bulk
			AZ7027ZTR-E1	AZ7027ZTR-G1	AZ7027Z-E1	AZ7027Z-G1	Ammo
		2.9V	AZ7029Z-E1	AZ7029Z-G1	AZ7029Z-E1	AZ7029Z-G1	Bulk
			AZ7029ZTR-E1	AZ7029ZTR-G1	AZ7029Z-E1	AZ7029Z-G1	Ammo
		3.1V	AZ7031Z-E1	AZ7031Z-G1	AZ7031Z-E1	AZ7031Z-G1	Bulk
			AZ7031ZTR-E1	AZ7031ZTR-G1	AZ7031Z-E1	AZ7031Z-G1	Ammo
		3.3V	AZ7033Z-E1	AZ7033Z-G1	AZ7033Z-E1	AZ7033Z-G1	Bulk
			AZ7033ZTR-E1	AZ7033ZTR-G1	AZ7033Z-E1	AZ7033Z-G1	Ammo
		4.2V	AZ7042Z-E1	AZ7042Z-G1	AZ7042Z-E1	AZ7042Z-G1	Bulk
			AZ7042ZTR-E1	AZ7042ZTR-G1	AZ7042Z-E1	AZ7042Z-G1	Ammo
		4.5V	AZ7045Z-E1	AZ7045Z-G1	AZ7045Z-E1	AZ7045Z-G1	Bulk
			AZ7045ZTR-E1	AZ7045ZTR-G1	AZ7045Z-E1	AZ7045Z-G1	Ammo
SOT-89	-40 to 85°C	2.3V	AZ7023RTR-E1	AZ7023RTR-G1	E723	G70A	Tape & Reel
		2.5V	AZ7025RTR-E1	AZ7025RTR-G1	E725	G70G	Tape & Reel
		2.7V	AZ7027RTR-E1	AZ7027RTR-G1	E727	G70B	Tape & Reel
		2.9V	AZ7029RTR-E1	AZ7029RTR-G1	E729	G70C	Tape & Reel
		3.1V	AZ7031RTR-E1	AZ7031RTR-G1	E731	G70H	Tape & Reel
		3.3V	AZ7033RTR-E1	AZ7033RTR-G1	E733	G70D	Tape & Reel
		4.2V	AZ7042RTR-E1	AZ7042RTR-G1	E742	G70E	Tape & Reel
		4.5V	AZ7045RTR-E1	AZ7045RTR-G1	E745	G70F	Tape & Reel

BCD Semiconductor's Pb-free products, as designated with "E1" suffix in the part number, are RoHS compliant. Products with "G1" suffix are available in green packages.

Absolute Maximum Ratings (Note 1)

Parameter	Symbol	Value	Unit
Supply Voltage	V_{CC}	-0.3 to 20	V
Power Dissipation (Package Limitations, T_A=25°C)	P_D	TO-92 Package: 400	mW
		SOT-89 Package: 500	
Operating Junction Temperature	T_J	150	°C
Storage Temperature Range	T_{STG}	-65 to 150	°C

Note 1: Stresses greater than those listed under "Absolute Maximum Ratings" may cause permanent damage to the device. These are stress ratings only, and functional operation of the device at these or any other conditions beyond those indicated under"Recommended Operating Conditions" is not implied. Exposure to "Absolute Maximum Ratings" for extended periods may affect device reliability.

Recommended Operating Conditions

Parameter	Symbol	Min	Max	Unit
Supply Voltage	V_{CC}		18	V
Operating Temperature Range	T_A	-40	85	°C

Electrical Characteristics

T_A=25°C, unless otherwise specified.

Parameter	Symbol	Conditions		Min	Typ	Max	Unit
Detect Voltage	V_{DET}	R_L=200Ω (Note 2) V_{OL} ≤ 0.4V	AZ7023R/Z	2.15	2.3	2.45	V
			AZ7025R/Z	2.35	2.5	2.65	
			AZ7027R/Z	2.55	2.7	2.85	
			AZ7029R/Z	2.75	2.9	3.05	
			AZ7031R/Z	2.95	3.1	3.25	
			AZ7033R/Z	3.15	3.3	3.45	
			AZ7042R/Z	4.05	4.2	4.35	
			AZ7045R/Z	4.35	4.5	4.65	
Low-level Output Voltage	V_{OL}	V_{CC}=V_{DET}(min)-0.05V R_L=200Ω (Note 2)				0.4	V
Output Leakage Current	I_{OH}	V_{CC}=18V				0.1	μA
Hysteresis Voltage	V_{HYS}	R_L=200Ω (Note 2)		30	50	100	mV
Detect Voltage Temperature Coefficient	$\Delta V_{DET}/(V_{DET} \times \Delta T)$	R_L=200Ω (Note 2)			±0.01		% /°C
Circuit Current at On Time	I_{CCL}	V_{CC}=V_{DET}(min)-0.05V			300	500	μA
Circuit Current at Off Time	I_{CCH}	V_{CC}=5.25V			30	50	μA
Minimum Operating Voltage	V_{OPR}	R_L=200Ω (Note 2) V_{OL} ≤ 0.4V			0.8		V
"L" Transmission Delay Time	tpHL	V_{CC} changed from 5.25V to V_{DET}(min)-0.05V, R_L=1.0KΩ, C_L=100p (Note 3)			10		μs
"H" Transmission Delay Time	tpLH	V_{CC} changed from V_{DET}(min)-0.05V to 5.25V, R_L=1.0KΩ, C_L=100p (Note 3)			15		μs
Output Current at On Time	I_{OL} I	V_{CC}=V_{DET}(min)-0.05V T_A=25°C (Note 4)		20			mA
	I_{OL} II	V_{CC}=V_{DET}(min)-0.05V T_A=-40 to 85 °C (Note 4)		16			
Thermal Resistance (Junction to Case)	θ_{JC}	TO-92			72		°C/W
		SOT-89			74		

Note 2: See test circuit 1 and Figure 12.
Note 3: See test circuit 2 and Figure 12.
Note 4: See test circuit 3. Adjusting the regulative power source until the reading value of voltage meter V is 0.4V, the reading value of current meter A is defined as "Output Current at On Time".

Electrical Characteristics (Continued)

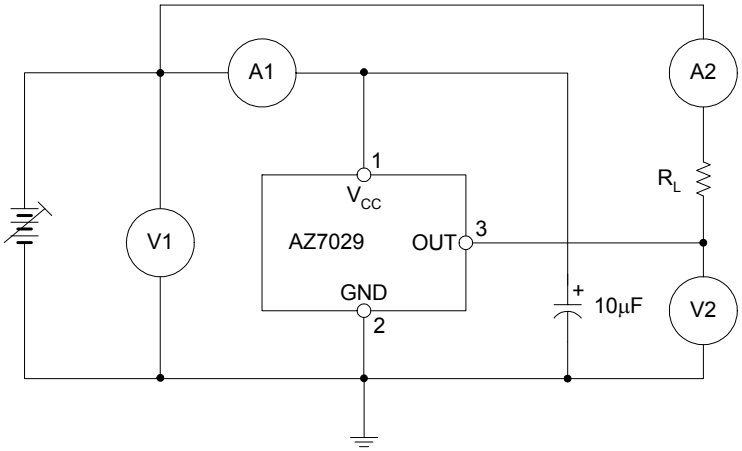

Figure 4. Test Circuit 1

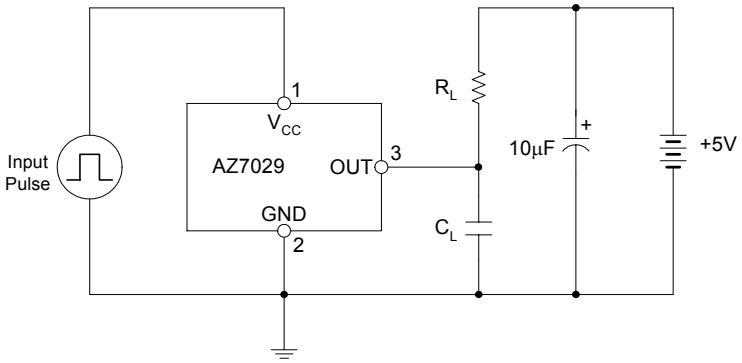

Figure 5. Test Circuit 2

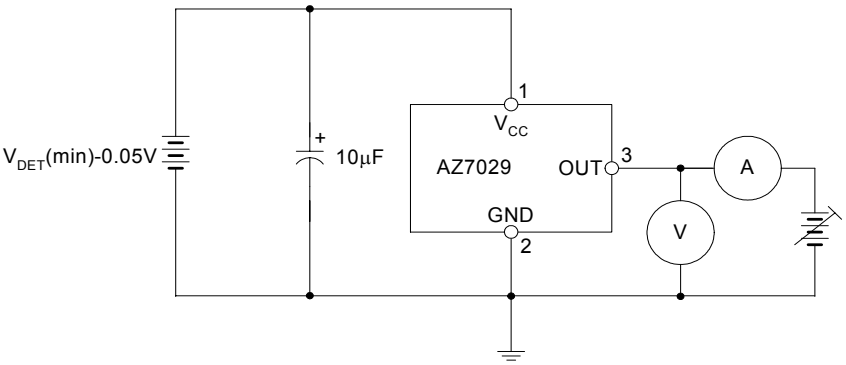

Figure 6. Test Circuit 3

Typical Performance Characteristics

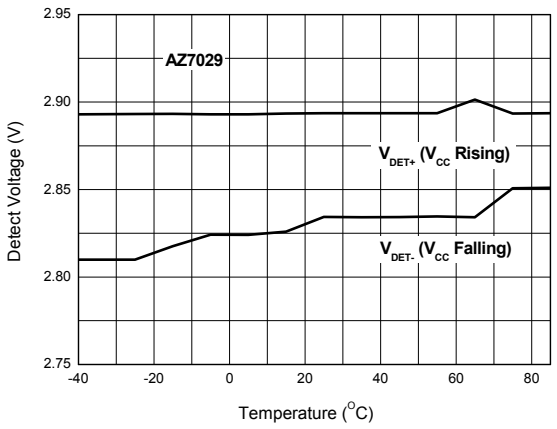

Figure 7. Detect Voltage vs. Temperature

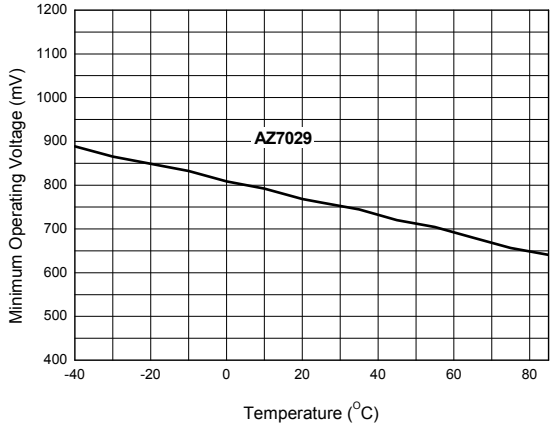

Figure 8. Minimum Operating Voltage vs. Temperature

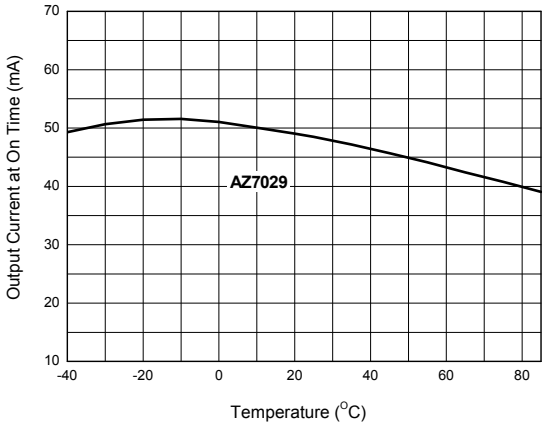

Figure 9. Output Current at On Time vs. Temperature

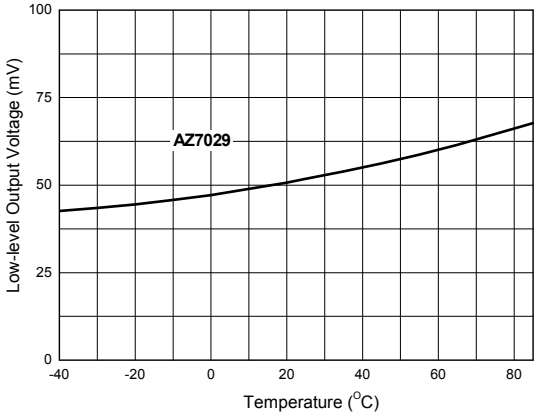

Figure 10. Low-level Output Voltage vs. Temperature

Typical Performance Characteristics (Continued)

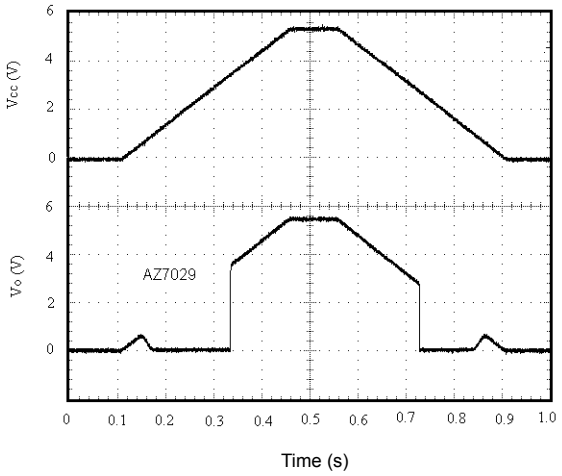

Figure 11. Output Voltage Dynamic Response when V_{CC} Increases and Decreases

Operating Diagram

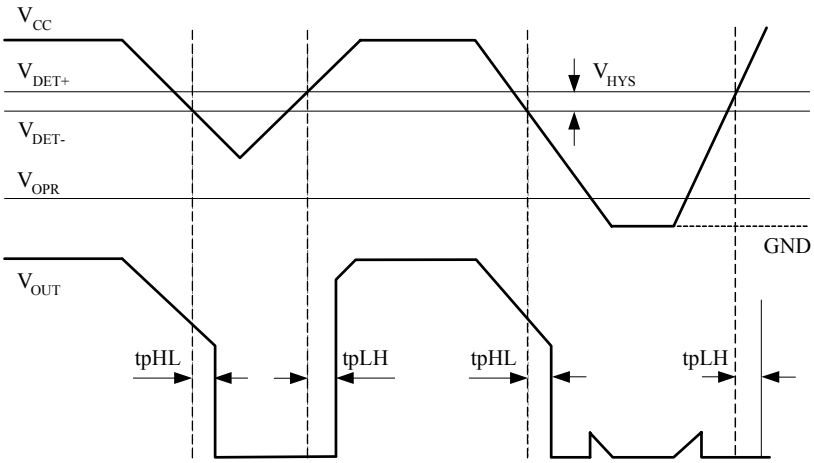

Figure 12. AZ70XX Timing Waveform (Note 5)

Note 5: Detect voltage: V_{DET-}
Hysteresis voltage (V_{HYS}): V_{DET+}-V_{DET-}
Release voltage: V_{DET+}
Minimum operating voltage: V_{OPR}

Operating Diagram (Continued)

Figure 12 is a typical timing waveform for AZ70XX. In normal steady-state operation when $V_{CC}>V_{DET-}$, the output will be in a logic high state and V_{OUT} is dependent upon the voltage that the pull-up resistor connected to.

Here is some explanations for AZ70XX's operation.

1. When the input voltage V_{CC} falls below V_{DET-}, the output will pull down to logic low after a delay time of tpHL. In general, at rated output current and V_{CC}, V_{OUT} can be pulled down to a voltage as low as within 0.4V from GND. (See the Electrical Characteristics section). The voltage level V_{DET-} means the detect voltage.

2. The output, V_{OUT}, will stay valid until V_{CC} falls below the minimum operating voltage, V_{OPR} (0.8V typical). Below minimum operating voltage, the output is undefined.

3. During power-up, V_{OUT} will remain undefined until V_{CC} rises above V_{OPR}, at which time the output will become valid. V_{OUT} will be in its active low state while $V_{OPR}<V_{CC}<V_{DET+}$ ($V_{DET+}=V_{DET-}+V_{HYS}$). V_{DET+} is the release voltage. V_{HYS} means the hysteresis voltage and is the difference voltage between the V_{DET+} and V_{DET-}.

4. When V_{CC} rises above V_{DET+}, the output will be in its inactive state. After a delay time of tpLH, V_{OUT} will be in its logic high state .

Typical Applications

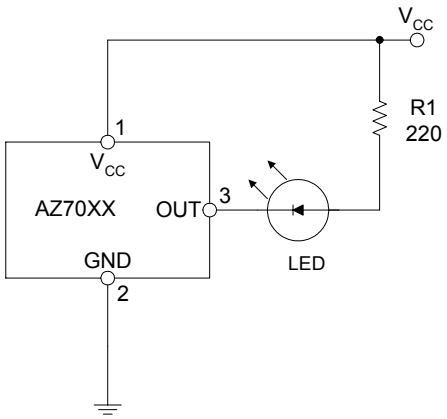

Figure 13. Low Voltage Indicator

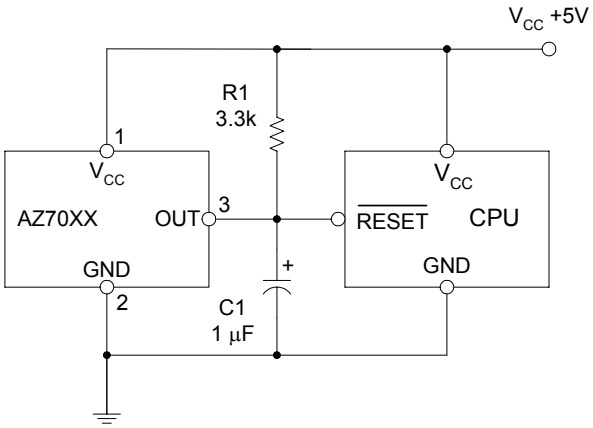

Figure 14. CPU Resetting Circuit

Mechanical Dimensions

TO-92(Bulk Packing) **Unit: mm(inch)**

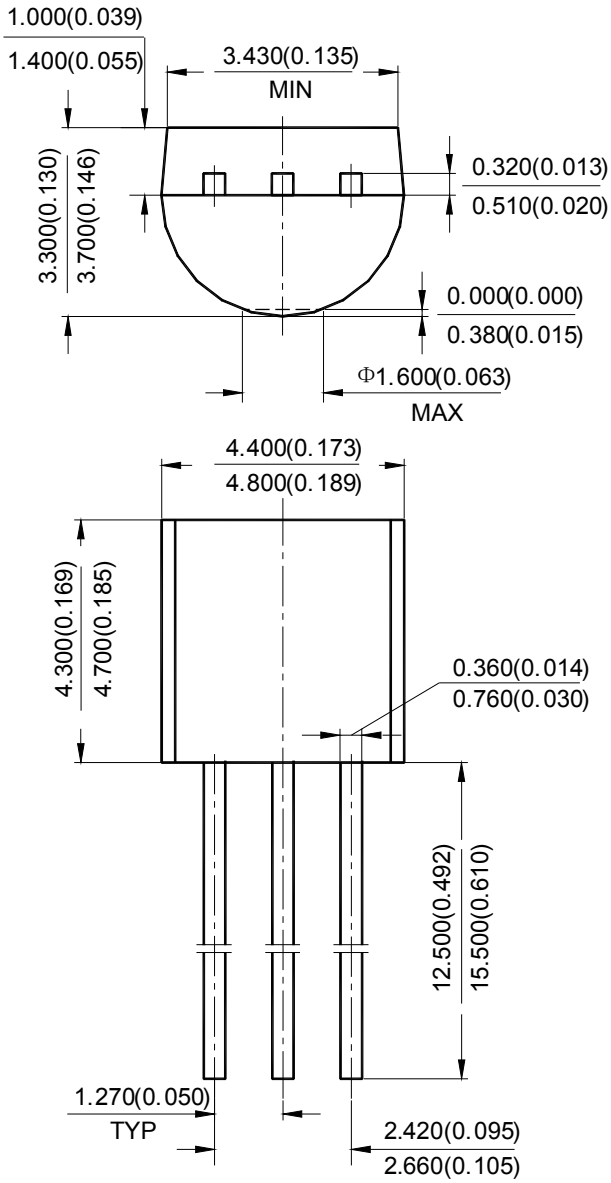

Mechanical Dimensions (Continued)

TO-92(Ammo Packing) **Unit: mm(inch)**

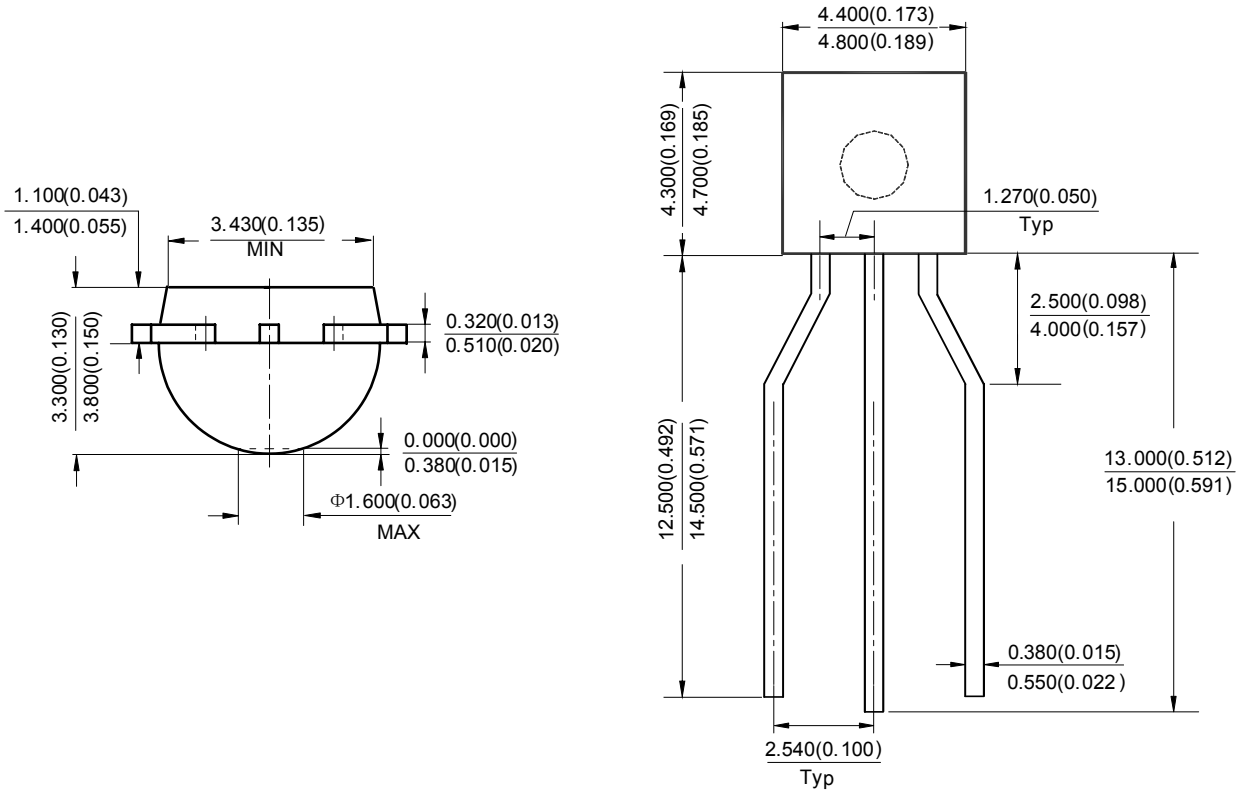

Mechanical Dimensions (Continued)

SOT-89 **Unit: mm(inch)**

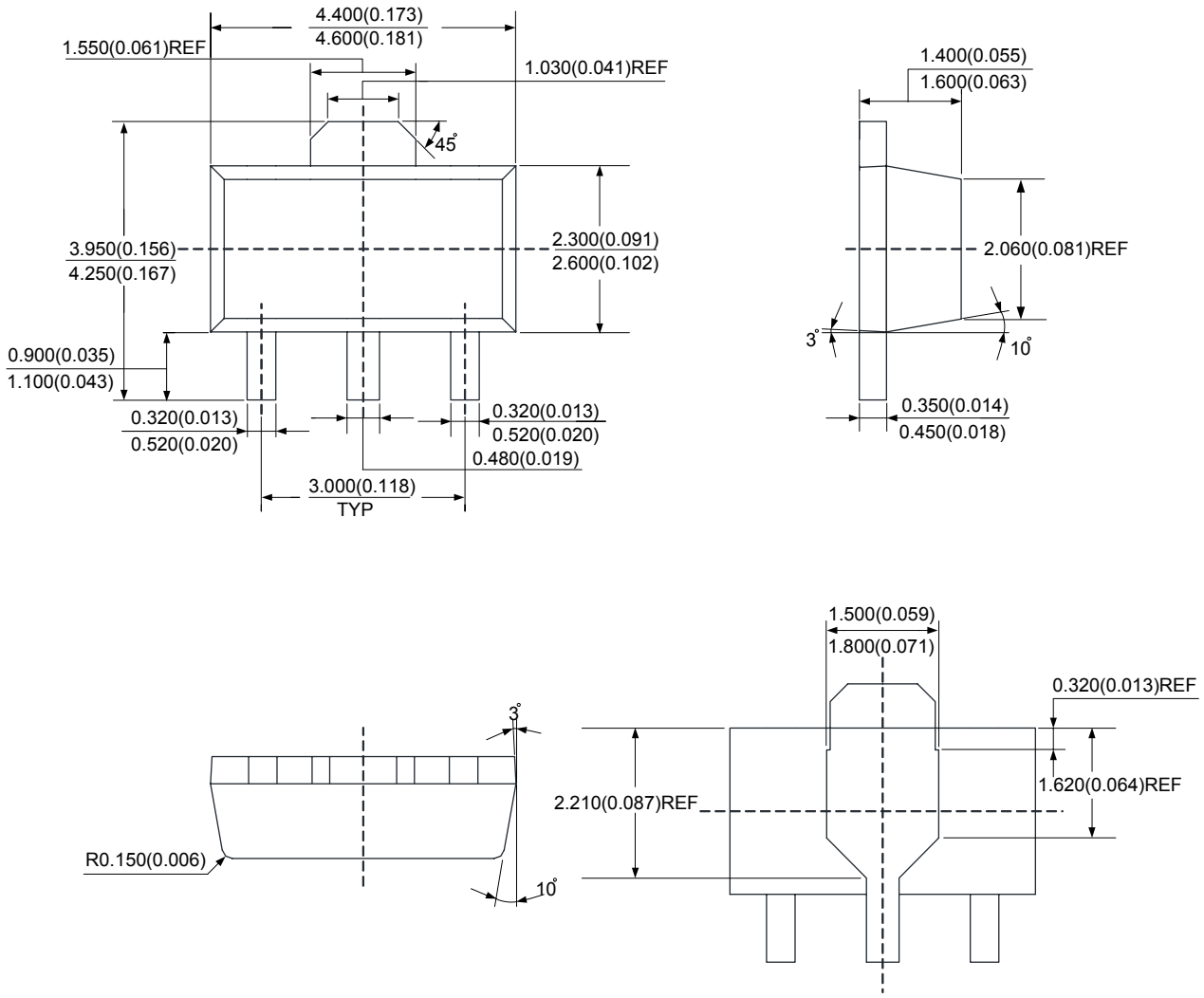

BCD Semiconductor Manufacturing Limited

http://www.bcdsemi.com

IMPORTANT NOTICE

BCD Semiconductor Manufacturing Limited reserves the right to make changes without further notice to any products or specifications herein. BCD Semiconductor Manufacturing Limited does not assume any responsibility for use of any its products for any particular purpose, nor does BCD Semiconductor Manufacturing Limited assume any liability arising out of the application or use of any its products or circuits. BCD Semiconductor Manufacturing Limited does not convey any license under its patent rights or other rights nor the rights of others.

MAIN SITE

- Headquarters
BCD Semiconductor Manufacturing Limited
No. 1600, Zi Xing Road, Shanghai ZiZhu Science-based Industrial Park, 200241, China
Tel: +86-21-24162266, Fax: +86-21-24162277

- Wafer Fab
Shanghai SIM-BCD Semiconductor Manufacturing Co., Ltd.
800 Yi Shan Road, Shanghai 200233, China
Tel: +86-21-6485 1491, Fax: +86-21-5450 0008

REGIONAL SALES OFFICE

Shenzhen Office
Shanghai SIM-BCD Semiconductor Manufacturing Co., Ltd., Shenzhen Office
Unit A Room 1203, Skyworth Bldg., Gaoxin Ave.1.S., Nanshan District, Shenzhen, China
Tel: +86-755-8826 7951
Fax: +86-755-8826 7865

Taiwan Office
BCD Semiconductor (Taiwan) Company Limited
4F, 298-1, Rui Guang Road, Nei-Hu District, Taipei, Taiwan
Tel: +886-2-2656 2808
Fax: +886-2-2656 2806

USA Office
BCD Semiconductor Corp.
30920 Huntwood Ave. Hayward, CA 94544, USA
Tel : +1-510-324-2988
Fax: +1-510-324-2788

Компания «ЭлектроПласт» предлагает заключение долгосрочных отношений при поставках импортных электронных компонентов на взаимовыгодных условиях!

Наши преимущества:

- Оперативные поставки широкого спектра электронных компонентов отечественного и импортного производства напрямую от производителей и с крупнейших мировых складов;
- Поставка более 17-ти миллионов наименований электронных компонентов;
- Поставка сложных, дефицитных, либо снятых с производства позиций;
- Оперативные сроки поставки под заказ (от 5 рабочих дней);
- Экспресс доставка в любую точку России;
- Техническая поддержка проекта, помощь в подборе аналогов, поставка прототипов;
- Система менеджмента качества сертифицирована по Международному стандарту ISO 9001;
- Лицензия ФСБ на осуществление работ с использованием сведений, составляющих государственную тайну;
- Поставка специализированных компонентов (Xilinx, Altera, Analog Devices, Intersil, Interpoint, Microsemi, Aeroflex, Peregrine, Syfer, Eurofarad, Texas Instrument, Miteq, Cobham, E2V, MA-COM, Hittite, Mini-Circuits,General Dynamics и др.);

Помимо этого, одним из направлений компании «ЭлектроПласт» является направление «Источники питания». Мы предлагаем Вам помощь Конструкторского отдела:

- Подбор оптимального решения, техническое обоснование при выборе компонента;
- Подбор аналогов;
- Консультации по применению компонента;
- Поставка образцов и прототипов;
- Техническая поддержка проекта;
- Защита от снятия компонента с производства.

Как с нами связаться

Телефон: 8 (812) 309 58 32 (многоканальный)
Факс: 8 (812) 320-02-42
Электронная почта: org@eplast1.ru
Адрес: 198099, г. Санкт-Петербург, ул. Калинина, дом 2, корпус 4, литера А.