AC and Pulse Metallized Polypropylene Film Capacitors
MKP Radial Potted Type

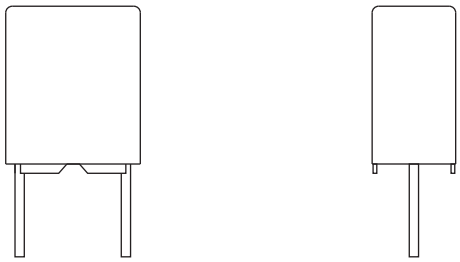

FEATURES

- 5 mm pitch
- Material categorization:
  for definitions of compliance please see www.vishay.com/doc?99912

Pb-free
RoHS COMPLIANT
HALOGEN FREE
GREEN (5-2008)

APPLICATIONS

Low losses due to low contact resistance and low loss dielectric make these products suitable for applications where high currents at high frequency occur or high stability is preferred.

QUICK REFERENCE DATA	
Capacitance range (E24 series)	0.0022 µF to 0.1 µF
Capacitance tolerance	± 10 %, ± 5 %
Climatic category	55/085/56
Maximum application temperature	85 °C
Reference specifications	IEC 60384-17
Dielectric	Polypropylene film
Electrodes	Metallized film
Construction	Wound mono construction
Encapsulation	Flame retardant plastic case and epoxy resin UL-class 94 V-0
Leads	Tinned wire
Marking	C-value; tolerance; rated voltage; manufacturer's type designation; code for dielectric material; manufacturer's emblem; code for factory of origin; year and week of manufacture
Rated DC voltage	100 V_{DC}; 160 V_{DC}; 250 V_{DC}; 400 V_{DC}; 630 V_{DC}
Rated AC voltage	63 V_{AC}; 100 V_{AC}; 160 V_{AC}; 200 V_{AC}
Rated peak-to-peak voltage	180 V; 280 V; 450 V; 560 V
Rated temperature	85 °C
Performance grade	Grade 1 (long life)
Stability grade	Grade 2

Note

- For more detailed data and test requirements contact: dc-film@vishay.com

For technical questions, contact: dc-film@vishay.com
THIS DOCUMENT IS SUBJECT TO CHANGE WITHOUT NOTICE. THE PRODUCTS DESCRIBED HEREIN AND THIS DOCUMENT ARE SUBJECT TO SPECIFIC DISCLAIMERS, SET FORTH AT www.vishay.com/doc?91000

DIMENSIONS in millimeters

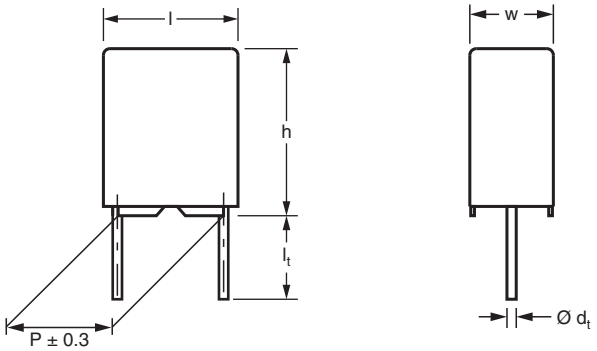

COMPOSITION OF CATALOG NUMBER

TYPE AND PITCHES	
380	5.0 mm

CAPACITANCE (numerically)

MULTIPLIER (nF)	
0.1	2
1	3
10	4

Example:
104 = 10 x 10 = 100 nF

2222*	380	XX	XX	X
BFC2	380	XX	XX	X

* Old ordering code

TYPE	PACKAGING	LEAD CONFIGURATION	PREFERRED TYPES					
			C-TOL.	100 V	160 V	250 V	400 V	630 V
380	Ammopack	H = 18.5 mm; P_0 = 12.7 mm	± 10 %	25	35	45	55	65
TYPE	**PACKAGING**	**LEAD CONFIGURATION**	**ON REQUEST**					
380	Ammopack	H = 18.5 mm; P_0 = 12.7 mm	± 5 %	26	36	46	56	66
	Loose in box	Lead length 4.0 mm + 1.0 mm / - 0.5 mm	± 10 %	21	31	41	51	61
			± 5 %	22	32	42	52	62

For technical questions, contact: dc-film@vishay.com
THIS DOCUMENT IS SUBJECT TO CHANGE WITHOUT NOTICE. THE PRODUCTS DESCRIBED HEREIN AND THIS DOCUMENT ARE SUBJECT TO SPECIFIC DISCLAIMERS, SET FORTH AT www.vishay.com/doc?91000

SPECIFIC REFERENCE DATA - 100 V_{DC}		
DESCRIPTION	VALUE	
Tangent of loss angle:	at 10 kHz	at 100 kHz
0.018 µF ≤ C ≤ 0.027 µF	≤ 10 x 10^{-4}	≤ 15 x 10^{-4}
0.027 µF < C ≤ 0.075 µF	≤ 10 x 10^{-4}	≤ 20 x 10^{-4}
0.075 µF < C ≤ 0.1 µF	≤ 10 x 10^{-4}	≤ 25 x 10^{-4}
Rated voltage pulse slope $(dU/dt)_R$ at 100 V (DC)	80 V/µs	
R between leads for C ≤ 1.0 µF at 100 V; 1 min	> 100 000 MΩ	
R between interconnected leads and case; 100 V; 1 min	> 100 000 MΩ	
Withstanding (DC) voltage (cut off current 10 mA) [1]; rise time 1000 V/s	160 V; 1 min	
Withstanding (DC) voltage between leads and case	2840 V; 1 min	

Note

[1] See "Voltage Proof Test for Metalized Film Capacitors": www.vishay.com/doc?28169

ELECTRICAL DATA AND ORDERING CODE						
U_{RDC} (V)	CAP. (µF)	DIMENSIONS w x h x l (mm)	MASS [2] (g)	CATALOG NUMBER BFC2 380 ..... AND PACKAGING		
				AMMOPACK [1]		LOOSE IN BOX
				H = 18.5 mm, P_0 = 12.7 mm		l_t = 4.0 mm + 1.0 mm / - 0.5 mm
				C-TOL. = ± 10 %	SPQ	SPQ
				LAST 5 DIGITS OF CATALOG NUMBER		
100	PITCH = 5.0 mm ± 0.3 mm; d_t = 0.50 mm ± 0.05 mm; U_{RAC} = 63 V; U_{p-p} = 180 V					
	0.018	3.5 x 8.0 x 7.2	0.30	25183	1500	2000
	0.020			25203		
	0.022			25223		
	0.024			25243		
	0.027			25273		
	0.030			25303		
	0.033			25333		
	0.036			25363	1000	
	0.039			25393		
	0.043			25433		
	0.047			25473		
	0.051	4.5 x 9.0 x 7.2	0.42	25513	750	
	0.056			25563		
	0.062			25623		
	0.068			25683		
	0.075	6.0 x 11.0 x 7.2	0.64	25753		
	0.082			25823		
	0.091			25913		
	0.100			25104		

Notes

[1] H = in-tape height; P_0 = sprocket hole distance; for detailed specifications refer to packaging information

[2] Weight for short lead product only

- SPQ = Standard Packing Quantity

For technical questions, contact: dc-film@vishay.com

THIS DOCUMENT IS SUBJECT TO CHANGE WITHOUT NOTICE. THE PRODUCTS DESCRIBED HEREIN AND THIS DOCUMENT ARE SUBJECT TO SPECIFIC DISCLAIMERS, SET FORTH AT www.vishay.com/doc?91000

SPECIFIC REFERENCE DATA - 160 V_{DC}		
DESCRIPTION	**VALUE**	
Tangent of loss angle:	at 10 kHz	at 100 kHz
0.013 µF ≤ C ≤ 0.027 µF	≤ 10 x 10^{-4}	≤ 15 x 10^{-4}
0.027 µF < C ≤ 0.068 µF	≤ 10 x 10^{-4}	≤ 20 x 10^{-4}
Rated voltage pulse slope $(dU/dt)_R$ at 160 V (DC)	80 V/µs	
R between leads for C ≤ 1.0 µF at 100 V; 1 min	> 100 000 MΩ	
R between interconnected leads and case; 100 V; 1 min	> 100 000 MΩ	
Withstanding (DC) voltage (cut off current 10 mA) [1]; rise time 1000 V/s	256 V; 1 min	
Withstanding (DC) voltage between leads and case	2840 V; 1 min	

Note

[1] See "Voltage Proof Test for Metalized Film Capacitors": www.vishay.com/doc?28169

ELECTRICAL DATA AND ORDERING CODE						
U_{RDC} (V)	CAP. (µF)	DIMENSIONS w x h x l (mm)	MASS [2] (g)	CATALOG NUMBER BFC2 380 ..... AND PACKAGING		
				AMMOPACK [1]		LOOSE IN BOX
				H = 18.5 mm, P_0 = 12.7 mm		l_t = 4.0 mm + 1.0 mm / - 0.5 mm
				C-TOL. = ± 10 %		
				LAST 5 DIGITS OF CATALOG NUMBER	SPQ	SPQ
	PITCH = 5.0 mm ± 0.3 mm; d_t = 0.50 mm ± 0.05 mm; U_{RAC} = 100 V; U_{p-p} = 280 V					
160	0.013	3.5 x 8.0 x 7.2	0.30	35133	1500	2000
	0.015			35153		
	0.016			35163		
	0.018			35183		
	0.020			35203		
	0.022			35223		
	0.024			35243	1000	
	0.027			35273		
	0.030			35303		
	0.033			35333		
	0.036			35363	750	
	0.039			35393		
	0.043			35433		
	0.047			35473		
	0.051	4.5 x 9.0 x 7.2	0.42	35513	750	2000
	0.056			35563		
	0.062			35623		
	0.068			35683		

Notes

[1] H = in-tape height; P_0 = sprocket hole distance; for detailed specifications refer to packaging information

[2] Weight for short lead product only

- SPQ = Standard Packing Quantity

For technical questions, contact: dc-film@vishay.com

THIS DOCUMENT IS SUBJECT TO CHANGE WITHOUT NOTICE. THE PRODUCTS DESCRIBED HEREIN AND THIS DOCUMENT ARE SUBJECT TO SPECIFIC DISCLAIMERS, SET FORTH AT www.vishay.com/doc?91000

SPECIFIC REFERENCE DATA - 250 V_{DC}		
DESCRIPTION	**VALUE**	
Tangent of loss angle:	at 10 kHz	at 100 kHz
0.0091 µF ≤ C ≤ 0.027 µF	≤ 10 x 10^{-4}	≤ 15 x 10^{-4}
0.027 µF < C ≤ 0.043 µF	≤ 10 x 10^{-4}	≤ 20 x 10^{-4}
Rated voltage pulse slope $(dU/dt)_R$ at 250 V (DC)	90 V/µs	
R between leads for C ≤ 1.0 µF at 100 V; 1 min	> 100 000 MΩ	
R between interconnected leads and case; 100 V; 1 min	> 100 000 MΩ	
Withstanding (DC) voltage (cut off current 10 mA) [1]; rise time 100 V/s	400 V; 1 min	
Withstanding (DC) voltage between leads and case	2840 V; 1 min	

Note

[1] See "Voltage Proof Test for Metalized Film Capacitors": www.vishay.com/doc?28169

ELECTRICAL DATA AND ORDERING CODE						
U_{RDC} (V)	CAP. (µF)	DIMENSIONS w x h x l (mm)	MASS [2] (g)	CATALOG NUMBER BFC2 380 ..... AND PACKAGING		
				AMMOPACK [1]		LOOSE IN BOX
				H = 18.5 mm, P_0 = 12.7 mm		l_t = 4.0 mm + 1.0 mm / - 0.5 mm
				C-TOL. = ± 10 %	SPQ	SPQ
				LAST 5 DIGITS OF CATALOG NUMBER		
250	PITCH = 5.0 mm ± 0.3 mm; d_t = 0.50 mm ± 0.05 mm; U_{RAC} = 160 V; U_{p-p} = 450 V					
	0.0091	3.5 x 8.0 x 7.2	0.30	45912	1500	2000
	0.010			45103		
	0.011			45113		
	0.012			45123		
	0.013			45133		
	0.015			45153		
	0.016			45163	1000	2000
	0.018			45183		
	0.020			45203		
	0.022			45223		
	0.024			45243		
	0.027			45273	750	2000
	0.030			45303		
	0.033			45333		
	0.036			45363		
	0.039			45393		
	0.043	4.5 x 9.0 x 7.2	0.42	45433	750	2000

Notes

[1] H = in-tape height; P_0 = sprocket hole distance; for detailed specifications refer to packaging information

[2] Weight for short lead product only

- SPQ = Standard Packing Quantity

For technical questions, contact: dc-film@vishay.com

THIS DOCUMENT IS SUBJECT TO CHANGE WITHOUT NOTICE. THE PRODUCTS DESCRIBED HEREIN AND THIS DOCUMENT ARE SUBJECT TO SPECIFIC DISCLAIMERS, SET FORTH AT www.vishay.com/doc?91000

SPECIFIC REFERENCE DATA - 400 V_{DC}		
DESCRIPTION	VALUE	
Tangent of loss angle:	at 10 kHz	at 100 kHz
0.0043 µF ≤ C ≤ 0.0091 µF	≤ 10 x 10^{-4}	≤ 15 x 10^{-4}
0.0091 µF < C ≤ 0.02 µF	≤ 10 x 10^{-4}	≤ 20 x 10^{-4}
Rated voltage pulse slope $(dU/dt)_R$ at 400 V (DC)	100 V/µs	
R between leads for C ≤ 1.0 µF at 100 V; 1 min	> 100 000 MΩ	
R between interconnected leads and case; 100 V; 1 min	> 100 000 MΩ	
Withstanding (DC) voltage (cut off current 10 mA) [1]; rise time 100 V/s	640 V; 1 min	
Withstanding (DC) voltage between leads and case	2840 V; 1 min	

Note

[1] See "Voltage Proof Test for Metalized Film Capacitors": www.vishay.com/doc?28169

ELECTRICAL DATA AND ORDERING CODE						
U_{RDC} (V)	CAP. (µF)	DIMENSIONS w x h x l (mm)	MASS [2] (g)	CATALOG NUMBER BFC2 380 ..... AND PACKAGING		
				AMMOPACK [1]		LOOSE IN BOX
				H = 18.5 mm, P_0 = 12.7 mm		l_t = 4.0 mm + 1.0 mm / - 0.5 mm
				C-TOL. = ± 10 %	SPQ	SPQ
				LAST 5 DIGITS OF CATALOG NUMBER		
400	PITCH = 5.0 mm ± 0.3 mm; d_t = 0.50 mm ± 0.05 mm; U_{RAC} = 200 V; U_{p-p} = 560 V					
	0.0043	3.5 x 8.0 x 7.2	0.30	55432	1500	2000
	0.0047			55472		
	0.0051			55512		
	0.0056			55562		
	0.0062			55622		
	0.0068			55682		
	0.0075			55752		
	0.0082			55822		
	0.0091			55912	1000	
	0.010			55103		
	0.011			55113		
	0.012			55123		
	0.013	4.5 x 9.0 x 7.2	0.42	55133	750	
	0.015			55153		
	0.016			55163		
	0.018			55183		
	0.020	6.0 x 11.0 x 7.2	0.64	55203		

Notes

[1] H = in-tape height; P_0 = sprocket hole distance; for detailed specifications refer to packaging information

[2] Weight for short lead product only

- SPQ = Standard Packing Quantity

For technical questions, contact: dc-film@vishay.com

THIS DOCUMENT IS SUBJECT TO CHANGE WITHOUT NOTICE. THE PRODUCTS DESCRIBED HEREIN AND THIS DOCUMENT ARE SUBJECT TO SPECIFIC DISCLAIMERS, SET FORTH AT www.vishay.com/doc?91000

SPECIFIC REFERENCE DATA - 630 V_{DC}		
DESCRIPTION	VALUE	
Tangent of loss angle:	at 10 kHz	at 100 kHz
0.0015 µF ≤ C ≤ 0.0091 µF	≤ 10 x 10^{-4}	≤ 15 x 10^{-4}
0.0091 µF < C ≤ 0.01 µF	≤ 10 x 10^{-4}	≤ 15 x 10^{-4}
Rated voltage pulse slope $(dU/dt)_R$ at 630 V (DC)	120 V/µs	
R between leads for C ≤ 1.0 µF at 500 V; 1 min	> 100 000 MΩ	
R between interconnected leads and case; 500 V; 1 min	> 100 000 MΩ	
Withstanding (DC) voltage (cut off current 10 mA) [1]; rise time 1000 V/s	880 V; 1 min	
Withstanding (DC) voltage between leads and case	2840 V; 1 min	

Note

[1] See "Voltage Proof Test for Metalized Film Capacitors": www.vishay.com/doc?28169

ELECTRICAL DATA AND ORDERING CODE

U_{RDC} (V)	CAP. (µF)	DIMENSIONS w x h x l (mm)	MASS [2] (g)	CATALOG NUMBER BFC2 380 ..... AND PACKAGING		
				AMMOPACK [1]		LOOSE IN BOX
				H = 18.5 mm, P_0 = 12.7 mm		l_t = 4.0 mm + 1.0 mm / - 0.5 mm
				C-TOL. = ± 10 %		
				LAST 5 DIGITS OF CATALOG NUMBER	SPQ	SPQ
630	PITCH = 5.0 ± 0.3 mm; d_t = 0.50 ± 0.05 mm; U_{RAC} = 200 V; U_{p-p} = 560 V					
	0.0022	3.5 x 8.0 x 7.2	0.30	65222	1500	2000
	0.0024			65242		
	0.0027			65272		
	0.0030			65302		
	0.0033			65332		
	0.0036			65362		
	0.0039			65392		
	0.0043			65432	1000	
	0.0047			65472		
	0.0051			65512		
	0.0056			65562		
	0.0062			65622	750	
	0.0068			65682		
	0.0075	4.5 x 9.0 x 7.2	0.42	65752		
	0.0082			65822		
	0.0091			65912		
	0.010			65103		

Notes

[1] H = in-tape height; P_0 = sprocket hole distance; for detailed specifications refer to packaging information

[2] Weight for short lead product only

- SPQ = Standard Packing Quantity

For technical questions, contact: dc-film@vishay.com

THIS DOCUMENT IS SUBJECT TO CHANGE WITHOUT NOTICE. THE PRODUCTS DESCRIBED HEREIN AND THIS DOCUMENT ARE SUBJECT TO SPECIFIC DISCLAIMERS, SET FORTH AT www.vishay.com/doc?91000

Disclaimer

ALL PRODUCT, PRODUCT SPECIFICATIONS AND DATA ARE SUBJECT TO CHANGE WITHOUT NOTICE TO IMPROVE RELIABILITY, FUNCTION OR DESIGN OR OTHERWISE.

Vishay Intertechnology, Inc., its affiliates, agents, and employees, and all persons acting on its or their behalf (collectively, "Vishay"), disclaim any and all liability for any errors, inaccuracies or incompleteness contained in any datasheet or in any other disclosure relating to any product.

Vishay makes no warranty, representation or guarantee regarding the suitability of the products for any particular purpose or the continuing production of any product. To the maximum extent permitted by applicable law, Vishay disclaims (i) any and all liability arising out of the application or use of any product, (ii) any and all liability, including without limitation special, consequential or incidental damages, and (iii) any and all implied warranties, including warranties of fitness for particular purpose, non-infringement and merchantability.

Statements regarding the suitability of products for certain types of applications are based on Vishay's knowledge of typical requirements that are often placed on Vishay products in generic applications. Such statements are not binding statements about the suitability of products for a particular application. It is the customer's responsibility to validate that a particular product with the properties described in the product specification is suitable for use in a particular application. Parameters provided in datasheets and/or specifications may vary in different applications and performance may vary over time. All operating parameters, including typical parameters, must be validated for each customer application by the customer's technical experts. Product specifications do not expand or otherwise modify Vishay's terms and conditions of purchase, including but not limited to the warranty expressed therein.

Except as expressly indicated in writing, Vishay products are not designed for use in medical, life-saving, or life-sustaining applications or for any other application in which the failure of the Vishay product could result in personal injury or death. Customers using or selling Vishay products not expressly indicated for use in such applications do so at their own risk. Please contact authorized Vishay personnel to obtain written terms and conditions regarding products designed for such applications.

No license, express or implied, by estoppel or otherwise, to any intellectual property rights is granted by this document or by any conduct of Vishay. Product names and markings noted herein may be trademarks of their respective owners.

Material Category Policy

Vishay Intertechnology, Inc. hereby certifies that all its products that are identified as RoHS-Compliant fulfill the definitions and restrictions defined under Directive 2011/65/EU of The European Parliament and of the Council of June 8, 2011 on the restriction of the use of certain hazardous substances in electrical and electronic equipment (EEE) - recast, unless otherwise specified as non-compliant.

Please note that some Vishay documentation may still make reference to RoHS Directive 2002/95/EC. We confirm that all the products identified as being compliant to Directive 2002/95/EC conform to Directive 2011/65/EU.

Vishay Intertechnology, Inc. hereby certifies that all its products that are identified as Halogen-Free follow Halogen-Free requirements as per JEDEC JS709A standards. Please note that some Vishay documentation may still make reference to the IEC 61249-2-21 definition. We confirm that all the products identified as being compliant to IEC 61249-2-21 conform to JEDEC JS709A standards.

Компания «ЭлектроПласт» предлагает заключение долгосрочных отношений при поставках импортных электронных компонентов на взаимовыгодных условиях!

Наши преимущества:

- Оперативные поставки широкого спектра электронных компонентов отечественного и импортного производства напрямую от производителей и с крупнейших мировых складов;
- Поставка более 17-ти миллионов наименований электронных компонентов;
- Поставка сложных, дефицитных, либо снятых с производства позиций;
- Оперативные сроки поставки под заказ (от 5 рабочих дней);
- Экспресс доставка в любую точку России;
- Техническая поддержка проекта, помощь в подборе аналогов, поставка прототипов;
- Система менеджмента качества сертифицирована по Международному стандарту ISO 9001;
- Лицензия ФСБ на осуществление работ с использованием сведений, составляющих государственную тайну;
- Поставка специализированных компонентов (Xilinx, Altera, Analog Devices, Intersil, Interpoint, Microsemi, Aeroflex, Peregrine, Syfer, Eurofarad, Texas Instrument, Miteq, Cobham, E2V, MA-COM, Hittite, Mini-Circuits,General Dynamics и др.);

Помимо этого, одним из направлений компании «ЭлектроПласт» является направление «Источники питания». Мы предлагаем Вам помощь Конструкторского отдела:

- Подбор оптимального решения, техническое обоснование при выборе компонента;
- Подбор аналогов;
- Консультации по применению компонента;
- Поставка образцов и прототипов;
- Техническая поддержка проекта;
- Защита от снятия компонента с производства.

Как с нами связаться

Телефон: 8 (812) 309 58 32 (многоканальный)
Факс: 8 (812) 320-02-42
Электронная почта: org@eplast1.ru
Адрес: 198099, г. Санкт-Петербург, ул. Калинина, дом 2, корпус 4, литера А.