75705-****

MODULE TYPE -- TAIL PLATING TYPE
UNGUIDED -- TIN ONLY = 0 (PREVIOUSLY TIN/LEAD)
UNGUIDED -- TIN ONLY = 1

# OF COLUMNS
5 = 5 COL
6 = 6 COL
8 = 8 COL
1 = 10 COL

END WALL OPTIONS
0 = OPEN ENDS
1 = LEFT END WALL
2 = DUAL END WALL
3 = RIGHT END WALL

PIN LENGTH (P)
2 = 3.90 - 30 GOLD
3 = 4.70 - 30 GOLD
4 = 5.70 - 30 GOLD
5 = 4.70 & 5.70 -30 GOLD STAGGERED
6 = 3.90 - 10 GOLD
7 = 4.70 - 10 GOLD
8 = 5.70 - 10 GOLD
9 = 4.70 & 5.70 - 10 GOLD STAGGERED

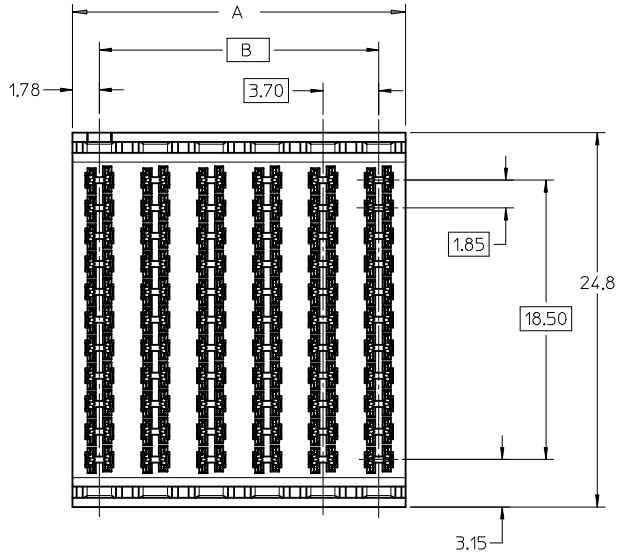


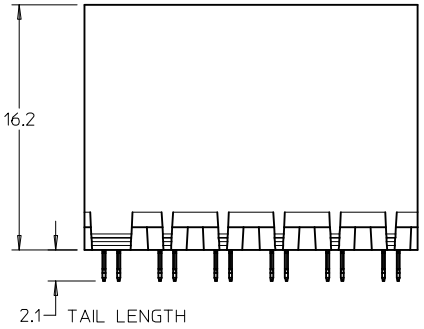


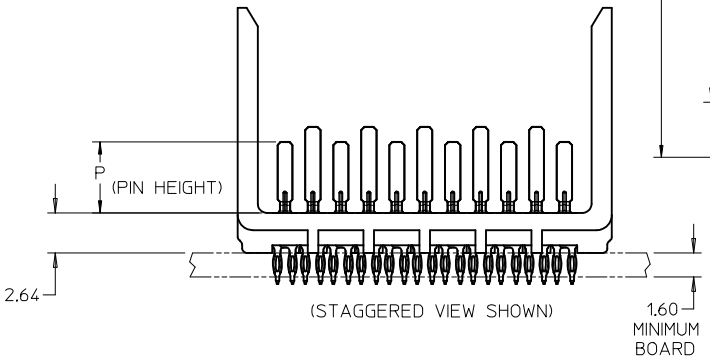


(STAGGERED VIEW SHOWN)

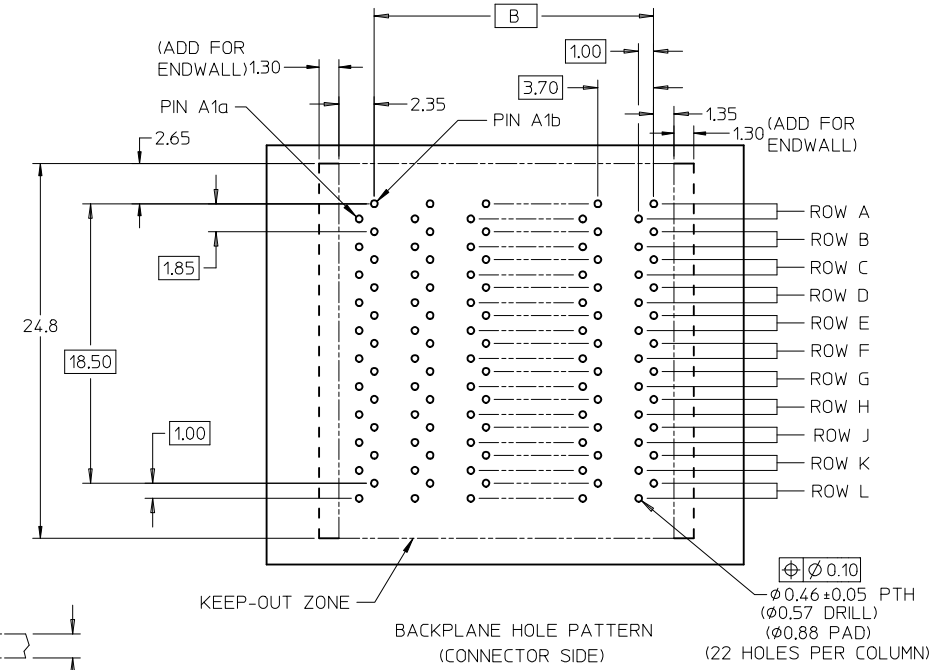


BACKPLANE HOLE PATTERN
(CONNECTOR SIDE)

NOTES:
1. MATERIALS: HOUSING - LIQUID CRYSTAL POLYMER (LCP)
GLASS-FILLED, UL94V-0
TERMINALS - HIGH PERFORMANCE COPPER ALLOY
2. FINISH: 10 MICROINCH MINIMUM GOLD OR 30 MICROINCH MINIMUM GOLD IN CONTACT AREA. SELECTIVE MATTE TIN ON PCB TAILS, NICKEL OVERALL.
3. REFER TO MOLEX PRODUCT SPECIFICATION PS-75710-999 FOR PERFORMANCE SPECIFICATIONS.
4. FOR MIXED CONTACT MATING LENGTHS, CONSULT MOLEX FOR AVAILABLITY.
5. THIS PART CONFORMS TO CLASS B REQUIREMENTS OF MOLEX COSMETIC SPEC PS-45499-002.
6. PACKAGE PER: PK-70873-587.
7. REFER TO PCB ROUTING GUIDE FOR ANTIPAD AND ROUTING RECOMMENDATIONS.

LEADFREE CONVERS.
EC NO: UCP2013-1898
DRWN:MPOFF 2012/11/12
CH'KD:MWOLFE 2012/11/12
APPR:SMILLER 2012/12/21
E
REV DESCRIPTION

QUALITY SYMBOLS
$F_A$ =0
$F_C$ =0
$F_B$ =0

GENERAL TOLERANCES (UNLESS SPECIFIED)

| | mm | INCH |
|---|---|---|
| 4 PLACES | ± --- | ± --- |
| 3 PLACES | ± --- | ± --- |
| 2 PLACES | ± 0.13 | ± --- |
| 1 PLACE | ± 0.25 | ± --- |
| 0 PLACE | ± | ± |

ANGULAR ±1/2°
DRAFT WHERE APPLICABLE MUST REMAIN WITHIN DIMENSIONS

DIMENSION STYLE: MM ONLY
SCALE: 4:1
DESIGN UNITS: METRIC
THIRD ANGLE PROJECTION

| | | |
|---|---|---|
| DRAWN BY | JLAURX | DATE 1/28/05 |
| CHECKED BY | BPISZCZOR | DATE 6/02/06 |
| APPROVED BY | CBIXLER | DATE 6/02/06 |
| MATERIAL NO. | SEE TABLE | |

TITLE: I-TRAC BACKPLANE HEADER UNGUIDED ASSEMBLY SALES DRAWING

molex

DOCUMENT NO. SD-75705-001
SHEET NO. 1 OF 4
SIZE C

THIS DRAWING CONTAINS INFORMATION THAT IS PROPRIETARY TO MOLEX INCORPORATED AND SHOULD NOT BE USED WITHOUT WRITTEN PERMISSION

tb_frame_C_P_AM_T
Rev. G 2012/01/11

| MATERIAL NUMBER | # OF COLUMNS | DIM "A" | DIM "B" |
|---|---|---|---|
| 75705-*52* | 5 | 21.0 | 14.80 |
| 75705-*62* | 6 | 24.7 | 18.50 |
| 75705-*82* | 8 | 32.1 | 25.90 |
| 75705-*12* | 10 | 39.5 | 33.30 |

DUAL END WALL STYLE

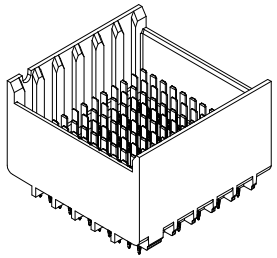

| MATERIAL NUMBER | # OF COLUMNS | DIM "A" | DIM "B" |
|---|---|---|---|
| 75705-*51* | 5 | 19.7 | 14.80 |
| 75705-*61* | 6 | 23.4 | 18.50 |
| 75705-*81* | 8 | 30.8 | 25.90 |
| 75705-*11* | 10 | 38.2 | 33.30 |

LEFT END WALL STYLE

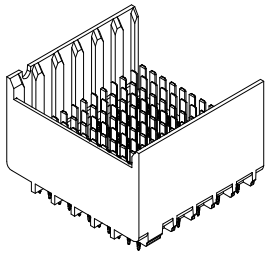

| MATERIAL NUMBER | # OF COLUMNS | DIM "A" | DIM "B" |
|---|---|---|---|
| 75705-*53* | 5 | 19.7 | 14.80 |
| 75705-*63* | 6 | 23.4 | 18.50 |
| 75705-*83* | 8 | 30.8 | 25.90 |
| 75705-*13* | 10 | 38.2 | 33.30 |

RIGHT END WALL STYLE

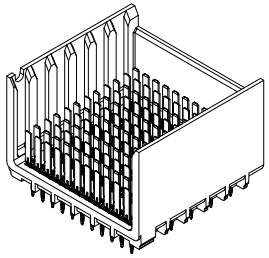

| MATERIAL NUMBER | # OF COLUMNS | DIM "A" | DIM "B" |
|---|---|---|---|
| 75705-*50* | 5 | 18.35 | 14.80 |
| 75705-*60* | 6 | 22.05 | 18.50 |
| 75705-*80* | 8 | 29.45 | 25.90 |
| 75705-*10* | 10 | 36.85 | 33.30 |

OPEN STYLE

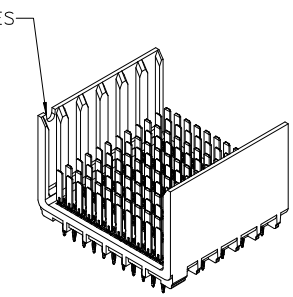


SEE SHEET 1
EC NO: UCP2013-1898
DRWN:MPOFF 2012/11/12
CH'KD:MWOLFE 2012/11/12
APPR:SMILLER 2012/12/21
E
REV
DESCRIPTION

QUALITY SYMBOLS
$F_A$ =0
$F_C$ =0
$F_P$ =0

GENERAL TOLERANCES (UNLESS SPECIFIED)

| | mm | INCH |
|---|---|---|
| 4 PLACES | ± --- | ± --- |
| 3 PLACES | ± --- | ± --- |
| 2 PLACES | ± 0.13 | ± --- |
| 1 PLACE | ± 0.25 | ± --- |
| 0 PLACE | ± | ± |

ANGULAR ±1/2°

DRAFT WHERE APPLICABLE MUST REMAIN WITHIN DIMENSIONS

DIMENSION STYLE: MM ONLY
SCALE: 4:1
DESIGN UNITS: METRIC
THIRD ANGLE PROJECTION

DRAWN BY: JLAURX DATE: 1/28/05
CHECKED BY: BPISZCZOR DATE: 6/02/06
APPROVED BY: CBIXLER DATE: 6/02/06
MATERIAL NO.: SEE TABLE
SIZE: C

TITLE: I-TRAC BACKPLANE HEADER UNGUIDED ASSEMBLY SALES DRAWING

molex

DOCUMENT NO.: SD-75705-001
SHEET NO.: 2 OF 4

THIS DRAWING CONTAINS INFORMATION THAT IS PROPRIETARY TO MOLEX INCORPORATED AND SHOULD NOT BE USED WITHOUT WRITTEN PERMISSION

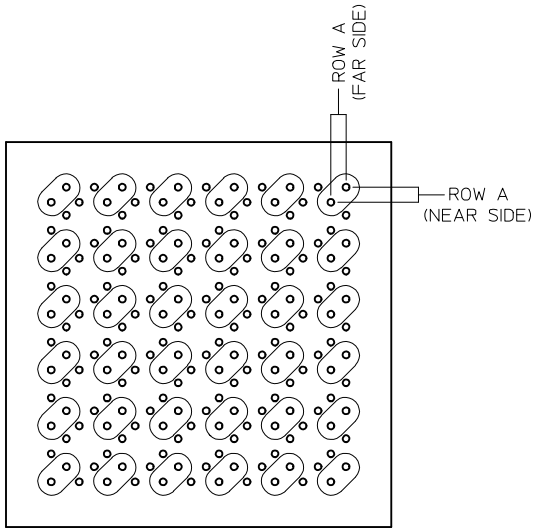


ORTHOGONAL MIDPLANE HOLE PATTERN
(36 SIGNAL PAIRS SHARE VIAS)

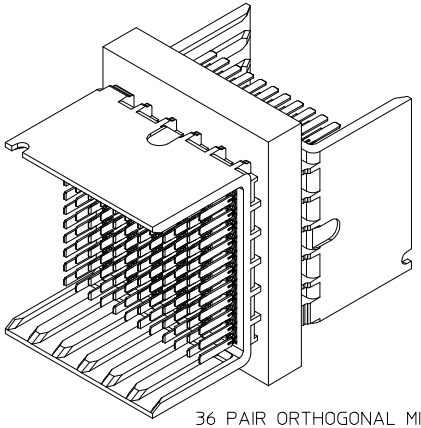

36 PAIR ORTHOGONAL MIDPLANE NODE
(USES TWO 6 COLUMN I-TRAC HEADERS)

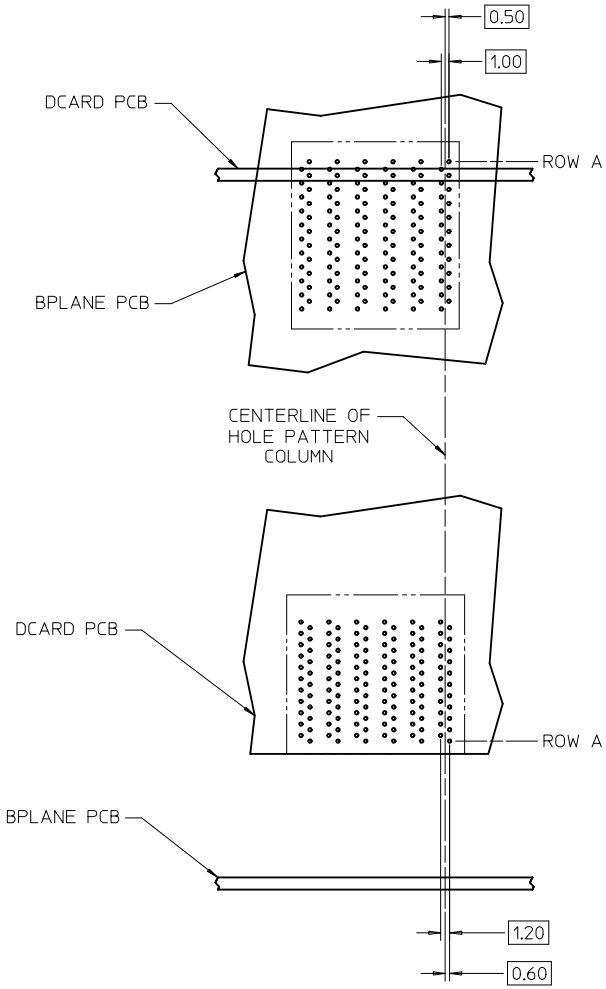


## I-TRAC 11 ROW BOARD RELATIONSHIPS

SCALE 2:1

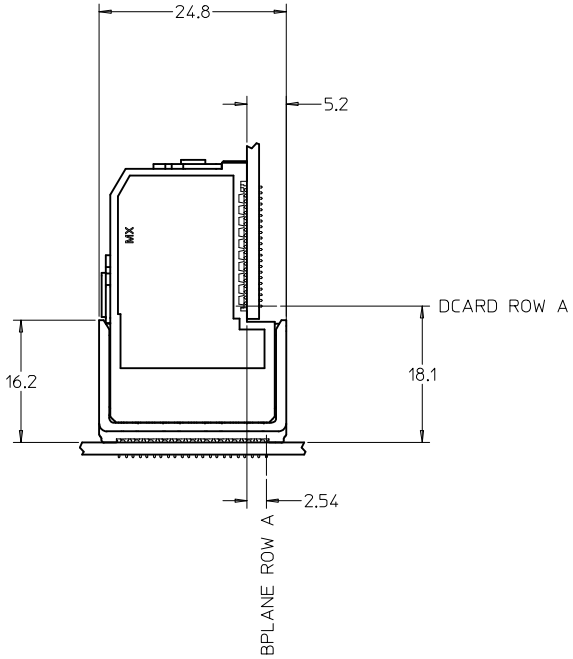


| | | | | | | | |
|---|---|---|---|---|---|---|---|
| SEE SHEET 1 | QUALITY SYMBOLS | GENERAL TOLERANCES (UNLESS SPECIFIED) | DIMENSION STYLE: MM ONLY | SCALE: 4:1 | DESIGN UNITS: METRIC | THIRD ANGLE PROJECTION | |
| EC NO: UCP2013-1898 2012/11/12 | | mm / INCH | DRAWN BY: JLAURX DATE: 1/28/05 | TITLE: I-TRAC BACKPLANE HEADER UNGUIDED ASSEMBLY SALES DRAWING | | | |
| DRWN:MPOFF 2012/11/12 | | 4 PLACES ± --- / ± --- | CHECKED BY: BPISZCZOR DATE: 6/02/06 | | | | |
| CHKD:MWOLFE 2012/11/12 | | 3 PLACES ± --- / ± --- | APPROVED BY: CBIXLER DATE: 6/02/06 | molex | | | |
| APPR:SMILLER 2012/12/21 | | 2 PLACES ± 0.13 / ± --- | MATERIAL NO.: SEE TABLE | DOCUMENT NO.: SD-75705-001 | SHEET NO.: 3 OF 4 | | |
| DESCRIPTION | | 1 PLACE ± 0.25 / ± --- | SIZE: C | THIS DRAWING CONTAINS INFORMATION THAT IS PROPRIETARY TO MOLEX INCORPORATED AND SHOULD NOT BE USED WITHOUT WRITTEN PERMISSION | | | |
| REV | | 0 PLACE ± / ± | | | | | |
| | | ANGULAR ±1/2° | | | | | |
| | | DRAFT WHERE APPLICABLE MUST REMAIN WITHIN DIMENSIONS | | | | | |

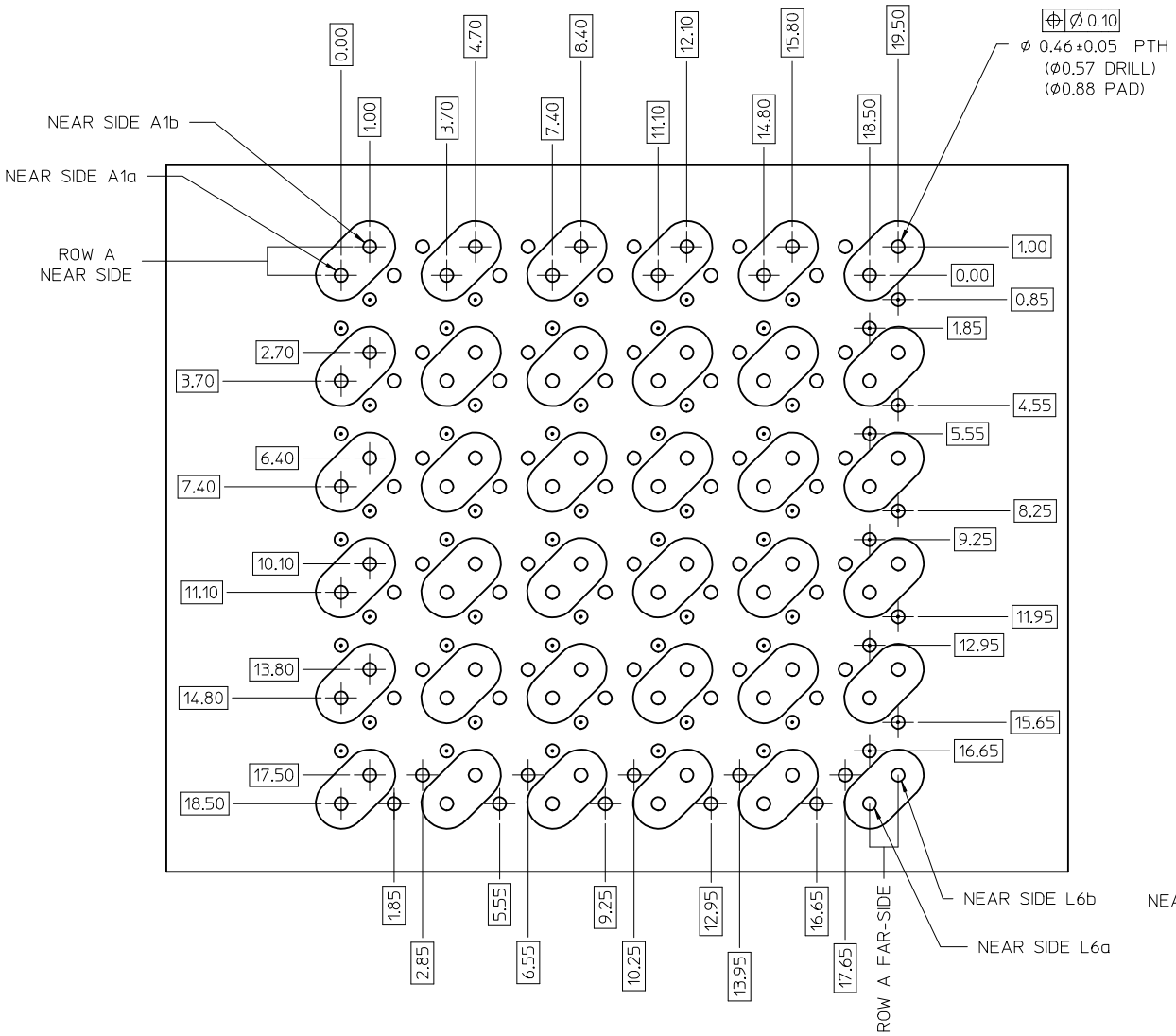


Orthogonal PCB Layout

| ORTHO PIN MAPPING | | | | | |
|---|---|---|---|---|---|
| OPTION 90 (NEAR SIDE - FAR SIDE) | | | | | |
| A1b-L6b | A2b-J6b | A3b-G6b | A4b-E6b | A5b-C6b | A6b-A6b |
| A1a-L6a | A2a-J6a | A3a-G6a | A4a-E6a | A5a-C6a | A6a-A6a |
| C1b-L5b | C2b-J5b | C3b-G5b | C4b-E5b | C5b-C5b | C6b-A5b |
| C1a-L5a | C2a-J5a | C3a-G5a | C4a-E5a | C5a-C5a | C6a-A5a |
| E1b-L4b | E2b-J4b | E3b-G4b | E4b-E4b | E5b-C4b | E6b-A4b |
| E1a-L4a | E2a-J4a | E3a-G4a | E4a-E4a | E5a-C4a | E6a-A4a |
| G1b-L3b | G2b-J3b | G3b-G3b | G4b-E3b | G5b-C3b | G6b-A3b |
| G1a-L3a | G2a-J3a | G3a-G3a | G4a-E3a | G5a-C3a | G6a-A3a |
| J1b-L2b | J2b-J2b | J3b-G2b | J4b-E2b | J5b-C2b | J6b-A2b |
| J1a-L2a | J2a-J2a | J3a-G2a | J4a-E2a | J5a-C2a | J6a-A2a |
| L1b-L1b | L2b-J1b | L3b-G1b | L4b-E1b | L5b-C1b | L6b-A1b |
| L1a-L1a | L2a-J1a | L3a-G1a | L4a-E1a | L5a-C1a | L6a-A1a |

| ORTHO PIN MAPPING | | | | | |
|---|---|---|---|---|---|
| OPTION 270 (NEAR SIDE - FAR SIDE) | | | | | |
| A1b-A1a | A2b-C1a | A3b-E1a | A4b-G1a | A5b-J1a | A6b-L1a |
| A1a-A1b | A2a-C1b | A3a-E1b | A4a-G1b | A5a-J1b | A6a-L1b |
| C1b-A2a | C2b-C2a | C3b-E2a | C4b-G2a | C5b-J2a | C6b-L2a |
| C1a-A2b | C2a-C2b | C3a-E2b | C4a-G2b | C5a-J2b | C6a-L2b |
| E1b-A3a | E2b-C3a | E3b-E3a | E4b-G3a | E5b-J3a | E6b-L3a |
| E1a-A3b | E2a-C3b | E3a-E3b | E4a-G3b | E5a-J3b | E6a-L3b |
| G1b-A4a | G2b-C4a | G3b-E4a | G4b-G4a | G5b-J4a | G6b-L4a |
| G1a-A4b | G2a-C4b | G3a-E4b | G4a-G4b | G5a-J4b | G6a-L4b |
| J1b-A5a | J2b-C5a | J3b-E5a | J4b-G5a | J5b-J5a | J6b-L5a |
| J1a-A5b | J2a-C5b | J3a-E5b | J4a-G5b | J5a-J5b | J6a-L5b |
| L1b-A6a | L2b-C6a | L3b-E6a | L4b-G6a | L5b-J6a | L6b-L6a |
| L1a-A6b | L2a-C6b | L3a-E6b | L4a-G6b | L5a-J6b | L6a-L6b |

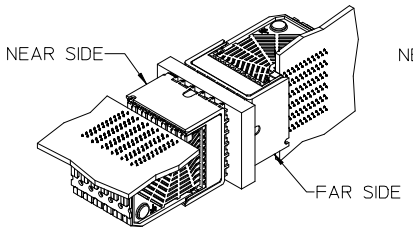


OPTION 90

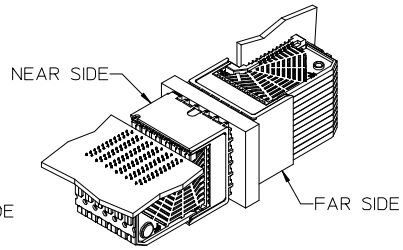


OPTION 270

NOTES:

SIGNAL PAIRS (SHARED VIAS)

NEAR SIDE GROUNDS

FAR SIDE GROUNDS

| | | | | | | | |
|---|---|---|---|---|---|---|---|
| SEE SHEET 1 | QUALITY SYMBOLS | GENERAL TOLERANCES (UNLESS SPECIFIED) | DIMENSION STYLE MM ONLY | SCALE 4:1 | DESIGN UNITS METRIC | THIRD ANGLE PROJECTION | |
| EC NO: UCP2013-1898 2012/11/12 | | mm / INCH | DRAWN BY JLAURX DATE 1/28/05 | TITLE I-TRAC BACKPLANE HEADER UNGUIDED ASSEMBLY SALES DRAWING | | | |
| DRWN:MPOFF 2012/11/12 | | 4 PLACES ± --- / ± --- | CHECKED BY BPISZCZOR DATE 6/02/06 | | | | |
| CH'KD:MWOLFE 2012/11/12 | | 3 PLACES ± --- / ± --- | APPROVED BY CBIXLER DATE 6/02/06 | molex | | | |
| APPR:SMILLER 2012/12/21 | | 2 PLACES ± 0.13 / ± --- | MATERIAL NO. SEE TABLE | DOCUMENT NO. SD-75705-001 | SHEET NO. 4 OF 4 | | |
| DESCRIPTION | | 1 PLACE ± 0.25 / ± --- | | | | | |
| REV | | 0 PLACE ± / ± | | | | | |
| | | ANGULAR ±1/2° | | | | | |
| | | DRAFT WHERE APPLICABLE MUST REMAIN WITHIN DIMENSIONS | SIZE C | THIS DRAWING CONTAINS INFORMATION THAT IS PROPRIETARY TO MOLEX INCORPORATED AND SHOULD NOT BE USED WITHOUT WRITTEN PERMISSION | | | |

Компания «ЭлектроПласт» предлагает заключение долгосрочных отношений при поставках импортных электронных компонентов на взаимовыгодных условиях!

Наши преимущества:

- Оперативные поставки широкого спектра электронных компонентов отечественного и импортного производства напрямую от производителей и с крупнейших мировых складов;
- Поставка более 17-ти миллионов наименований электронных компонентов;
- Поставка сложных, дефицитных, либо снятых с производства позиций;
- Оперативные сроки поставки под заказ (от 5 рабочих дней);
- Экспресс доставка в любую точку России;
- Техническая поддержка проекта, помощь в подборе аналогов, поставка прототипов;
- Система менеджмента качества сертифицирована по Международному стандарту ISO 9001;
- Лицензия ФСБ на осуществление работ с использованием сведений, составляющих государственную тайну;
- Поставка специализированных компонентов (Xilinx, Altera, Analog Devices, Intersil, Interpoint, Microsemi, Aeroflex, Peregrine, Syfer, Eurofarad, Texas Instrument, Miteq, Cobham, E2V, MA-COM, Hittite, Mini-Circuits,General Dynamics и др.);

Помимо этого, одним из направлений компании «ЭлектроПласт» является направление «Источники питания». Мы предлагаем Вам помощь Конструкторского отдела:

- Подбор оптимального решения, техническое обоснование при выборе компонента;
- Подбор аналогов;
- Консультации по применению компонента;
- Поставка образцов и прототипов;
- Техническая поддержка проекта;
- Защита от снятия компонента с производства.

**Как с нами связаться**

**Телефон:** 8 (812) 309 58 32 (многоканальный)
**Факс:** 8 (812) 320-02-42
**Электронная почта:** org@eplast1.ru
**Адрес:** 198099, г. Санкт-Петербург, ул. Калинина, дом 2, корпус 4, литера А.