THIS DRAWING IS UNPUBLISHED. RELEASED FOR PUBLICATION SEP ,2005.
© COPYRIGHT 2005 By – ALL RIGHTS RESERVED.

LOC	DIST
J	–

REVISIONS
変更

P	LTR	DESCRIPTION	DATE	DWN	APVD
	F3	REVISED PER ECO-11-005033	24MAR11	RK	HMR

NOTICE: THIS COMMUNICATION INCLUDES TE CONNECTIVITY CONFIDENTIAL OR PROPRIETARY INFORMATION THAT MAY ALSO BE LEGALLY PRIVILEGED.

TOOL STATUS	PART NUMBER MARKING 6	CONTACT ALEA PLATING SPEC J 3	DIM H	SCREW SIZE DIM G 5	DIM F	DIM E	DIM D	DIM C	DIM B	DIM A	BOSS 4	PACKING	CONNECTOR TYPE	PART NUMBER
AVAILABLE	WITHOUT P/N	Au 0.1um MIN OVER PdNi 0.2um MIN	–	–	0.5	10.55	–	–	1.1	1.1	WITHOUT BOSS	EMBOSS PACKING (SEE SHEET 2)	WITHOUT FLANGE TYPE (SEE SHEET 6)	9-1747981-2
AVAILABLE	WITH P/N	Au 0.1um MIN OVER PdNi 0.2um MIN	–	M3 x 0.5	1.0	10.55	12.75	10.08	2.2	1.8	WITH BOSS	SOFT TRAY PACKING (SEE SHEET 4)	WITH FLANGE TYPE (SEE SHEET 7)	9-1747981-1
AVAILABLE	WITHOUT P/N	Au 0.1um MIN OVER PdNi 0.2um MIN	–	M3 x 0.5	0.5	10.05	10.95	7.98	2.2	1.8	WITHOUT BOSS	CLEAR TRAY PACKING (SEE SHEET 4)	WITH FLANGE TYPE (SEE SHEET 7)	8-1747981-1
AVAILABLE	WITHOUT P/N	Au 0.1um MIN OVER PdNi 0.2um MIN	–	M3 x 0.5	1.0	10.55	12.75	10.08	2.2	1.8	WITH BOSS	SOFT TRAY PACKING (SEE SHEET 4)	WITH FLANGE TYPE (SEE SHEET 7)	3-1747981-1
NOT AVAILABLE	WITHOUT P/N	Au 0.1um MIN OVER PdNi 0.2um MIN	16.3	#4-40 UNC	0.5	10.55	12.75	10.08	2.2	1.8	WITH BOSS	EMBOSS PACKING (SEE SHEET 3)	WITH FLANGE TYPE (SEE SHEET 7)	2-1747981-4
AVAILABLE	WITHOUT P/N	Au 0.76um MIN	16.3	M3 x 0.5	1.0	10.55	12.75	10.08	2.2	1.8	WITHOUT BOSS	EMBOSS PACKING (SEE SHEET 3)	WITH FLANGE TYPE (SEE SHEET 7)	2-1747981-3
NOT AVAILABLE	WITHOUT P/N	Au 0.1um MIN OVER PdNi 0.2um MIN	–	#4-40 UNC	0.5	10.05	12.75	10.08	2.2	1.8	WITHOUT BOSS	HARDTRAY PACKING (–)	WITH FLANGE TYPE (SEE SHEET 7)	2-1747981-2
AVAILABLE	WITHOUT P/N	Au 0.76um MIN	–	M3 x 0.5	1.0	10.55	12.75	10.08	2.2	1.8	WITHOUT BOSS	SOFT TRAY PACKING (SEE SHEET 4)	WITH FLANGE TYPE (SEE SHEET 7)	2-1747981-1
AVAILABLE	WITHOUT P/N	Au 0.1um MIN OVER PdNi 0.2um MIN	–	M3 x 0.5	1.0	10.55	12.75	10.08	1.5	1.5	WITHOUT BOSS	SOFT TRAY PACKING (SEE SHEET 4)	WITH FLANGE TYPE (SEE SHEET 7)	1-1747981-8
AVAILABLE	WITHOUT P/N	Au 0.1um MIN OVER PdNi 0.2um MIN	16.3	M3 x 0.5	1.0	10.55	12.75	10.08	2.2	1.8	WITHOUT BOSS	EMBOSS PACKING (SEE SHEET 3)	WITH FLANGE TYPE (SEE SHEET 7)	1-1747981-7
AVAILABLE	WITHOUT P/N	Au 0.1um MIN OVER PdNi 0.2um MIN	–	M3 x 0.5	0.5	10.05	10.95	7.98	2.2	1.8	WITHOUT BOSS	SOFT TRAY PACKING (SEE SHEET 5)	WITH FLANGE TYPE (SEE SHEET 7)	1-1747981-6
AVAILABLE	WITHOUT P/N	Au 0.1um MIN OVER PdNi 0.2um MIN	14.3	M3 x 0.5	0.5	10.05	10.95	7.98	1.5	1.5	WITHOUT BOSS	EMBOSS PACKING (SEE SHEET 3)	WITH FLANGE TYPE (SEE SHEET 7)	1-1747981-5
AVAILABLE	WITHOUT P/N	Au 0.1um MIN OVER PdNi 0.2um MIN	–	M3 x 0.5	1.0	10.55	12.75	10.08	2.2	1.8	WITHOUT BOSS	SOFT TRAY PACKING (SEE SHEET 4)	WITH FLANGE TYPE (SEE SHEET 7)	1-1747981-4
AVAILABLE	WITHOUT P/N	Au 0.1um MIN OVER PdNi 0.2um MIN	–	#4-40 UNC	0.5	10.05	12.75	10.08	2.2	1.8	WITHOUT BOSS	SOFT TRAY PACKING (SEE SHEET 4)	WITH FLANGE TYPE (SEE SHEET 7)	1-1747981-3
AVAILABLE	WITHOUT P/N	Au 0.1um MIN OVER PdNi 0.2um MIN	–	M3 x 0.5	0.5	10.05	10.95	7.98	1.5	1.5	WITHOUT BOSS	SOFT TRAY PACKING (SEE SHEET 4)	WITH FLANGE TYPE (SEE SHEET 7)	1-1747981-2
AVAILABLE	WITHOUT P/N	Au 0.1um MIN OVER PdNi 0.2um MIN	–	M3 x 0.5	0.5	10.05	10.95	7.98	2.2	1.8	WITHOUT BOSS	SOFT TRAY PACKING (SEE SHEET 4)	WITH FLANGE TYPE (SEE SHEET 7)	1-1747981-1
AVAILABLE	WITHOUT P/N	Au 0.1um MIN OVER PdNi 0.2um MIN	–	–	0.5	10.05	–	–	1.5	1.5	WITHOUT BOSS	EMBOSS PACKING (SEE SHEET 2)	WITHOUT FLANGE TYPE (SEE SHEET 6)	1747981-2
AVAILABLE	WITHOUT P/N	Au 0.1um MIN OVER PdNi 0.2um MIN	–	–	0.5	10.05	–	–	2.2	1.8	WITHOUT BOSS	EMBOSS PACKING (SEE SHEET 2)	WITHOUT FLANGE TYPE (SEE SHEET 6)	1747981-1

1 CONTACT COPLANALITY IS 0.1 MAXIMUM.
2 THIS DIMENSION MEANS CENTER OF THE POCKET.
3 FINISH
CONTACT: CONTACT AREA J: SEE TABLE
2μm MIN Sn PLATING ON SOLDERING AREA
2μm MIN Ni UNDER PLATING ALL OVER
SHELL: 1μm MIN Sn PLATING ALL OVER
1μm MIN Ni UNDER PLATING ALL OVER

4 REFER TO THE TABLE FOR BOSS.
5 SCREW SIZE
6 PART NUMBER MAKING

THIS DRAWING IS A CONTROLLED DOCUMENT.

DIMENSIONS: 単位： 粍 mm

TOLERANCES UNLESS OTHERWISE SPECIFIED: 一般公差

0 PLC	± 0.2
1 PLC	± 0.2
2 PLC	± 0.2
3 PLC	± 0.2
4 PLC	± 0.2
ANGLES	± –

MATERIAL 材料

FINISH 仕上

DWN	Y.HIRATA	15SEP2005
CHK	T.KIMURA	15SEP2005
APVD	K.IKEGAMI	15SEP2005
PRODUCT SPEC 製品規格	108-78180-1	
APPLICATION SPEC 取付適用規格		
WEIGHT		

TE Connectivity

NAME 名称: HDMI 19 POS RECEPTACLE ASSY SMT TYPE –LEAD FREE–

SIZE	CAGE CODE	DRAWING NO 番号	RESTRICTED TO
A3	00779	C-1747981	–

CUSTOMER DRAWING | SCALE 尺度 NTS | SHEET 1 OF 8 | REV F3

THIS DRAWING IS UNPUBLISHED. RELEASED FOR PUBLICATION SEP ,2005.
© COPYRIGHT 2005 By – ALL RIGHTS RESERVED.

LOC	DIST
J	–

REVISIONS 変更

P	LTR	DESCRIPTION	DATE	DWN	APVD
	–	SEE SHEET 1	–	–	–

NOTICE: THIS COMMUNICATION INCLUDES TE CONNECTIVITY CONFIDENTIAL
OR PROPRIETARY INFORMATION THAT MAY ALSO BE LEGALLY PRIVILEGED.

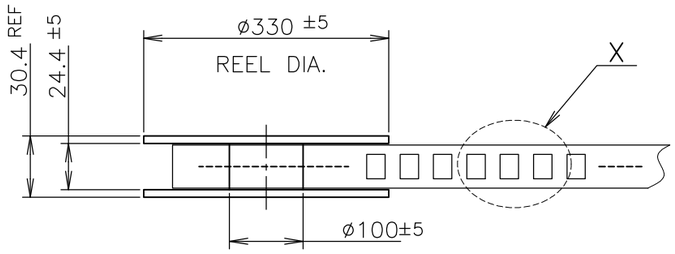

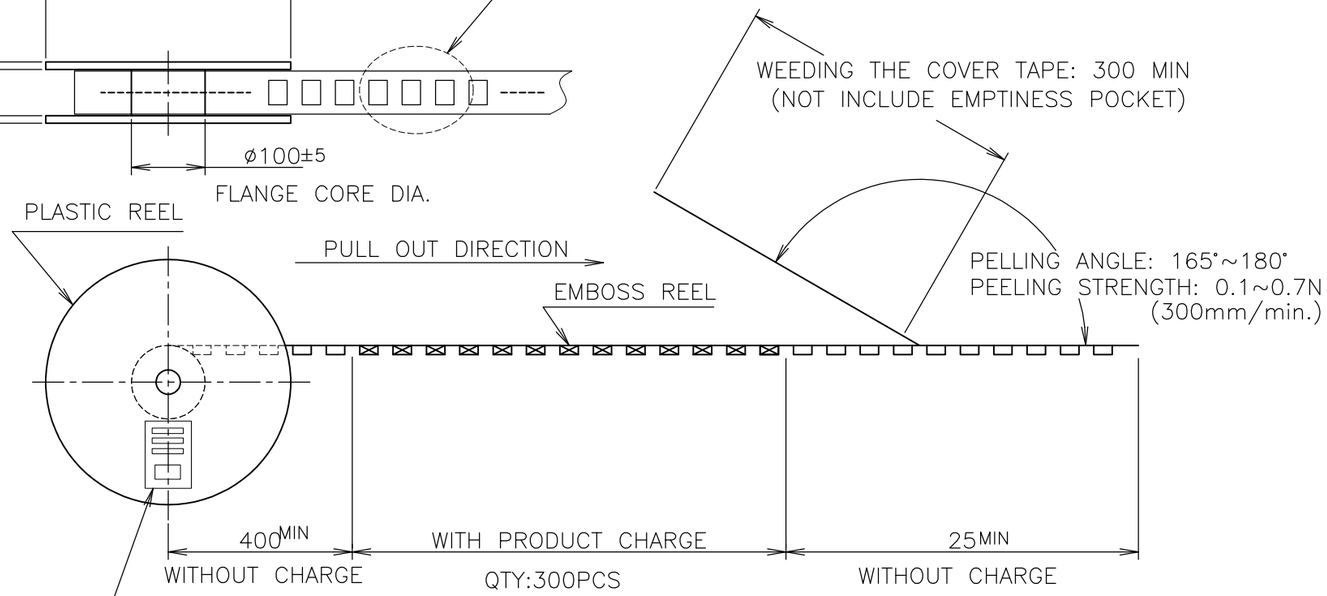

LABEL DESCRIPTION

TE CONNECTIVITY P/N.: 1747981–*
QTY: 300 pcs
D/C:
MADE IN CHINA

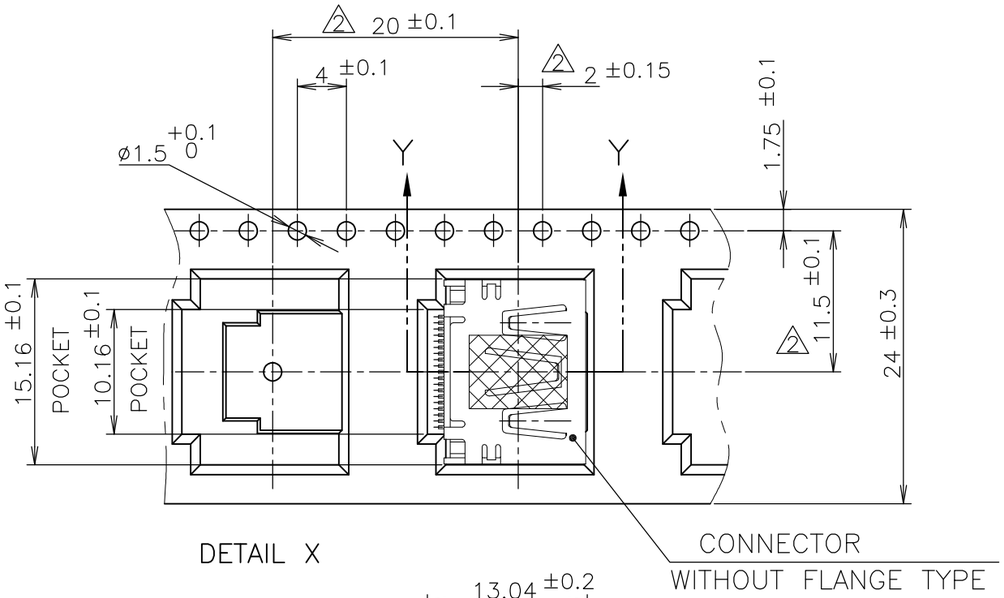

DETAIL X

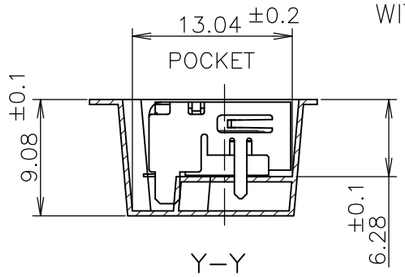

Y–Y

QTY	CONNECTOR TYPE	PART NUMBER
300	WITHOUT FLANGE TYPE	9–1747981–2
300	WITHOUT FLANGE TYPE	1747981–2
300	WITHOUT FLANGE TYPE	1747981–1

THIS DRAWING IS A CONTROLLED DOCUMENT.

DIMENSIONS: 単位： 耗 mm

TOLERANCES UNLESS OTHERWISE SPECIFIED: 一般公差

0 PLC	± 0.2
1 PLC	± 0.2
2 PLC	± 0.2
3 PLC	± 0.2
4 PLC	± 0.2
ANGLES	± –

MATERIAL 材料

FINISH 仕上

DWN
CHK
APVD
PRODUCT SPEC 製品規格 108–78180–1
APPLICATION SPEC 取付適用規格
WEIGHT

TE Connectivity

NAME 名称: HDMI 19 POS RECEPTACLE ASSY SMT TYPE –LEAD FREE–

SIZE	CAGE CODE	DRAWING NO 番号	RESTRICTED TO
A3	00779	C–1747981	–

CUSTOMER DRAWING | SCALE 尺度 NTS | SHEET 2 OF 8 | REV F3

THIS DRAWING IS UNPUBLISHED. RELEASED FOR PUBLICATION SEP ,2005.
© COPYRIGHT 2005 By – ALL RIGHTS RESERVED.

LOC	DIST
J	–

REVISIONS 変更

P	LTR	DESCRIPTION	DATE	DWN	APVD
	–	SEE SHEET 1	–	–	–

NOTICE: THIS COMMUNICATION INCLUDES TE CONNECTIVITY CONFIDENTIAL OR PROPRIETARY INFORMATION THAT MAY ALSO BE LEGALLY PRIVILEGED.

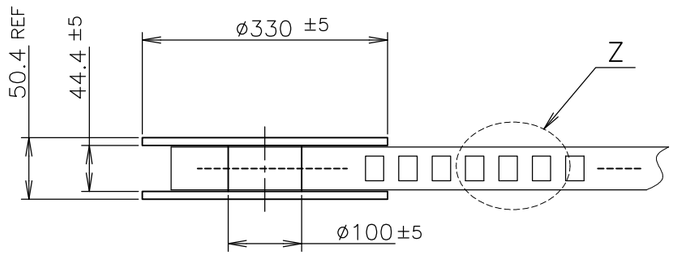

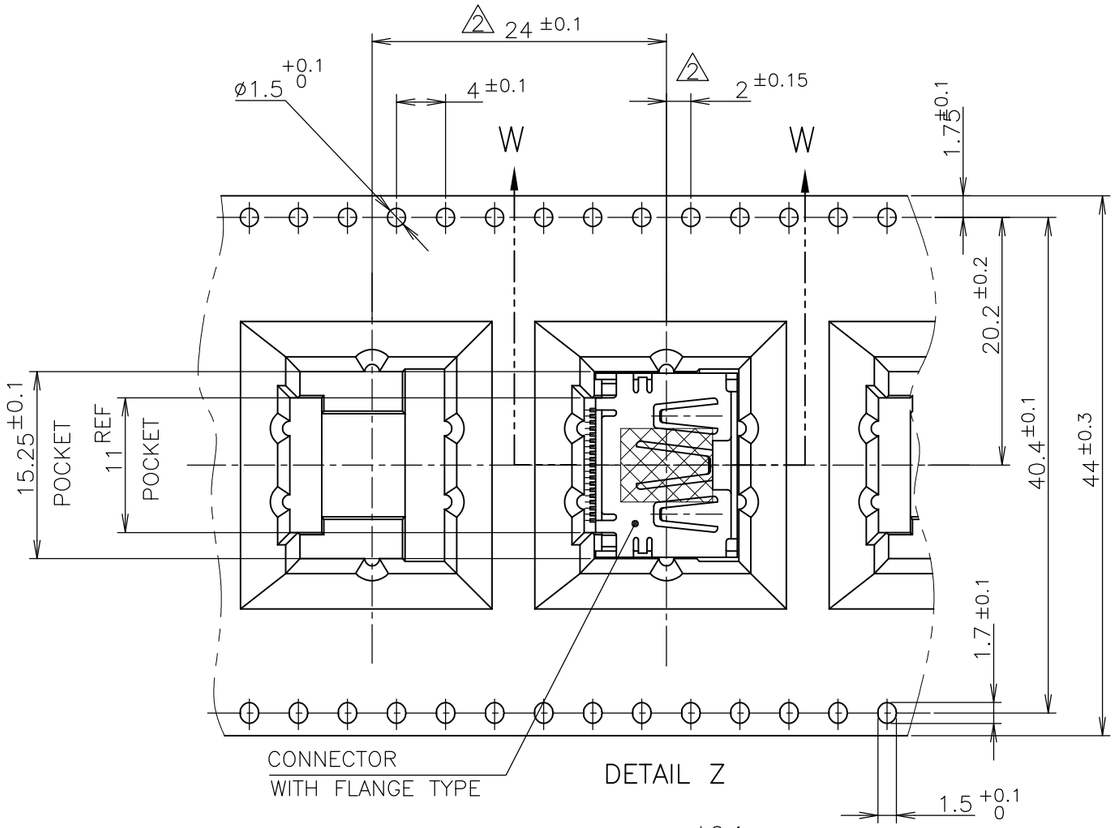

DETAIL Z

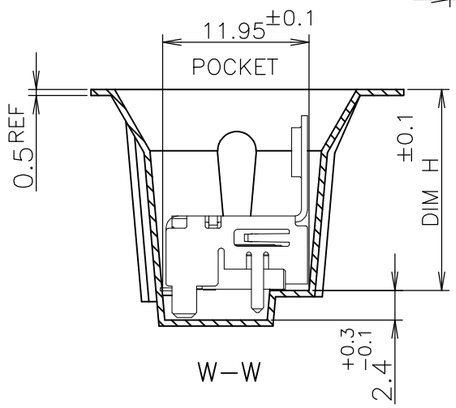

W–W

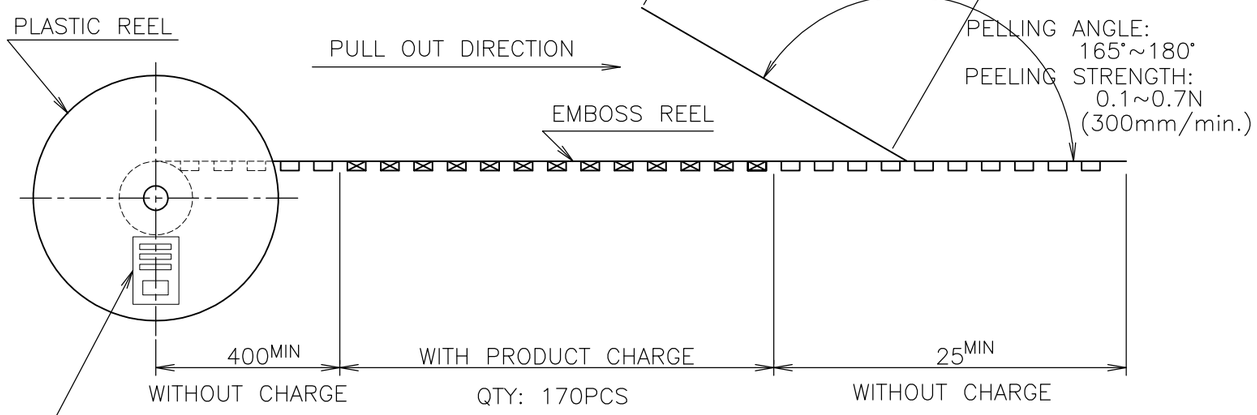

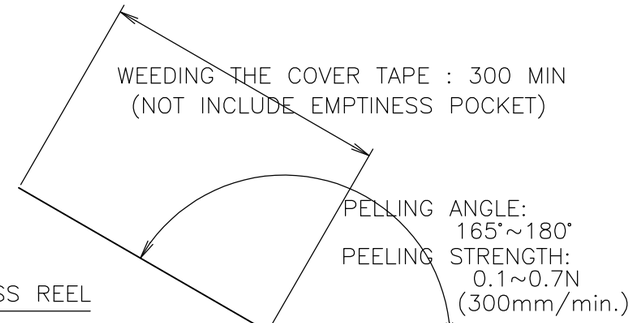

LABEL DESCRIPTION

TE CONNECTIVITY P/N.: *–1747981–*
QTY: 170 pcs
D/C:
MADE IN CHINA

QTY	CONNECTOR TYPE	PART NUMBER
170	WITH FLANGE TYPE	2–1747981–4
170	WITH FLANGE TYPE	2–1747981–3
170	WITH FLANGE TYPE	1–1747981–7
170	WITH FLANGE TYPE	1–1747981–5

THIS DRAWING IS A CONTROLLED DOCUMENT.

DIMENSIONS: 単位： 粍 mm

TOLERANCES UNLESS OTHERWISE SPECIFIED: 一般公差

0 PLC	± 0.2
1 PLC	± 0.2
2 PLC	± 0.2
3 PLC	± 0.2
4 PLC	± 0.2
ANGLES	± –

MATERIAL 材料

FINISH 仕上

DWN

CHK

APVD

PRODUCT SPEC 製品規格 108–78180–1

APPLICATION SPEC 取付適用規格

WEIGHT

TE Connectivity

NAME 名称: HDMI 19 POS RECEPTACLE ASSY SMT TYPE –LEAD FREE–

SIZE	CAGE CODE	DRAWING NO 番号	RESTRICTED TO
A3	00779	C–1747981	–

CUSTOMER DRAWING

SCALE 尺度 NTS | SHEET 3 OF 8 | REV F3

THIS DRAWING IS UNPUBLISHED. RELEASED FOR PUBLICATION SEP ,2005.
© COPYRIGHT 2005 By – ALL RIGHTS RESERVED.

LOC	DIST
J	–

REVISIONS 変更

P	LTR	DESCRIPTION	DATE	DWN	APVD
	–	SEE SHEET 1	–	–	–

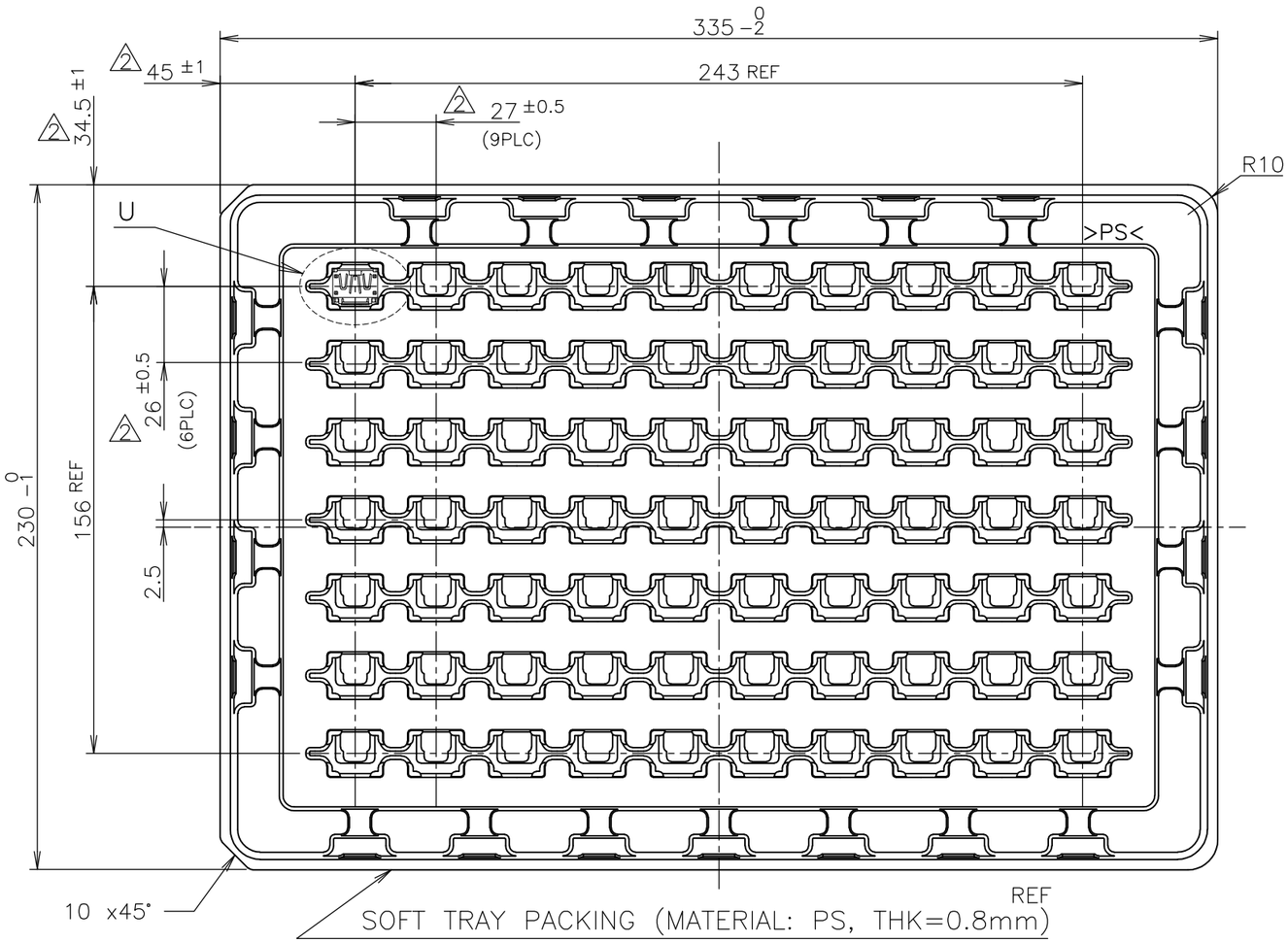

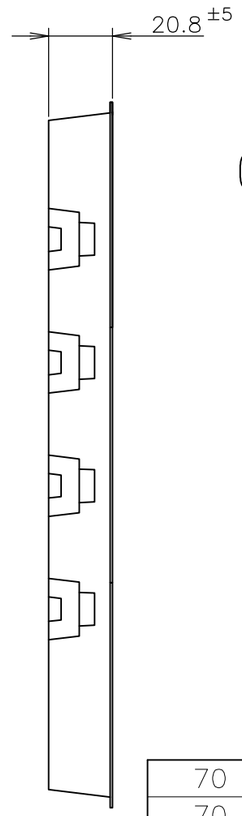

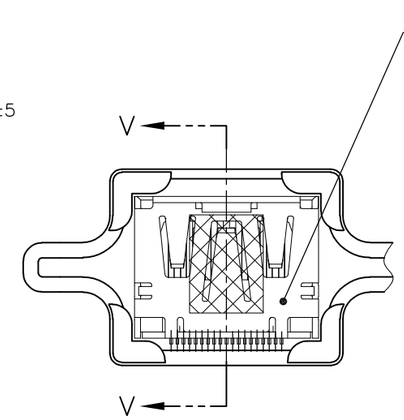

DETAIL U

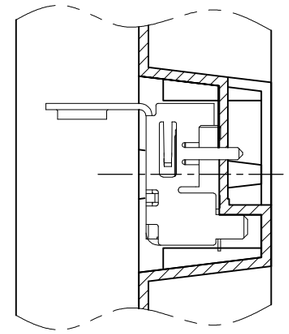

V–V

QTY	CONNECTOR TYPE	PART NUMBER
70	WITH FLANGE TYPE	9–1747981–1
70	WITH FLANGE TYPE	8–1747981–1
70	WITH FLANGE TYPE	3–1747981–1
70	WITH FLANGE TYPE	2–1747981–1
70	WITH FLANGE TYPE	1–1747981–8
70	WITH FLANGE TYPE	1–1747981–4
70	WITH FLANGE TYPE	1–1747981–3
70	WITH FLANGE TYPE	1–1747981–2
70	WITH FLANGE TYPE	1–1747981–1

NOTICE: THIS COMMUNICATION INCLUDES TE CONNECTIVITY CONFIDENTIAL OR PROPRIETARY INFORMATION THAT MAY ALSO BE LEGALLY PRIVILEGED.

THIS DRAWING IS A CONTROLLED DOCUMENT.

DIMENSIONS: 単位： 耗 mm

TOLERANCES UNLESS OTHERWISE SPECIFIED: 一般公差

0 PLC	± 0.2	
1 PLC	± 0.2	
2 PLC	± 0.2	±0.3
3 PLC	± 0.2	
4 PLC	± 0.2	
ANGLES	± –	

MATERIAL 材料

FINISH 仕上

DWN

CHK

APVD

PRODUCT SPEC 製品規格 108–78180–1

APPLICATION SPEC 取付適用規格

WEIGHT

TE Connectivity

NAME 名称: HDMI 19 POS RECEPTACLE ASSY SMT TYPE –LEAD FREE–

SIZE	CAGE CODE	DRAWING NO 番号	RESTRICTED TO
A3	00779	C–1747981	–

CUSTOMER DRAWING

SCALE 尺度	SHEET	REV
NTS	4 OF 8	F3

THIS DRAWING IS UNPUBLISHED. RELEASED FOR PUBLICATION SEP ,2005.
© COPYRIGHT 2005 By – ALL RIGHTS RESERVED.

LOC	DIST
J	–

REVISIONS 変更

P	LTR	DESCRIPTION	DATE	DWN	APVD
	–	SEE SHEET 1	–	–	–

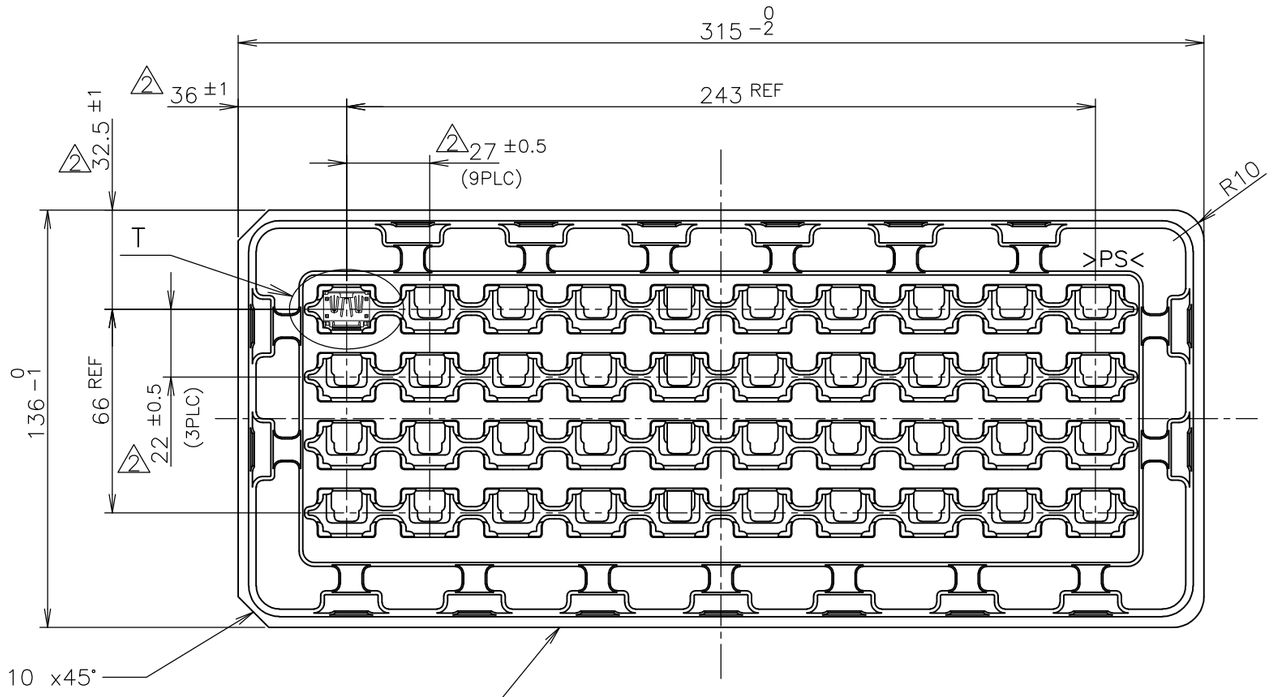

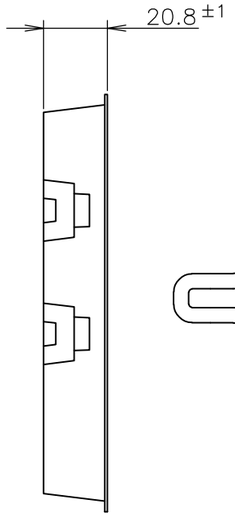

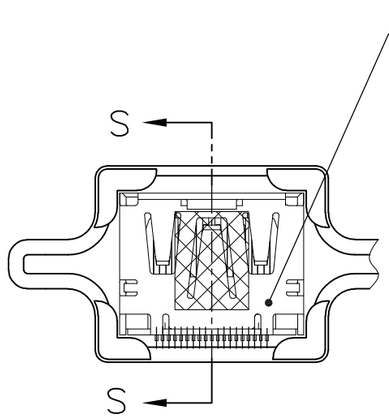

DETAIL T
(SCALE 2:1)

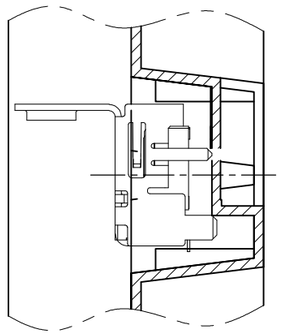

S–S
(SCALE 2:1)

SOFT TRAY PACKING (MATERIAL: PS, THK=0.8mm) REF

NOTICE: THIS COMMUNICATION INCLUDES TE CONNECTIVITY CONFIDENTIAL OR PROPRIETARY INFORMATION THAT MAY ALSO BE LEGALLY PRIVILEGED.

THIS DRAWING IS A CONTROLLED DOCUMENT.

DIMENSIONS: 単位： 耗 mm

TOLERANCES UNLESS OTHERWISE SPECIFIED: 一般公差

0 PLC	± 0.2	
1 PLC	± 0.2	
2 PLC	± 0.2	±0.3
3 PLC	± 0.2	
4 PLC	± 0.2	
ANGLES	± –	

MATERIAL 材料

FINISH 仕上

QTY	CONNECTOR TYPE	PART NUMBER
40	WITH FLANGE TYPE	1–1747981–6

DWN
CHK
APVD
PRODUCT SPEC 製品規格 108–78180–1
APPLICATION SPEC 取付適用規格
WEIGHT

TE Connectivity

NAME 名称: HDMI 19 POS RECEPTACLE ASSY SMT TYPE –LEAD FREE–

SIZE	CAGE CODE	DRAWING NO 番号	RESTRICTED TO
A3	00779	C–1747981	–

CUSTOMER DRAWING | SCALE 尺度 NTS | SHEET 5 OF 8 | REV F3

THIS DRAWING IS UNPUBLISHED. RELEASED FOR PUBLICATION SEP ,2005.
© COPYRIGHT 2005 By – ALL RIGHTS RESERVED.

LOC	DIST
J	–

REVISIONS
変更

P	LTR	DESCRIPTION	DATE	DWN	APVD
	–	SEE SHEET 1	–	–	–

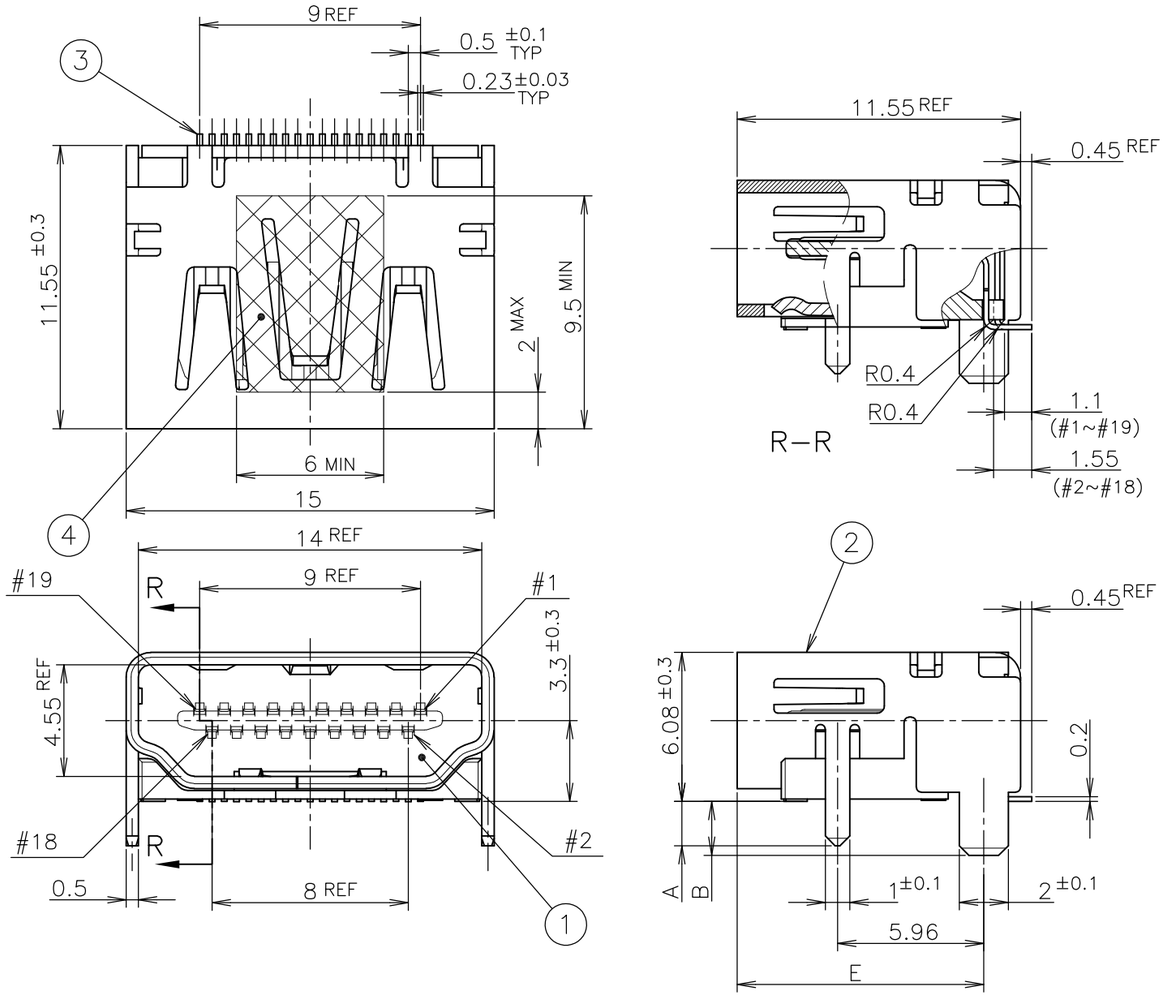

CONNECTOR WITHOUT FLANGE TYPE

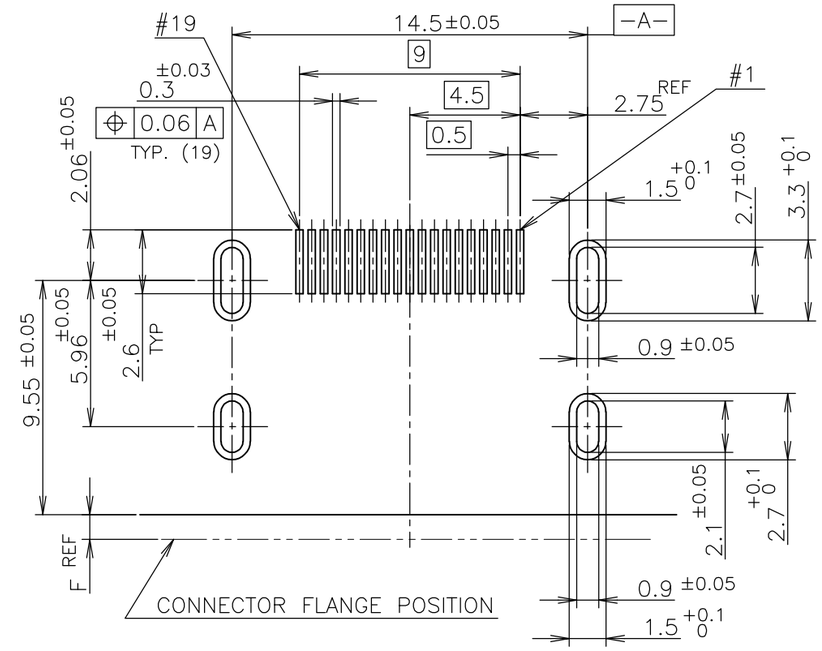

P.C.B LAYOUT
SHOWN AS CONNECTOR MOUNTING SIDE
TOLERANCE: NON–CUMULATIVE
(REFERENCE)

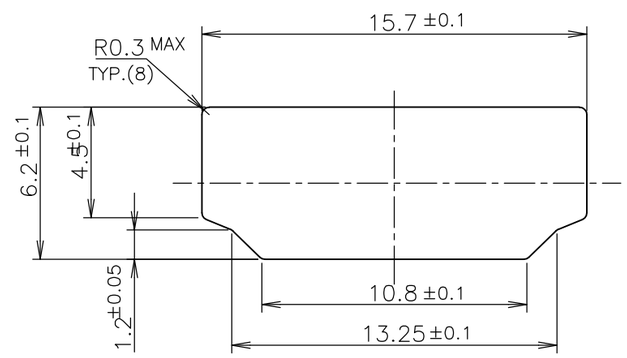

PANEL CUT OUT DIMENSION
(REFERENCE)

NOTICE: THIS COMMUNICATION INCLUDES TE CONNECTIVITY CONFIDENTIAL OR PROPRIETARY INFORMATION THAT MAY ALSO BE LEGALLY PRIVILEGED.

FINISH	MATERIAL	QTY	DISCRIPTION	ITEM
———	POLYMIDE	1	POLYIMIDE TAPE	4
3	COPPER ALLOY	19	CONTACT	3
3	COPPER ALLOY	1	SHELL	2
———	THERMOPLASTIC UL94V–0, BLACK COLOR	1	HOUSING	1

THIS DRAWING IS A CONTROLLED DOCUMENT.

DIMENSIONS: 単位： 耗 mm

TOLERANCES UNLESS OTHERWISE SPECIFIED: 一般公差

0 PLC	± 0.2
1 PLC	± 0.2
2 PLC	± 0.2
3 PLC	± 0.2
4 PLC	± 0.2
ANGLES	± –

MATERIAL 材料

FINISH 仕上

DWN
CHK
APVD
PRODUCT SPEC 製品規格 108–78180–1
APPLICATION SPEC 取付適用規格
WEIGHT

TE Connectivity

NAME 名称
HDMI 19 POS
RECEPTACLE ASSY SMT TYPE
–LEAD FREE–

SIZE	CAGE CODE	DRAWING NO 番号	RESTRICTED TO
A3	00779	C–1747981	–

CUSTOMER DRAWING | SCALE 尺度 4:1 | SHEET 6 OF 8 | REV F3

1470–19 (3/11)

THIS DRAWING IS UNPUBLISHED. RELEASED FOR PUBLICATION SEP ,2005.
© COPYRIGHT 2005 By – ALL RIGHTS RESERVED.

LOC	DIST
J	–

REVISIONS
変更

P	LTR	DESCRIPTION	DATE	DWN	APVD
	–	SEE SHEET 1	–	–	–

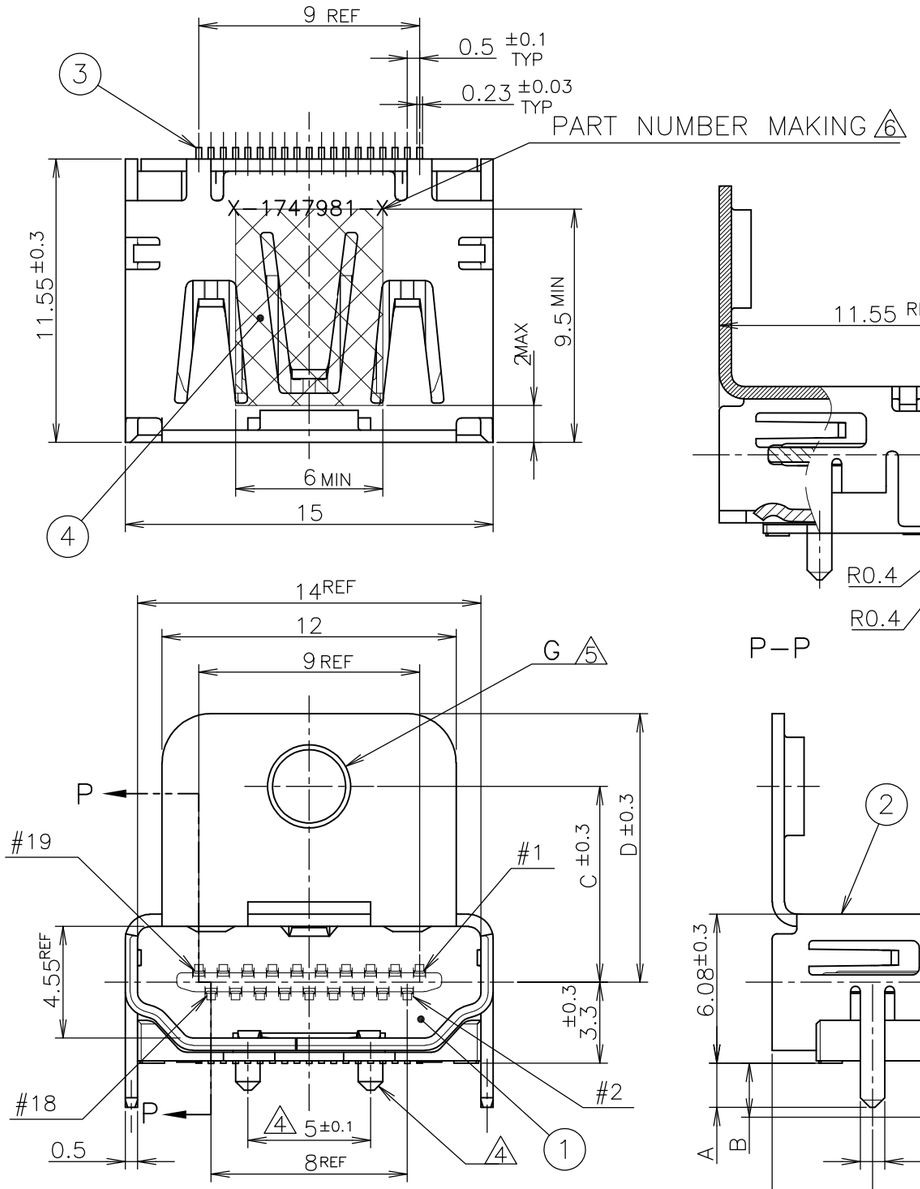

CONNECTOR WITH FLANGE TYPE

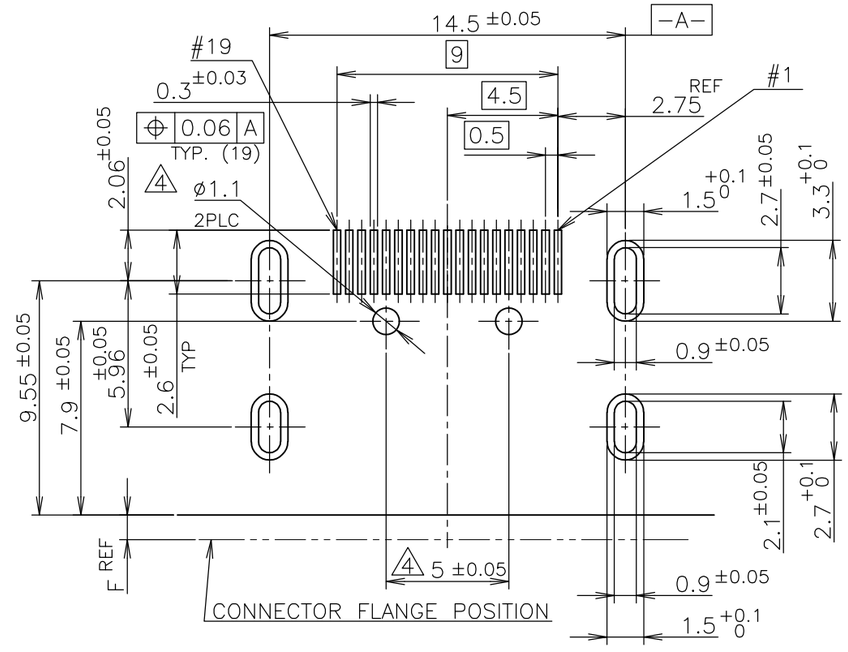

P.C.B LAYOUT
SHOWN AS CONNECTOR MOUNTING SIDE
TOLERANCE: NON–CUMULATIVE
(REFERENCE)

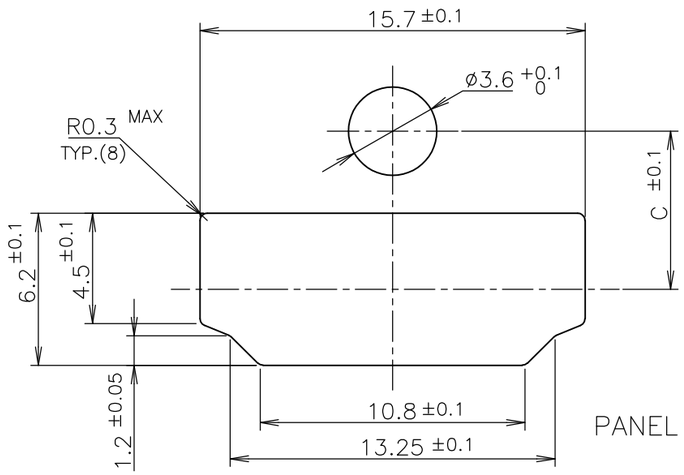

PANEL CUT OUT DIMENSION
(REFERENCE)

NOTICE: THIS COMMUNICATION INCLUDES TE CONNECTIVITY CONFIDENTIAL OR PROPRIETARY INFORMATION THAT MAY ALSO BE LEGALLY PRIVILEGED.

FINISH	MATERIAL	QTY	DISCRIPTION	ITEM
	POLYMIDE	1	POLYIMIDE TAPE	4
3	COPPER ALLOY	19	CONTACT	3
3	COPPER ALLOY	1	SHELL	2
	THERMOPLASTIC UL94V–0, BLACK COLOR	1	HOUSING	1

THIS DRAWING IS A CONTROLLED DOCUMENT.

DIMENSIONS: 単位： 粍 mm

TOLERANCES UNLESS OTHERWISE SPECIFIED: 一般公差

0 PLC	± 0.2
1 PLC	± 0.2
2 PLC	± 0.2
3 PLC	± 0.2
4 PLC	± 0.2
ANGLES	± –

MATERIAL 材料

FINISH 仕上

DWN
CHK
APVD
PRODUCT SPEC 製品規格 108–78180–1
APPLICATION SPEC 取付適用規格
WEIGHT

CUSTOMER DRAWING

TE Connectivity

NAME 名称: HDMI 19 POS RECEPTACLE ASSY SMT TYPE –LEAD FREE–

SIZE	CAGE CODE	DRAWING NO 番号	RESTRICTED TO
A3	00779	C–1747981	–

SCALE 尺度	SHEET	REV
NTS	7 OF 8	F3

THIS DRAWING IS UNPUBLISHED. RELEASED FOR PUBLICATION SEP ,2005.
© COPYRIGHT 2005 By – ALL RIGHTS RESERVED.

LOC	DIST
J	–

REVISIONS
変更

P	LTR	DESCRIPTION	DATE	DWN	APVD
	–	SEE SHEET 1	–	–	–

NOTICE: THIS COMMUNICATION INCLUDES TE CONNECTIVITY CONFIDENTIAL
OR PROPRIETARY INFORMATION THAT MAY ALSO BE LEGALLY PRIVILEGED.

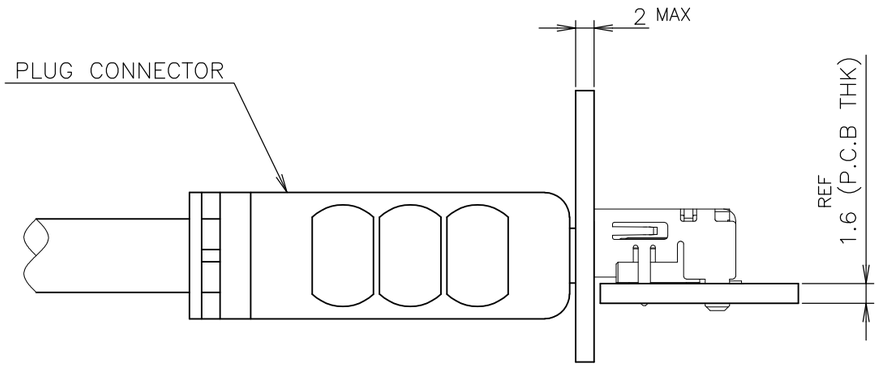

CONNECTOR
WITHOUT FLANGE TYPE

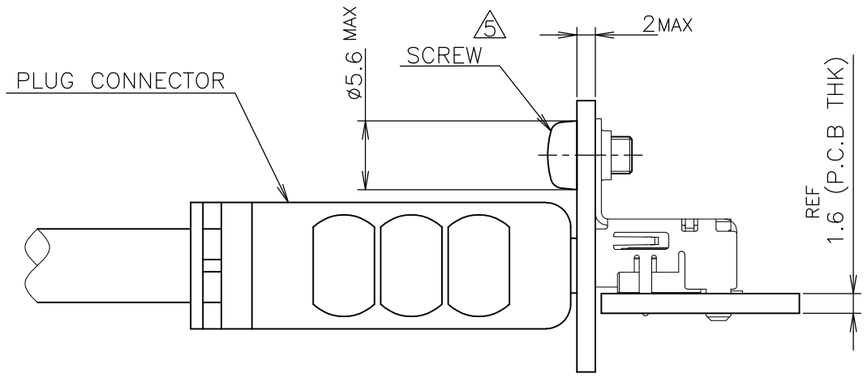

CONNECTOR
WITH FLANGE TYPE

MATING CONDITION (REFERENCE)
(SCALE 2:1)

THIS DRAWING IS A CONTROLLED DOCUMENT.

DIMENSIONS:
単位： 耗
mm

TOLERANCES UNLESS OTHERWISE SPECIFIED:
一般公差

0 PLC	± 0.2
1 PLC	± 0.2
2 PLC	± 0.2
3 PLC	± 0.2
4 PLC	± 0.2
ANGLES	± –

MATERIAL
材料

FINISH
仕上

DWN
CHK
APVD
PRODUCT SPEC
製品規格
108-78180-1
APPLICATION SPEC
取付適用規格
WEIGHT

TE Connectivity

NAME
名称
HDMI 19 POS
RECEPTACLE ASSY SMT TYPE
-LEAD FREE-

SIZE	CAGE CODE	DRAWING NO 番号	RESTRICTED TO
A3	00779	C-1747981	–

CUSTOMER DRAWING

SCALE 尺度	SHEET	REV
2:1	8 OF 8	F3

Компания «ЭлектроПласт» предлагает заключение долгосрочных отношений при поставках импортных электронных компонентов на взаимовыгодных условиях!

Наши преимущества:

- Оперативные поставки широкого спектра электронных компонентов отечественного и импортного производства напрямую от производителей и с крупнейших мировых складов;
- Поставка более 17-ти миллионов наименований электронных компонентов;
- Поставка сложных, дефицитных, либо снятых с производства позиций;
- Оперативные сроки поставки под заказ (от 5 рабочих дней);
- Экспресс доставка в любую точку России;
- Техническая поддержка проекта, помощь в подборе аналогов, поставка прототипов;
- Система менеджмента качества сертифицирована по Международному стандарту ISO 9001;
- Лицензия ФСБ на осуществление работ с использованием сведений, составляющих государственную тайну;
- Поставка специализированных компонентов (Xilinx, Altera, Analog Devices, Intersil, Interpoint, Microsemi, Aeroflex, Peregrine, Syfer, Eurofarad, Texas Instrument, Miteq, Cobham, E2V, MA-COM, Hittite, Mini-Circuits,General Dynamics и др.);

Помимо этого, одним из направлений компании «ЭлектроПласт» является направление «Источники питания». Мы предлагаем Вам помощь Конструкторского отдела:

- Подбор оптимального решения, техническое обоснование при выборе компонента;
- Подбор аналогов;
- Консультации по применению компонента;
- Поставка образцов и прототипов;
- Техническая поддержка проекта;
- Защита от снятия компонента с производства.

Как с нами связаться

Телефон: 8 (812) 309 58 32 (многоканальный)
Факс: 8 (812) 320-02-42
Электронная почта: org@eplast1.ru
Адрес: 198099, г. Санкт-Петербург, ул. Калинина, дом 2, корпус 4, литера А.