# Features

# Regulated Converter

- Wide 4:1 input voltage range
- 1.6kVDC isolation for 24Vin and 48Vin, 3kVDC isolation for 110Vin
- Efficiency up to 92%
- Six-sided continuous shield
- EN50155, UL/IEC/EN60950-1 certified

RECOM
DC/DC Converter

# RP40-FR

## 40 Watt 2“ x 1“ Single and Dual Output

YEAR 3 warranty

c UL us E196683

CE

EN50155 certified
UL60950-1 certified
IEC/EN60950-1 certified
EN55032 compliant
EN55024 compliant
EN50121-3-2 compliant

REF DESIGN available

www.recom-power.com/eval-ref-boards

SURGE PROTECTOR available

https://www.recom-power.com/pdf/Powerline_DC-DC/RSPxxx-168.pdf

## Description

The RP40-FR series wide range input DC/DC converters have been especially designed for railway applications and are EN50155 certified. They are also certified to UL60950-1 and cUL 60950-1, this makes them ideal for all high input voltage telecom and industrial applications where approved safety standards are required.

## Selection Guide

| Part Number | Input Voltage Range [VDC] | Output Voltage [VDC] | Output Current [mA] | Input (1) Current [mA] | Efficiency (1) typ. [%] | Max. Capacitive Load (2) [µF] |
|---|---|---|---|---|---|---|
| RP40-243.3SFR (3,4) | 9-36 | 3.3 | 10000 | 1528 | 90 | 26600 |
| RP40-2405SFR (3,4) | 9-36 | 5 | 8000 | 1832 | 91 | 20000 |
| RP40-2412SFR (3,4) | 9-36 | 12 | 3333 | 1811 | 92 | 3900 |
| RP40-2415SFR (3,4) | 9-36 | 15 | 2666 | 1811 | 92 | 2600 |
| RP40-2424SFR (3,4) | 9-36 | 24 | 1666 | 1831 | 91 | 1300 |
| RP40-483.3SFR (3,4) | 18-75 | 3.3 | 10000 | 764 | 90 | 26600 |
| RP40-4805SFR (3,4) | 18-75 | 5 | 8000 | 916 | 91 | 20000 |
| RP40-4812SFR (3,4) | 18-75 | 12 | 3333 | 906 | 92 | 3900 |
| RP40-4815SFR (3,4) | 18-75 | 15 | 2666 | 906 | 92 | 2600 |
| RP40-4824SFR (3,4) | 18-75 | 24 | 1666 | 915 | 91 | 1300 |
| RP40-1103.3SFR (3,4) | 43-160 | 3.3 | 10000 | 341 | 88 | 26600 |
| RP40-11005SFR (3,4) | 43-160 | 5 | 8000 | 409 | 89 | 20000 |
| RP40-11012SFR (3,4) | 43-160 | 12 | 3333 | 402 | 90.5 | 3900 |
| RP40-11015SFR (3,4) | 43-160 | 15 | 2666 | 400 | 91 | 2600 |
| RP40-11024SFR (3,4) | 43-160 | 24 | 1666 | 404 | 90 | 1300 |
| RP40-2412DFR (3,4) | 9-36 | ±12 | ±1666 | 1851 | 90 | ±2600 |
| RP40-2415DFR (3,4) | 9-36 | ±15 | ±1333 | 1851 | 90 | ±1600 |
| RP40-2424DFR (3,4) | 9-36 | ±24 | ±833 | 1830 | 91 | ±650 |
| RP40-4812DFR (3,4) | 18-75 | ±12 | ±1666 | 925 | 90 | ±2600 |
| RP40-4815DFR (3,4) | 18-75 | ±15 | ±1333 | 741 | 90 | ±1600 |
| RP40-4824DFR (3,4) | 18-75 | ±24 | ±833 | 572 | 91 | ±650 |
| RP40-11012DFR (3,4) | 43-160 | ±12 | ±1666 | 408 | 89 | ±2600 |
| RP40-11015DFR (3,4) | 43-160 | ±15 | ±1333 | 408 | 89 | ±1600 |
| RP40-11024DFR (3,4) | 43-160 | ±24 | ±833 | 400 | 91 | ±650 |

**Notes:**

Note1: Maximum values at nominal input voltage and full load at +25°C ambient
Note2: Max. Cap load is tested at minimum input and constant resistive load

## Model Numbering

RP40-__ __ _FR/ _ -__

- nom. Input Voltage
- nom. Output Voltage
- Single or Dual
- *“Package (4)”*
- *“CTRL Logic (3)”*

**Notes:**

Note3: standard part is with suffix “P” for positive logic (1=ON, 0=OFF) or add suffix “N” instead for negative logic (0=ON, 1=OFF)
Note4: add suffix “-HC” for premounted Heat-sink with clips

**Ordering Examples**

RP40-2405SFR/P = 24V input, 5V output, single, positive Logic CTRL pin
RP40-4812DFR/N-HC = 48V input, ±12V output, dual, negative Logic CTRL pin, Heat-sink premounted

## Specifications (measured @ Ta= 25°C, nom. Vin, full load unless otherwise stated)

### BASIC CHARACTERISTICS

| Parameter | Condition | | Min. | Typ. | Max. |
|---|---|---|---|---|---|
| Input Filter | | | | | Pi-Type |
| Input Voltage Range | nom. Vin = 24VDC<br>nom. Vin = 48VDC<br>nom. Vin = 110VDC | | 9VDC<br>18VDC<br>43VDC | 24VDC<br>48VDC<br>110VDC | 36VDC<br>75VDC<br>160VDC |
| Input Surge Voltage | 1s max. | nom. Vin = 24VDC<br>nom. Vin = 48VDC<br>nom. Vin = 110VDC | | | 50VDC<br>100VDC<br>170VDC |
| Under Voltage Lockout (UVLO) | nom. Vin = 24VDC | DC-DC ON<br>DC-DC OFF | | 8VDC | 9VDC |
| | nom. Vin = 48VDC | DC-DC ON<br>DC-DC OFF | | 16VDC | 18VDC |
| | nom. Vin = 110VDC | DC-DC ON<br>DC-DC OFF | | 40VDC | 43VDC |
| Output Voltage Trimming | refer to<br>***„OUTPUT VOLTAGE TRIMMING“*** | 3.3Vout, 5Vout, 12Vout<br>15Vout, 24Vout | -10%<br>-10% | | +10%<br>+20% |
| Input Reflected Ripple Current | | | | 30mAp-p | |
| Start-up Time | Power up<br>ON/OFF CTRL | | | 60ms<br>60ms | |
| ON/OFF CTRL (5) | Positive Logic | DC-DC ON<br>DC-DC OFF | Open or 3.0VDC < $V_{CTRL}$< 12VDC<br>Short or 0VDC < $V_{CTRL}$< 1.2VDC | | |
| | Negative Logic | DC-DC ON<br>DC-DC OFF | Short or 0VDC < $V_{CTRL}$< 1.2VDC<br>Open or 3.0VDC < $V_{CTRL}$< 12VDC | | |
| Input Current of CTRL pin | DC-DC ON | | -0.5mA | | +0.5mA |
| Standby Current | DC-DC OFF | | | 3mA | |
| Internal Operating Frequency | | | 225kHz | 250kHz | 275kHz |
| Ripple and Noise | measured by 20MHz bandwidth with a 1µF/50V X7R MLCC | 3.3Vout, 5Vout<br>12Vout, 15Vout<br>24Vout | | 75mVp-p<br>100mVp-p<br>150mVp-p | 100mVp-p<br>125mVp-p<br>200mVp-p |

**Notes:**

Note5: The ON/OFF control function can be positive or negative logic. The pin voltage is referenced to -Vin pin

**RP40-2405SFR**

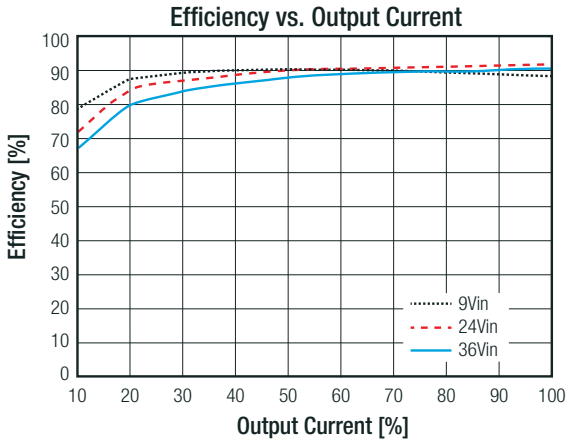


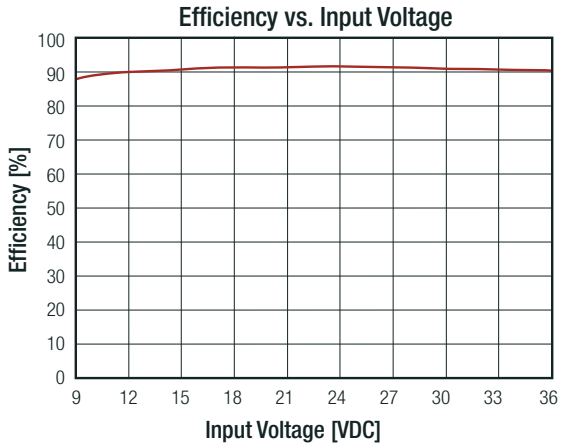


continued on next page

## Specifications (measured @ Ta= 25°C, nom. Vin, full load unless otherwise stated)

RP40-4805SFR

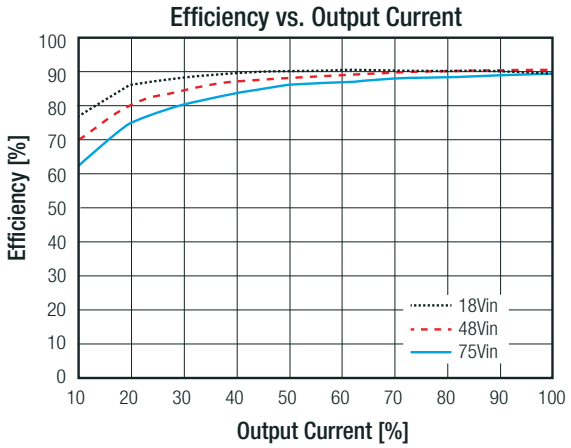


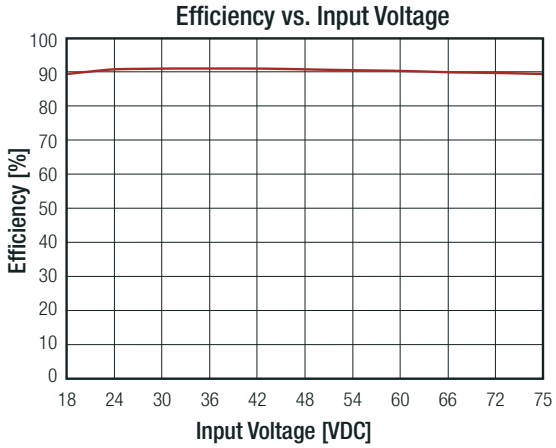


RP40-11005SFR

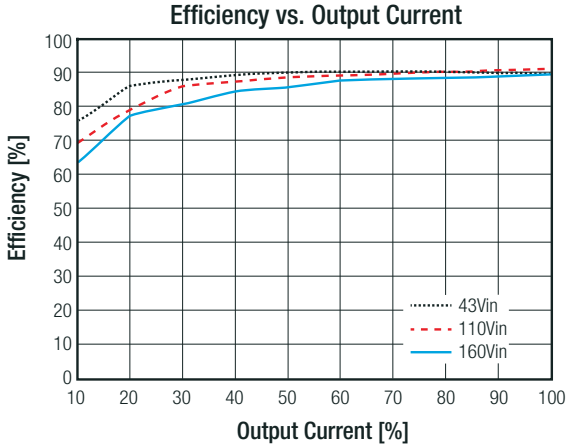


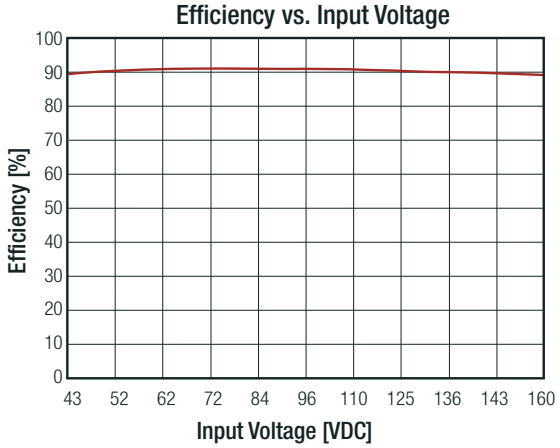


## OUTPUT VOLTAGE TRIMMING

### Output Voltage Trimming

Single output Powerline converters offer the feature of trimming the output voltage over a certain range around the nominal value by using external trim resistors. No general equation can be given for calculating the trim resistors, but the following trimtables give typical values for chosing these trimming resistors. If voltages between the given trim points are required, extrapolate between the two nearest given values to work out the resistor required or use a variable resistor to set the output voltage. Output can be externally trimmed by using the method shown below.

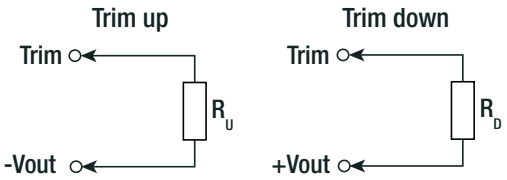


continued on next page

## Specifications (measured @ Ta= 25°C, nom. Vin, full load unless otherwise stated)

### RP40-xx3.3SFR

| Trim up | 1 | 2 | 3 | 4 | 5 | 6 | 7 | 8 | 9 | 10 | [%] |
|---|---|---|---|---|---|---|---|---|---|---|---|
| Vout = | 3.333 | 3.366 | 3.399 | 3.432 | 3.465 | 3.498 | 3.531 | 3.564 | 3.597 | 3.63 | [VDC] |
| $R_U$ = | 57.93 | 26.16 | 15.58 | 10.28 | 7.11 | 4.99 | 3.48 | 2.34 | 1.46 | 0.75 | [kΩ] |

| Trim down | 1 | 2 | 3 | 4 | 5 | 6 | 7 | 8 | 9 | 10 | [%] |
|---|---|---|---|---|---|---|---|---|---|---|---|
| Vout = | 3.267 | 3.234 | 3.201 | 3.168 | 3.135 | 3.102 | 3.069 | 3.036 | 3.003 | 2.97 | [VDC] |
| $R_D$ = | 69.47 | 31.23 | 18.49 | 12.12 | 8.29 | 5.74 | 3.92 | 2.56 | 1.50 | 0.65 | [kΩ] |

### RP40-xx05SFR

| Trim up | 1 | 2 | 3 | 4 | 5 | 6 | 7 | 8 | 9 | 10 | [%] |
|---|---|---|---|---|---|---|---|---|---|---|---|
| Vout = | 5.05 | 5.10 | 5.15 | 5.20 | 5.25 | 5.30 | 5.35 | 5.4 | 5.45 | 5.50 | [VDC] |
| $R_U$ = | 36.57 | 16.58 | 9.92 | 6.89 | 4.59 | 3.25 | 2.30 | 1.59 | 1.03 | 0.59 | [kΩ] |

| Trim down | 1 | 2 | 3 | 4 | 5 | 6 | 7 | 8 | 9 | 10 | [%] |
|---|---|---|---|---|---|---|---|---|---|---|---|
| Vout = | 4.95 | 4.90 | 4.85 | 4.80 | 4.75 | 4.70 | 4.65 | 4.60 | 4.55 | 4.50 | [VDC] |
| $R_D$ = | 45.533 | 20.612 | 12.306 | 8.152 | 5.66 | 3.999 | 2.812 | 1.922 | 1.23 | 0.676 | [kΩ] |

### RP40-xx12SFR

| Trim up | 1 | 2 | 3 | 4 | 5 | 6 | 7 | 8 | 9 | 10 | [%] |
|---|---|---|---|---|---|---|---|---|---|---|---|
| Vout = | 12.12 | 12.24 | 12.36 | 12.48 | 12.60 | 12.72 | 12.84 | 12.96 | 13.08 | 13.20 | [VDC] |
| $R_U$ = | 367.91 | 165.95 | 98.636 | 64.977 | 44.782 | 31.318 | 21.701 | 14.488 | 8.879 | 4.391 | [kΩ] |

| Trim down | 1 | 2 | 3 | 4 | 5 | 6 | 7 | 8 | 9 | 10 | [%] |
|---|---|---|---|---|---|---|---|---|---|---|---|
| Vout = | 11.88 | 11.76 | 11.64 | 11.52 | 11.40 | 11.28 | 11.16 | 11.04 | 10.92 | 10.8 | [VDC] |
| $R_D$ = | 460.99 | 207.95 | 123.6 | 81.423 | 56.118 | 39.249 | 27.199 | 18.162 | 11.132 | 5.509 | [kΩ] |

### RP40-xx15SFR

| Trim up | 1 | 2 | 3 | 4 | 5 | 6 | 7 | 8 | 9 | 10 | [%] |
|---|---|---|---|---|---|---|---|---|---|---|---|
| Vout = | 15.15 | 15.3 | 15.45 | 15.60 | 15.75 | 15.90 | 16.05 | 16.20 | 16.35 | 16.50 | [VDC] |
| $R_U$ = | 419.81 | 199.91 | 126.60 | 89.95 | 67.96 | 53.30 | 42.83 | 34.98 | 28.87 | 23.98 | [kΩ] |

| Trim up | 11 | 12 | 13 | 14 | 15 | 16 | 17 | 18 | 19 | 20 | [%] |
|---|---|---|---|---|---|---|---|---|---|---|---|
| Vout = | 16.650 | 16.800 | 16.950 | 17.100 | 17.250 | 17.400 | 17.550 | 17.700 | 17.850 | 18.000 | [VDC] |
| $R_U$ = | 19.98 | 16.65 | 13.83 | 11.42 | 9.32 | 7.49 | 5.87 | 4.43 | 3.15 | 1.99 | [kΩ] |

| Trim down | 1 | 2 | 3 | 4 | 5 | 6 | 7 | 8 | 9 | 10 | [%] |
|---|---|---|---|---|---|---|---|---|---|---|---|
| Vout = | 14.85 | 14.70 | 14.55 | 14.40 | 14.25 | 14.1 | 13.95 | 13.8 | 13.65 | 13.5 | [VDC] |
| $R_D$ = | 284.89 | 128.68 | 76.61 | 50.58 | 34.96 | 24.55 | 17.11 | 11.53 | 7.19 | 3.72 | [kΩ] |

continued on next page

## Specifications (measured @ Ta= 25°C, nom. Vin, full load unless otherwise stated)

| RP40-xx24SFR | | | | | | | | | | | |
|---|---|---|---|---|---|---|---|---|---|---|---|
| Trim up | 1 | 2 | 3 | 4 | 5 | 6 | 7 | 8 | 9 | 10 | [%] |
| Vout = | 24.240 | 24.480 | 24.720 | 24.960 | 25.200 | 25.440 | 25.680 | 25.920 | 26.160 | 26.400 | [VDC] |
| $R_U$ = | 1275.2 | 606.60 | 383.73 | 272.30 | 205.44 | 160.87 | 129.03 | 105.15 | 86.58 | 71.72 | [kΩ] |
| | | | | | | | | | | | |
| Trim up | 11 | 12 | 13 | 14 | 15 | 16 | 17 | 18 | 19 | 20 | [%] |
| Vout = | 26.640 | 26.880 | 27.120 | 27.360 | 27.600 | 27.840 | 28.080 | 28.320 | 28.560 | 28.800 | [VDC] |
| $R_U$ = | 59.56 | 49.43 | 40.86 | 33.51 | 27.15 | 21.57 | 16.66 | 12.29 | 8.38 | 4.86 | [kΩ] |
| | | | | | | | | | | | |
| Trim down | 1 | 2 | 3 | 4 | 5 | 6 | 7 | 8 | 9 | 10 | [%] |
| Vout = | 23.760 | 23.520 | 23.280 | 23.040 | 22.800 | 22.560 | 22.320 | 22.080 | 21.840 | 21.600 | [VDC] |
| $R_D$ = | 838.15 | 376.78 | 222.98 | 146.09 | 99.95 | 69.19 | 47.22 | 30.74 | 17.93 | 7.68 | [kΩ] |

## REGULATIONS

| Parameter | Condition | | Value |
|---|---|---|---|
| Output Accuracy | | | ±1.0% |
| Line Regulation | low line to high line, full load | | ±0.2% |
| Load Regulation | 0% to 100% load | Single<br>Dual | ±0.5%<br>±1.0% |
| Cross Regulation | asymmetrical 25%<>100% load | | ±5.0% |
| Transient Response Recovery Time | 25% load step change | | 250µs typ. |

## PROTECTIONS

| Parameter | Condition | | Value |
|---|---|---|---|
| Short Circuit Protection (SCP) | | | continuous, automatic recovery |
| Over Voltage Protection (OVP) | zener diode clamp | 3.3Vout<br>5Vout<br>12Vout<br>15Vout<br>24Vout | 3.9VDC<br>6.2VDC<br>15VDC<br>20VDC<br>30VDC |
| Over Load Protection (OLP) | % Iout rated | | 150% typ., Hiccup mode |
| Over Temperature Protection (OTP) | | | 115°C typ. |
| Isolation Voltage (6) | nom. Vin = 24, 48VDC | I/P to O/P<br>I/P to O/P to Case | 1.6kVDC/1min.<br>1.6kVDC/1min. |
| | nom. Vin = 110VDC | I/P to O/P<br>I/P to O/P to Case | 3kVDC/1min.<br>1.6kVDC/1min. |
| Isolation Resistance | Viso= 500VDC | | 1GΩ min. |
| Isolation Capacitance | | | 1500pF max. |

**Notes:**

Note6: For repeat Hi-Pot testing, reduce the time and/or the test voltage

Note7: Refer to local safety regulations if input over-current protection is also required. Recommended fuse: slow blow type

## Specifications (measured @ Ta= 25°C, nom. Vin, full load unless otherwise stated)

| ENVIRONMENTAL | | | |
|---|---|---|---|
| **Parameter** | **Condition** | | **Value** |
| Operating Temperature Range | without derating<br>with derating | | -40°C to +60°C<br>-40°C to +105°C |
| Maximum Case Temperature | | | +105°C |
| Temperature Coefficient | | | ±0.02%/K max. |
| Thermal Impedance | @ natural convection 0.1m/s | without heat-sink<br>with heat-sink | 10.8K/W<br>10.3K/W |
| Operating Humidity | non-condensing | | 5% - 95% RH |
| Environmental testing Part 2-1: Tests<br>Test A: Cold | Storage temperature -40°C, 16 hours<br>Operating temperature -40°C, 2 hours | | according to EN60068-2-1:2007 |
| Environmental testing Part 2-2: Tests<br>Test B: Dry heat | Temperature +85°C, 6 hours | | according to EN60068-2-2:2007 |
| Environmental testing Part 2-30: Tests<br>Test Db: Damp heat, cyclic (12 h + 12 h cycle) | Temperature: +25 to +55°C<br>Humidity: 90%+/-5% RH<br>Test Duration: 48 hours | | according to EN60068-2-30:2005 |
| Railway applications – Rolling stock equipment – Shock and vibration tests | Random vibration test 5Hz to 150Hz, Z-Axis 1.01m/s² (0.103Grms), Y-Axis, X-Axis 0.70m/s² (0.0714Grms), Duration 10min/Axis | | according to EN61373:2010 |
| Fire protection on railway vehicles | | | according to EN45545-2:2013 |
| Fire hazard testing Part 2-11: Glowing/hot-wire based test methods – Glow-wire flammability test method for end-products | Oxygen index test | | according to EN ISO 4589-2 OI |
| Fire hazard testing Part 11-10: Test flames – 50 W horizontal and vertical flame test methods | Glow-wire test | | according to EN60695-2-11 |
| Shock | | | according to MIL-STD-810F |
| Thermal Shock | | | according to MIL-STD-810F |
| Vibration | | | according to MIL-STD-810F |
| MTBF | according to MIL-HDBK-217F, G.B | | 907.3 x $10^3$ hours |

### Derating Graph [8]

(@ Chamber and natural convection 0.1m/s)

RP40-2415SFR

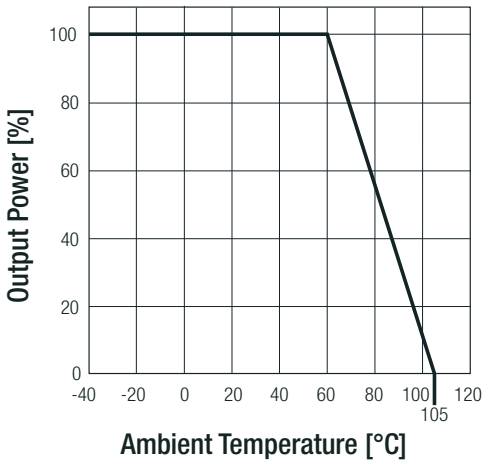


RP40-2415SFR-HC

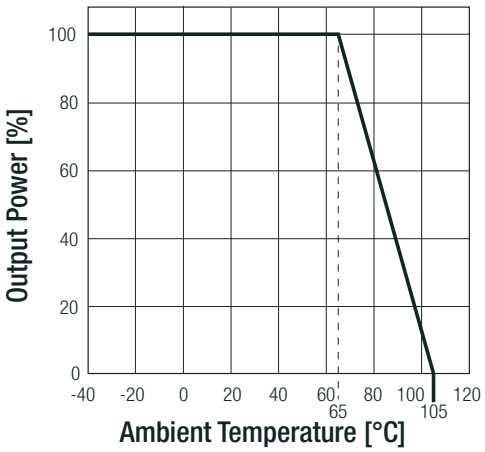


**Notes:**

Note8: Derating graphs are valid only for the shown part numbers. If you need detailed derating-information about a part-number not shown here please contact RECOM Techsupport for detailed information

## Specifications (measured @ Ta= 25°C, nom. Vin, full load unless otherwise stated)

| SAFETY AND CERTIFICATIONS | | |
|---|---|---|
| **Certificate Type (Safety)** | **Condition** | **Standard** |
| Information Technology Equipment, General Requirements for Safety | E196683 | UL60950-1, 2nd Edition, 2014<br>CAN/CSA-C22.2 No. 60950-1-07, 2nd Edition, 2014 |
| Information Technology Equipment, General Requirements for Safety (LVD) | TW1708011-001 | IEC60950-1:2005, 2nd Edition + A2:2013<br>EN60950-1:2006 + A2:2013 |
| Railway Applications - Electrical Equipment used on rolling stock | 15A100702E-C | EN50155:2007 |
| EAC | RU-AT.49.09571 | TP TC 004/2011 |
| RoHS2 | | RoHS-2011/65/EU + AM-2015/863 |
| | | |
| **EMC Compliance (Railway)** | **Condition** | **Standard / Criterion** |
| Railway Applications - Electromagnetic Compatibility | ***"refer to EMC filtering"*** | EN50121-3-2:2006 |
| Industrial, Scientific and Medical Equipment – Radio Frequency Disturbance Characteristics – Limits and Methods of Measurement | | EN55011 |
| ESD Electrostatic Discharge Immunity Test | Air ±2, ±4, ±8kV<br>Contact ±2, ±4, ±6kV | EN61000-4-2, Criteria A |
| Radiated, Radio-Frequency, Electromagnetic Field Immunity Test | 20V/m (80-1000MHz) | EN61000-4-3, Criteria A |
| Fast Transient and Burst Immunity (9) | DC Power Port: ±2kV | EN61000-4-4, Criteria A |
| Surge Immunity (9) | DC Power Port: L-L ±0.5, 1kV<br>DC Power Port: L-E ±0.5, 1, 2kV | EN61000-4-5, Criteria A |
| Immunity to Conducted Disturbances, Induced by Radio-Frequency Fields | DC Power Port: 10V | EN61000-4-6, Criteria A |
| | | |
| **EMC Compliance (Multimedia)** | **Condition** | **Standard / Criterion** |
| Electromagnetic Compatibility of Multimedia Equipment - Emission Requirements | with external filter<br>***"refer to EMC filtering"*** | EN55032, Class A and B |
| Information Technology Equipment - Immunity Characteristics - Limits and Methods of Measurement | | EN55024:2010 + A1:2015 |
| ESD Electrostatic Discharge Immunity Test | Air ±2, ±4, ±8kV<br>Contact ±2, ±4, ±6kV | IEC61000-4-2:2008, Criteria A |
| Radiated, Radio-Frequency, Electromagnetic Field Immunity Test | 20V/m (80-1000MHz) | IEC61000-4-3:2006 + A2:2010, Criteria A |
| Fast Transient and Burst Immunity | DC Power Port: ±2kV | IEC61000-4-4:2012, Criteria A |
| Surge Immunity | DC Power Port: ±0.5, ±1, ±2kV | IEC61000-4-5:2014, Criteria A |
| Immunity to Conducted Disturbances, Induced by Radio-Frequency Fields | DC Power Port: 10V | IEC61000-4-6:2013, Criteria A |
| Power Magnetic Field Immunity | 50Hz 100A/m, 1000A/m | IEC61000-4-8:2009, Criteria A |

**Notes:**

Note9: An external input filter capacitor is required if the module has to meet EN61000-4-4 and -4-5.

**The RP40-24xxFR** requires an aluminum electrolytic capacitor (Nippon chemi-con KY series, 220µF/100V) and a TVS (SMDJ58A, 58V, 3000Watt peak pulse power) connected in parallel.

**The RP40-48xxFR** requires an aluminum electrolytic capacitor (Nippon chemi-con KY series, 220µF/100V) and a TVS (SMDJ120A,120V, 3000Watt peak pulse power) connected in parallel.

**The RP40-110xxFR** requires 3pcs aluminum electrolytic capacitor in parallel (Ruby-con BXF series, 68µF/200V) and two TVS (SMDJ90A, 90V, 3000Watt peak pulse power) in series, connected in parallel.

**continued on next page**

## Specifications (measured @ Ta= 25°C, nom. Vin, full load unless otherwise stated)

EMC Filtering according to EN50121-3-2 (Single Outputs)

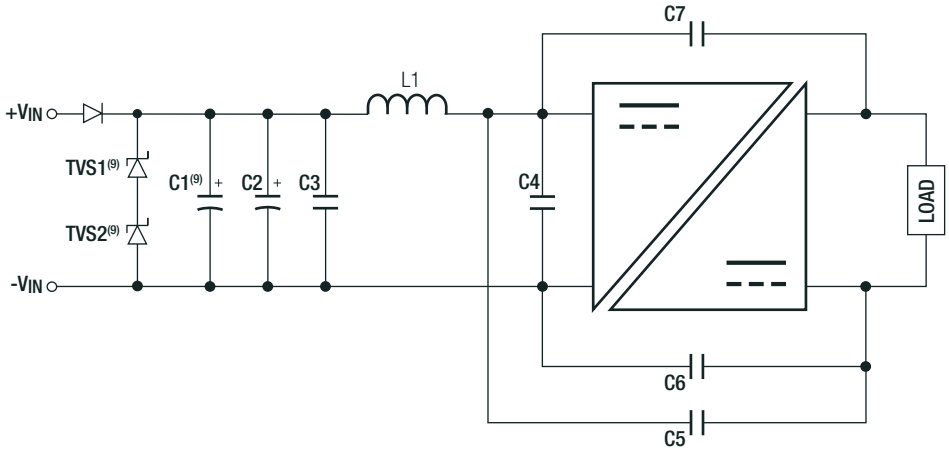


EMC Filtering according to EN50121-3-2 (Dual Outputs)

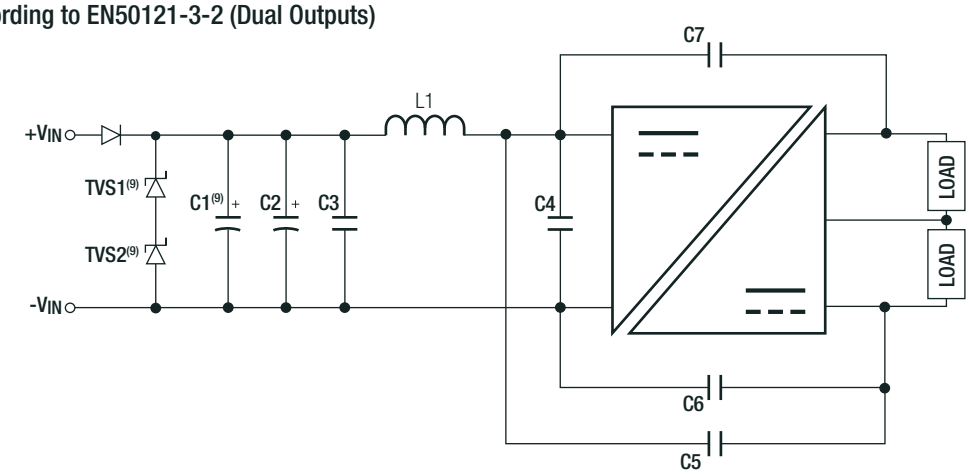


Component List

| MODEL | TVS1 | TVS2 | C1(9) | C2 | C3 | C4 | C5, C6, C7 | L1 |
|---|---|---|---|---|---|---|---|---|
| RP40-24xxS_DFR | SMDJ58A 58V, 3000W peak pulse power | N/A | 220µF/100V | N/A | N/A | 10µF/50V 1210 MLCC | 680pF/3kV 1808 MLCC | 2.2µH 11A SMD-Inductor |
| RP40-48xxS_DFR | SMDJ120A 120V, 3000W peak pulse power | | | | | 4.7µF/100V 1210 MLCC | | 12µH 4A SMD-Inductor |
| RP40-110xxS_DFR | SMDJ90A 90V, 3000W peak pulse power | SMDJ90A 90V, 3000W peak pulse power | 68µF/200V 3 in parallel | 33µF/250V Al Cap. (lie down) Chemi-con KXJ | 1µF/250V 1812 MLCC | 1µF/250V 1812 MLCC | 1000pF TDK CD series Y1 | 22µH 1.5A SMD-Inductor |

continued on next page

## Specifications (measured @ Ta= 25°C, nom. Vin, full load unless otherwise stated)

### EMC Filtering according to EN55032 Class A (Single Outputs)

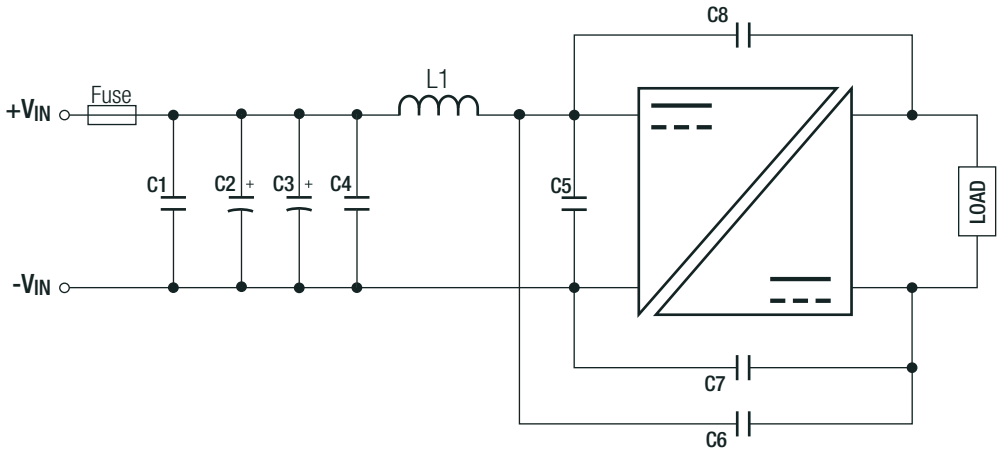


### EMC Filtering according to EN55032 Class A (Dual Outputs)

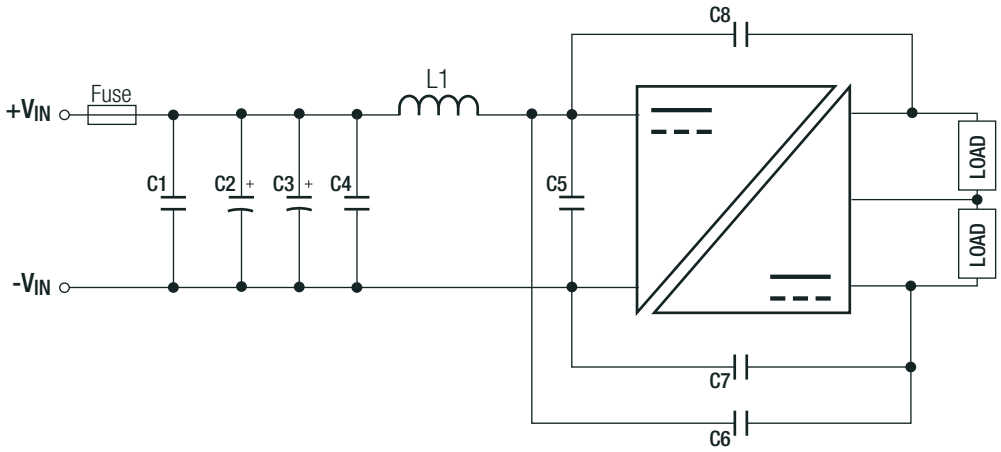


### Component List

| MODEL | C1 | C2 | C3 | C4 | C5 | C6 | C7 | C8 | L1 |
|---|---|---|---|---|---|---|---|---|---|
| RP40-24xxS_DFR | 10µF/50V 1210 MLCC | N/A | N/A | N/A | 10µF/50V 1210 MLCC | 680pF/3kV 1808 MLCC | | | 2.2µH 11A SMD Inductor |
| RP40-48xxS_DFR | 4.7µF/100V 1210 MLCC | | | | 4.7µF/100V 1210 MLCC | | | | 12µH 4A SMD Inductor |
| RP40-110xxS_DFR | N/A | 33µF/250V Al Cap. (lie down) Chemi-con KXJ | | 1µF/250V 1812 MLCC | | 1000pF TDK CD series Y1 | | | 22µH 1.5A SMD Inductor |

continued on next page

## Specifications (measured @ Ta= 25°C, nom. Vin, full load unless otherwise stated)

EMC Filtering according to EN55032 Class B (24Vin and 48Vin, Single Outputs)

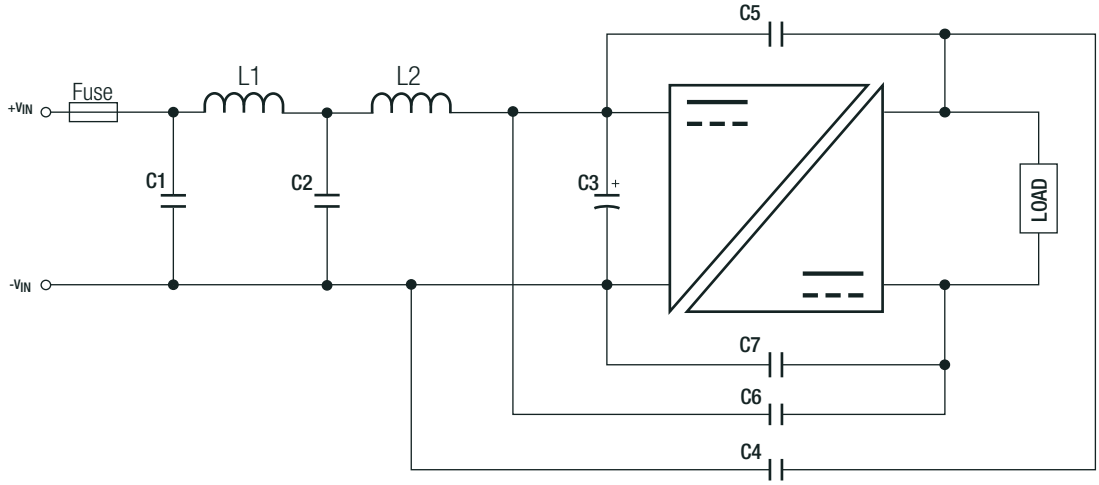


EMC Filtering according to EN55032 Class B (24Vin and 48Vin, Dual Outputs)

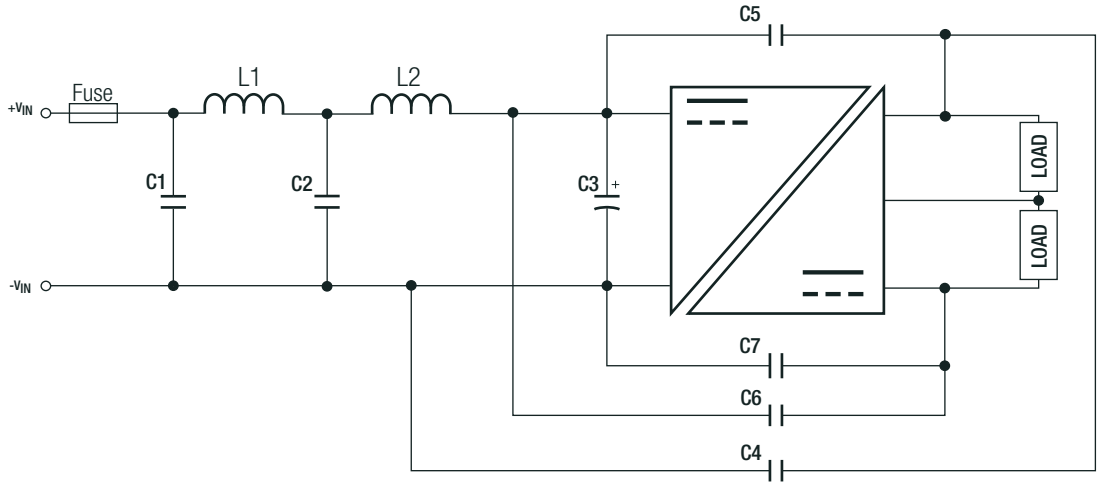


Component List

| MODEL | C1/C2 | C3 | C4/C6 | C5/C7 | L1/L2 |
|---|---|---|---|---|---|
| RP40-24xxS_DFR | 10µF/50V<br>1210 MLCC | 82µF/100V<br>Al Cap. (lie down)<br>Chemi-con KJ | 1000pf/3kV<br>1808 MLCC | 2200pf/3kV<br>1808 MLCC | 3.3µH 10A<br>SMD Inductor |
| RP40-48xxS_DFR | 4.7µF/100V<br>1210 MLCC | | | | 12µH 4A<br>SMD Inductor |

continued on next page

## Specifications (measured @ Ta= 25°C, nom. Vin, full load unless otherwise stated)

### EMC Filtering according to EN55032 Class B (110Vin Single Outputs)

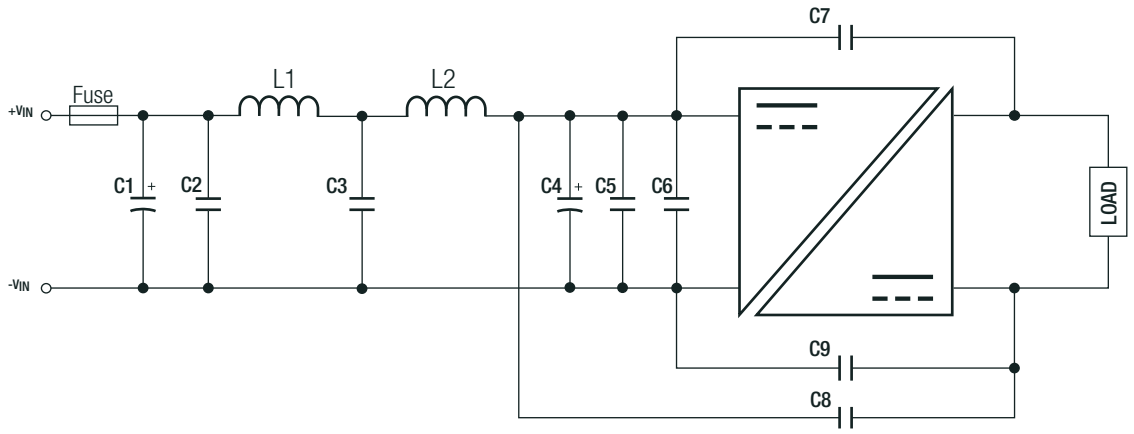


### EMC Filtering according to EN55032 Class B (110Vin Dual Outputs)

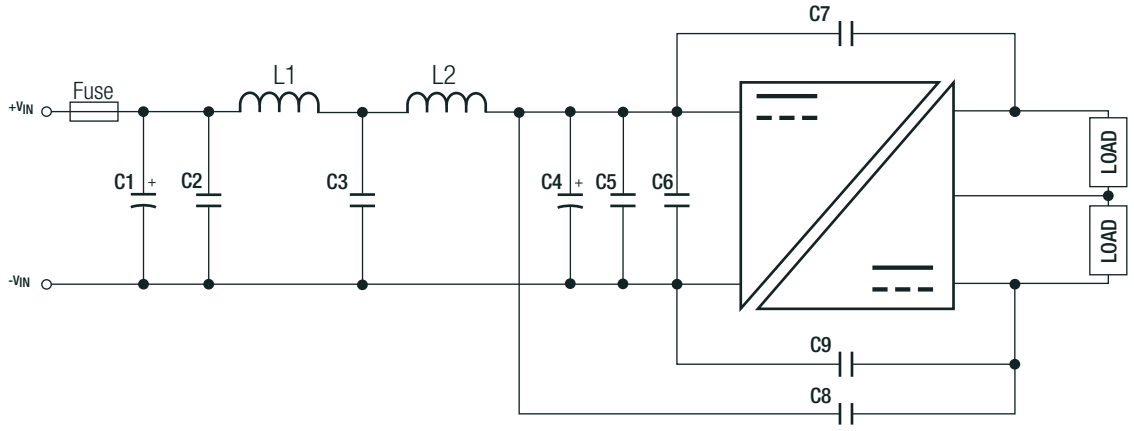


Component List

| MODEL | C1 | C2/C3 | C4 | C5/C6 | C7/C8/C9 | L1/L2 |
|---|---|---|---|---|---|---|
| RP40-110xxS_DFR | 33µF/250V<br>Al Cap. (lie down)<br>Chemicon -KXJ | 1µF/250V<br>1812 MLCC | 33µF/250V<br>Al Cap. (lie down)<br>Chemicon -KXJ | 1µF/250V<br>1812 MLCC | 2200pF<br>TDK CD series Y1 | 22µH 1.5A<br>SMD Inductor |

### DIMENSIONS and PHYSICAL CHARACTERISTICS

| Parameter | Type | Value |
|---|---|---|
| Material | case<br>base<br>potting | copper alloy (CuZn33)<br>FR4 PCB<br>silicone (UL94 V-0) |
| Dimensions (LxWxH) | without Heat-sink<br>with Heat-sink | 50.8 x 25.4 x 10.2mm<br>56.8 x 25.4 x 16.8mm |
| Weight | without Heat-sink<br>with Heat-sink | 32g<br>43g |

continued on next page

## Specifications (measured @ Ta= 25°C, nom. Vin, full load unless otherwise stated)

### Dimension Drawing (mm)

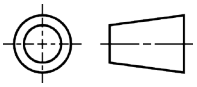

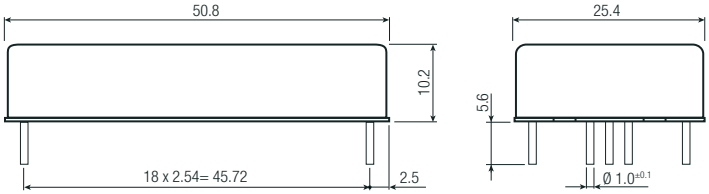


### Pinning Information

| Pin # | Single | Dual |
|---|---|---|
| 1 | +Vin | +Vin |
| 2 | -Vin | -Vin |
| 3 | CTRL (3) | CTRL (3) |
| 4 | +Vout | +Vout |
| 5 | -Vout | Com |
| 6 | Trim | -Vout |

Tolerance: xx.x= ±0.5mm
xx.xx= ±0.25mm

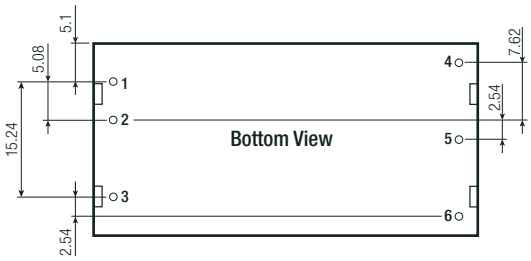


### Recommended Footprint Details

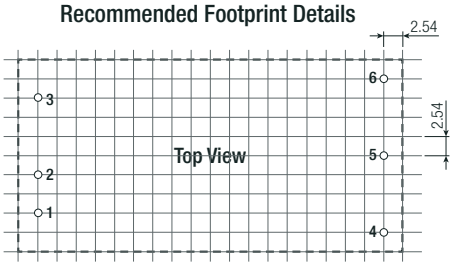


### Dimension Drawing with Heat-sink (mm)

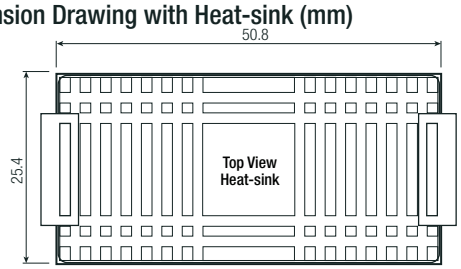


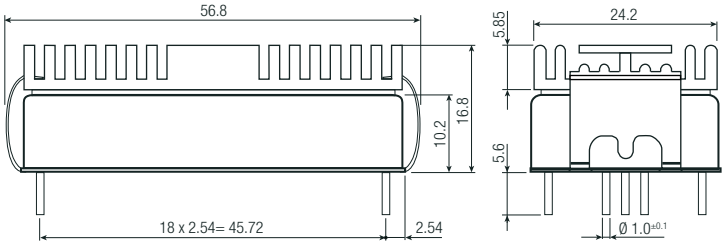


## PACKAGING INFORMATION

| Parameter | Type | | Value |
|---|---|---|---|
| Packaging Dimension (LxWxH) | tube<br>tray | without heat-sink<br>with heat-sink | 255.0 x 54.0 x 22.0mm<br>302.5 x 222.0 x 20.0mm |
| Packaging Quantity | tube<br>tray | without heat-sink<br>with heat-sink | 9pcs<br>20pcs |
| Storage Temperature Range | | | -55°C to +125°C |
| Storage Humidity | non-condensing | | 5% - 95% RH |

The product information and specifications may be subject to changes even without prior written notice.The product has been designed for various applications; its suitability lies in the responsibility of each customer. The products are not authorized for use in safety-critical applications without RECOM's explicit written consent. A safety-critical application is an application where a failure may reasonably be expected to endanger or cause loss of life, inflict bodily harm or damage property. The applicant shall indemnify and hold harmless RECOM, its affiliated companies and its representatives against any damage claims in connection with the unauthorized use of RECOM products in such safety-critical applications.

Компания «ЭлектроПласт» предлагает заключение долгосрочных отношений при поставках импортных электронных компонентов на взаимовыгодных условиях!

Наши преимущества:

- Оперативные поставки широкого спектра электронных компонентов отечественного и импортного производства напрямую от производителей и с крупнейших мировых складов;
- Поставка более 17-ти миллионов наименований электронных компонентов;
- Поставка сложных, дефицитных, либо снятых с производства позиций;
- Оперативные сроки поставки под заказ (от 5 рабочих дней);
- Экспресс доставка в любую точку России;
- Техническая поддержка проекта, помощь в подборе аналогов, поставка прототипов;
- Система менеджмента качества сертифицирована по Международному стандарту ISO 9001;
- Лицензия ФСБ на осуществление работ с использованием сведений, составляющих государственную тайну;
- Поставка специализированных компонентов (Xilinx, Altera, Analog Devices, Intersil, Interpoint, Microsemi, Aeroflex, Peregrine, Syfer, Eurofarad, Texas Instrument, Miteq, Cobham, E2V, MA-COM, Hittite, Mini-Circuits,General Dynamics и др.);

Помимо этого, одним из направлений компании «ЭлектроПласт» является направление «Источники питания». Мы предлагаем Вам помощь Конструкторского отдела:

- Подбор оптимального решения, техническое обоснование при выборе компонента;
- Подбор аналогов;
- Консультации по применению компонента;
- Поставка образцов и прототипов;
- Техническая поддержка проекта;
- Защита от снятия компонента с производства.

**Как с нами связаться**

**Телефон:** 8 (812) 309 58 32 (многоканальный)
**Факс:** 8 (812) 320-02-42
**Электронная почта:** org@eplast1.ru
**Адрес:** 198099, г. Санкт-Петербург, ул. Калинина, дом 2, корпус 4, литера А.