Features

Regulated Converter

- Wide 4:1 input voltage range
- 1.6kVDC isolation for 24Vin and 48Vin, 3kVDC isolation for 110Vin
- Efficiency up to 92%
- Six-sided continuous shield
- EN50155, UL/IEC/EN60950-1 certified

RECOM
DC/DC Converter

RP40-FR

40 Watt 2“ x 1“ Single and Dual Output

YEAR 3 warranty

c UL us E196683

CE

EN50155 certified
UL60950-1 certified
IEC/EN60950-1 certified
EN55032 compliant
EN55024 compliant
EN50121-3-2 compliant

REF DESIGN available

www.recom-power.com/eval-ref-boards

SURGE PROTECTOR available

https://www.recom-power.com/pdf/Powerline_DC-DC/RSPxxx-168.pdf

Description

The RP40-FR series wide range input DC/DC converters have been especially designed for railway applications and are EN50155 certified. They are also certified to UL60950-1 and cUL 60950-1, this makes them ideal for all high input voltage telecom and industrial applications where approved safety standards are required.

Selection Guide

Part Number	Input Voltage Range [VDC]	Output Voltage [VDC]	Output Current [mA]	Input (1) Current [mA]	Efficiency (1) typ. [%]	Max. Capacitive Load (2) [µF]
RP40-243.3SFR (3,4)	9-36	3.3	10000	1528	90	26600
RP40-2405SFR (3,4)	9-36	5	8000	1832	91	20000
RP40-2412SFR (3,4)	9-36	12	3333	1811	92	3900
RP40-2415SFR (3,4)	9-36	15	2666	1811	92	2600
RP40-2424SFR (3,4)	9-36	24	1666	1831	91	1300
RP40-483.3SFR (3,4)	18-75	3.3	10000	764	90	26600
RP40-4805SFR (3,4)	18-75	5	8000	916	91	20000
RP40-4812SFR (3,4)	18-75	12	3333	906	92	3900
RP40-4815SFR (3,4)	18-75	15	2666	906	92	2600
RP40-4824SFR (3,4)	18-75	24	1666	915	91	1300
RP40-1103.3SFR (3,4)	43-160	3.3	10000	341	88	26600
RP40-11005SFR (3,4)	43-160	5	8000	409	89	20000
RP40-11012SFR (3,4)	43-160	12	3333	402	90.5	3900
RP40-11015SFR (3,4)	43-160	15	2666	400	91	2600
RP40-11024SFR (3,4)	43-160	24	1666	404	90	1300
RP40-2412DFR (3,4)	9-36	±12	±1666	1851	90	±2600
RP40-2415DFR (3,4)	9-36	±15	±1333	1851	90	±1600
RP40-2424DFR (3,4)	9-36	±24	±833	1830	91	±650
RP40-4812DFR (3,4)	18-75	±12	±1666	925	90	±2600
RP40-4815DFR (3,4)	18-75	±15	±1333	741	90	±1600
RP40-4824DFR (3,4)	18-75	±24	±833	572	91	±650
RP40-11012DFR (3,4)	43-160	±12	±1666	408	89	±2600
RP40-11015DFR (3,4)	43-160	±15	±1333	408	89	±1600
RP40-11024DFR (3,4)	43-160	±24	±833	400	91	±650

Notes:

Note1: Maximum values at nominal input voltage and full load at +25°C ambient
Note2: Max. Cap load is tested at minimum input and constant resistive load

Model Numbering

RP40-__ __ _FR/ _ -__

- nom. Input Voltage
- nom. Output Voltage
- Single or Dual
- *“Package (4)”*
- *“CTRL Logic (3)”*

Notes:

Note3: standard part is with suffix “P” for positive logic (1=ON, 0=OFF) or add suffix “N” instead for negative logic (0=ON, 1=OFF)
Note4: add suffix “-HC” for premounted Heat-sink with clips

Ordering Examples

RP40-2405SFR/P = 24V input, 5V output, single, positive Logic CTRL pin
RP40-4812DFR/N-HC = 48V input, ±12V output, dual, negative Logic CTRL pin, Heat-sink premounted

Specifications (measured @ Ta= 25°C, nom. Vin, full load unless otherwise stated)

BASIC CHARACTERISTICS

Parameter	Condition		Min.	Typ.	Max.
Input Filter					Pi-Type
Input Voltage Range	nom. Vin = 24VDC nom. Vin = 48VDC nom. Vin = 110VDC		9VDC 18VDC 43VDC	24VDC 48VDC 110VDC	36VDC 75VDC 160VDC
Input Surge Voltage	1s max.	nom. Vin = 24VDC nom. Vin = 48VDC nom. Vin = 110VDC			50VDC 100VDC 170VDC
Under Voltage Lockout (UVLO)	nom. Vin = 24VDC	DC-DC ON DC-DC OFF		8VDC	9VDC
	nom. Vin = 48VDC	DC-DC ON DC-DC OFF		16VDC	18VDC
	nom. Vin = 110VDC	DC-DC ON DC-DC OFF		40VDC	43VDC
Output Voltage Trimming	refer to ***„OUTPUT VOLTAGE TRIMMING“***	3.3Vout, 5Vout, 12Vout 15Vout, 24Vout	-10% -10%		+10% +20%
Input Reflected Ripple Current				30mAp-p	
Start-up Time	Power up ON/OFF CTRL			60ms 60ms	
ON/OFF CTRL (5)	Positive Logic	DC-DC ON DC-DC OFF	Open or 3.0VDC < V_{CTRL}< 12VDC Short or 0VDC < V_{CTRL}< 1.2VDC		
	Negative Logic	DC-DC ON DC-DC OFF	Short or 0VDC < V_{CTRL}< 1.2VDC Open or 3.0VDC < V_{CTRL}< 12VDC		
Input Current of CTRL pin	DC-DC ON		-0.5mA		+0.5mA
Standby Current	DC-DC OFF			3mA	
Internal Operating Frequency			225kHz	250kHz	275kHz
Ripple and Noise	measured by 20MHz bandwidth with a 1µF/50V X7R MLCC	3.3Vout, 5Vout 12Vout, 15Vout 24Vout		75mVp-p 100mVp-p 150mVp-p	100mVp-p 125mVp-p 200mVp-p

Notes:

Note5: The ON/OFF control function can be positive or negative logic. The pin voltage is referenced to -Vin pin

RP40-2405SFR

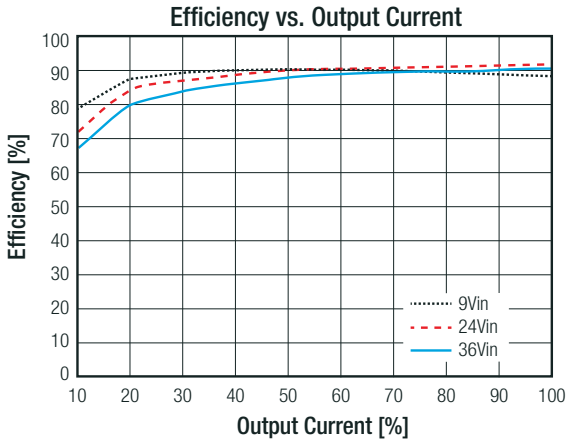

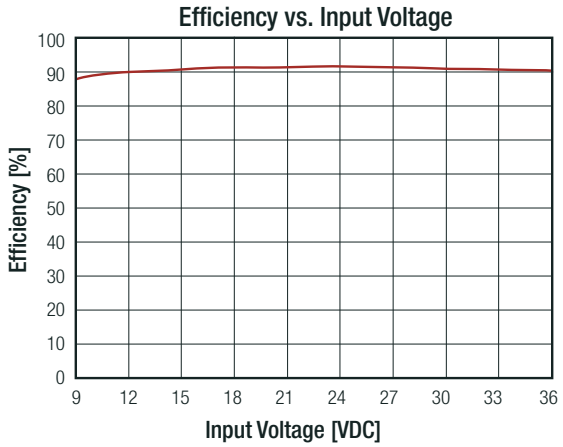

continued on next page

Specifications (measured @ Ta= 25°C, nom. Vin, full load unless otherwise stated)

RP40-4805SFR

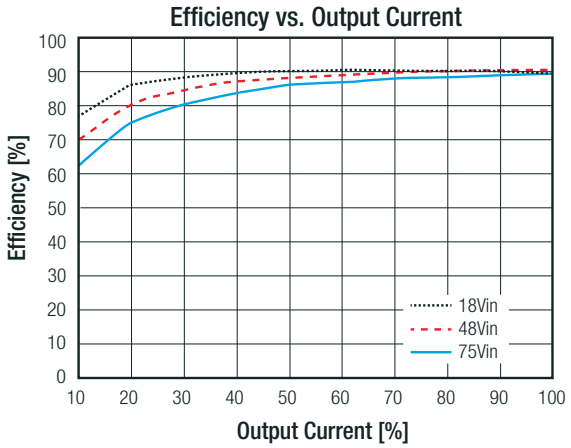

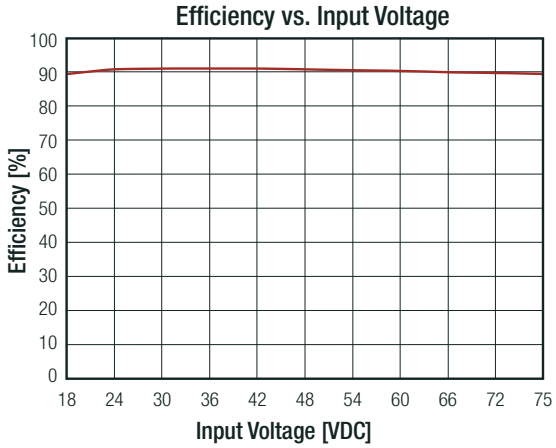

RP40-11005SFR

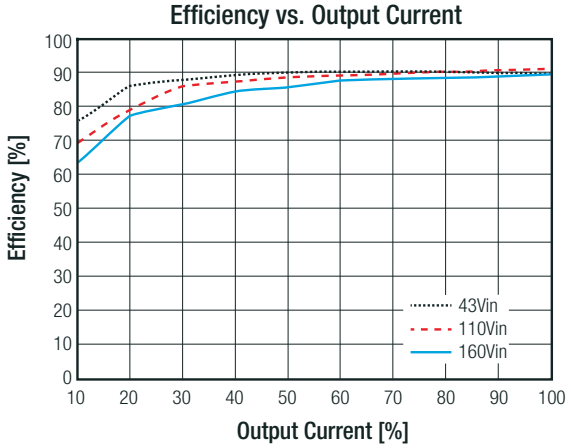

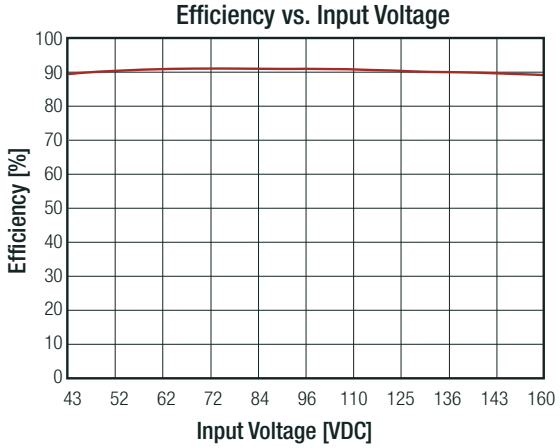

OUTPUT VOLTAGE TRIMMING

Output Voltage Trimming

Single output Powerline converters offer the feature of trimming the output voltage over a certain range around the nominal value by using external trim resistors. No general equation can be given for calculating the trim resistors, but the following trimtables give typical values for chosing these trimming resistors. If voltages between the given trim points are required, extrapolate between the two nearest given values to work out the resistor required or use a variable resistor to set the output voltage. Output can be externally trimmed by using the method shown below.

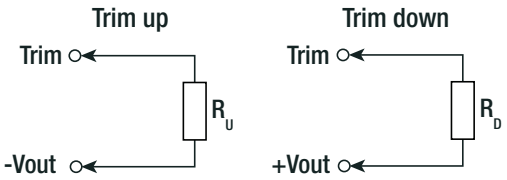

continued on next page

Specifications (measured @ Ta= 25°C, nom. Vin, full load unless otherwise stated)

RP40-xx3.3SFR

Trim up	1	2	3	4	5	6	7	8	9	10	[%]
Vout =	3.333	3.366	3.399	3.432	3.465	3.498	3.531	3.564	3.597	3.63	[VDC]
R_U =	57.93	26.16	15.58	10.28	7.11	4.99	3.48	2.34	1.46	0.75	[kΩ]

Trim down	1	2	3	4	5	6	7	8	9	10	[%]
Vout =	3.267	3.234	3.201	3.168	3.135	3.102	3.069	3.036	3.003	2.97	[VDC]
R_D =	69.47	31.23	18.49	12.12	8.29	5.74	3.92	2.56	1.50	0.65	[kΩ]

RP40-xx05SFR

Trim up	1	2	3	4	5	6	7	8	9	10	[%]
Vout =	5.05	5.10	5.15	5.20	5.25	5.30	5.35	5.4	5.45	5.50	[VDC]
R_U =	36.57	16.58	9.92	6.89	4.59	3.25	2.30	1.59	1.03	0.59	[kΩ]

Trim down	1	2	3	4	5	6	7	8	9	10	[%]
Vout =	4.95	4.90	4.85	4.80	4.75	4.70	4.65	4.60	4.55	4.50	[VDC]
R_D =	45.533	20.612	12.306	8.152	5.66	3.999	2.812	1.922	1.23	0.676	[kΩ]

RP40-xx12SFR

Trim up	1	2	3	4	5	6	7	8	9	10	[%]
Vout =	12.12	12.24	12.36	12.48	12.60	12.72	12.84	12.96	13.08	13.20	[VDC]
R_U =	367.91	165.95	98.636	64.977	44.782	31.318	21.701	14.488	8.879	4.391	[kΩ]

Trim down	1	2	3	4	5	6	7	8	9	10	[%]
Vout =	11.88	11.76	11.64	11.52	11.40	11.28	11.16	11.04	10.92	10.8	[VDC]
R_D =	460.99	207.95	123.6	81.423	56.118	39.249	27.199	18.162	11.132	5.509	[kΩ]

RP40-xx15SFR

Trim up	1	2	3	4	5	6	7	8	9	10	[%]
Vout =	15.15	15.3	15.45	15.60	15.75	15.90	16.05	16.20	16.35	16.50	[VDC]
R_U =	419.81	199.91	126.60	89.95	67.96	53.30	42.83	34.98	28.87	23.98	[kΩ]

Trim up	11	12	13	14	15	16	17	18	19	20	[%]
Vout =	16.650	16.800	16.950	17.100	17.250	17.400	17.550	17.700	17.850	18.000	[VDC]
R_U =	19.98	16.65	13.83	11.42	9.32	7.49	5.87	4.43	3.15	1.99	[kΩ]

Trim down	1	2	3	4	5	6	7	8	9	10	[%]
Vout =	14.85	14.70	14.55	14.40	14.25	14.1	13.95	13.8	13.65	13.5	[VDC]
R_D =	284.89	128.68	76.61	50.58	34.96	24.55	17.11	11.53	7.19	3.72	[kΩ]

continued on next page

Specifications (measured @ Ta= 25°C, nom. Vin, full load unless otherwise stated)

RP40-xx24SFR											
Trim up	1	2	3	4	5	6	7	8	9	10	[%]
Vout =	24.240	24.480	24.720	24.960	25.200	25.440	25.680	25.920	26.160	26.400	[VDC]
R_U =	1275.2	606.60	383.73	272.30	205.44	160.87	129.03	105.15	86.58	71.72	[kΩ]
Trim up	11	12	13	14	15	16	17	18	19	20	[%]
Vout =	26.640	26.880	27.120	27.360	27.600	27.840	28.080	28.320	28.560	28.800	[VDC]
R_U =	59.56	49.43	40.86	33.51	27.15	21.57	16.66	12.29	8.38	4.86	[kΩ]
Trim down	1	2	3	4	5	6	7	8	9	10	[%]
Vout =	23.760	23.520	23.280	23.040	22.800	22.560	22.320	22.080	21.840	21.600	[VDC]
R_D =	838.15	376.78	222.98	146.09	99.95	69.19	47.22	30.74	17.93	7.68	[kΩ]

REGULATIONS

Parameter	Condition		Value
Output Accuracy			±1.0%
Line Regulation	low line to high line, full load		±0.2%
Load Regulation	0% to 100% load	Single Dual	±0.5% ±1.0%
Cross Regulation	asymmetrical 25%<>100% load		±5.0%
Transient Response Recovery Time	25% load step change		250µs typ.

PROTECTIONS

Parameter	Condition		Value
Short Circuit Protection (SCP)			continuous, automatic recovery
Over Voltage Protection (OVP)	zener diode clamp	3.3Vout 5Vout 12Vout 15Vout 24Vout	3.9VDC 6.2VDC 15VDC 20VDC 30VDC
Over Load Protection (OLP)	% Iout rated		150% typ., Hiccup mode
Over Temperature Protection (OTP)			115°C typ.
Isolation Voltage (6)	nom. Vin = 24, 48VDC	I/P to O/P I/P to O/P to Case	1.6kVDC/1min. 1.6kVDC/1min.
	nom. Vin = 110VDC	I/P to O/P I/P to O/P to Case	3kVDC/1min. 1.6kVDC/1min.
Isolation Resistance	Viso= 500VDC		1GΩ min.
Isolation Capacitance			1500pF max.

Notes:

Note6: For repeat Hi-Pot testing, reduce the time and/or the test voltage

Note7: Refer to local safety regulations if input over-current protection is also required. Recommended fuse: slow blow type

Specifications (measured @ Ta= 25°C, nom. Vin, full load unless otherwise stated)

ENVIRONMENTAL			
Parameter	**Condition**		**Value**
Operating Temperature Range	without derating with derating		-40°C to +60°C -40°C to +105°C
Maximum Case Temperature			+105°C
Temperature Coefficient			±0.02%/K max.
Thermal Impedance	@ natural convection 0.1m/s	without heat-sink with heat-sink	10.8K/W 10.3K/W
Operating Humidity	non-condensing		5% - 95% RH
Environmental testing Part 2-1: Tests Test A: Cold	Storage temperature -40°C, 16 hours Operating temperature -40°C, 2 hours		according to EN60068-2-1:2007
Environmental testing Part 2-2: Tests Test B: Dry heat	Temperature +85°C, 6 hours		according to EN60068-2-2:2007
Environmental testing Part 2-30: Tests Test Db: Damp heat, cyclic (12 h + 12 h cycle)	Temperature: +25 to +55°C Humidity: 90%+/-5% RH Test Duration: 48 hours		according to EN60068-2-30:2005
Railway applications – Rolling stock equipment – Shock and vibration tests	Random vibration test 5Hz to 150Hz, Z-Axis 1.01m/s² (0.103Grms), Y-Axis, X-Axis 0.70m/s² (0.0714Grms), Duration 10min/Axis		according to EN61373:2010
Fire protection on railway vehicles			according to EN45545-2:2013
Fire hazard testing Part 2-11: Glowing/hot-wire based test methods – Glow-wire flammability test method for end-products	Oxygen index test		according to EN ISO 4589-2 OI
Fire hazard testing Part 11-10: Test flames – 50 W horizontal and vertical flame test methods	Glow-wire test		according to EN60695-2-11
Shock			according to MIL-STD-810F
Thermal Shock			according to MIL-STD-810F
Vibration			according to MIL-STD-810F
MTBF	according to MIL-HDBK-217F, G.B		907.3 x 10^3 hours

Derating Graph [8]

(@ Chamber and natural convection 0.1m/s)

RP40-2415SFR

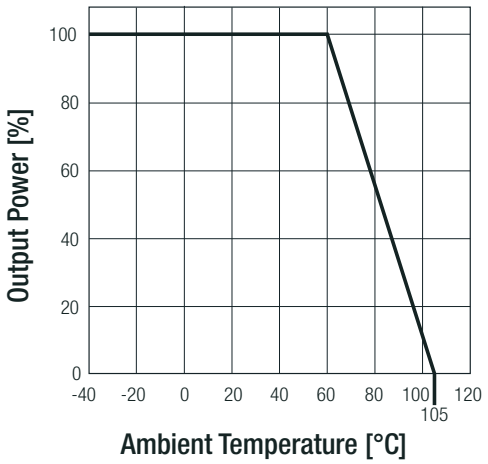

RP40-2415SFR-HC

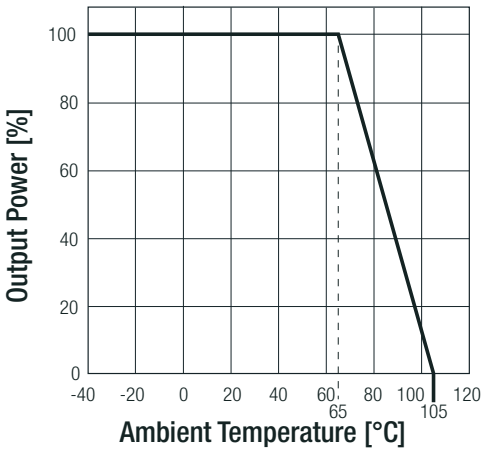

Notes:

Note8: Derating graphs are valid only for the shown part numbers. If you need detailed derating-information about a part-number not shown here please contact RECOM Techsupport for detailed information

Specifications (measured @ Ta= 25°C, nom. Vin, full load unless otherwise stated)

SAFETY AND CERTIFICATIONS		
Certificate Type (Safety)	**Condition**	**Standard**
Information Technology Equipment, General Requirements for Safety	E196683	UL60950-1, 2nd Edition, 2014 CAN/CSA-C22.2 No. 60950-1-07, 2nd Edition, 2014
Information Technology Equipment, General Requirements for Safety (LVD)	TW1708011-001	IEC60950-1:2005, 2nd Edition + A2:2013 EN60950-1:2006 + A2:2013
Railway Applications - Electrical Equipment used on rolling stock	15A100702E-C	EN50155:2007
EAC	RU-AT.49.09571	TP TC 004/2011
RoHS2		RoHS-2011/65/EU + AM-2015/863
EMC Compliance (Railway)	**Condition**	**Standard / Criterion**
Railway Applications - Electromagnetic Compatibility	***"refer to EMC filtering"***	EN50121-3-2:2006
Industrial, Scientific and Medical Equipment – Radio Frequency Disturbance Characteristics – Limits and Methods of Measurement		EN55011
ESD Electrostatic Discharge Immunity Test	Air ±2, ±4, ±8kV Contact ±2, ±4, ±6kV	EN61000-4-2, Criteria A
Radiated, Radio-Frequency, Electromagnetic Field Immunity Test	20V/m (80-1000MHz)	EN61000-4-3, Criteria A
Fast Transient and Burst Immunity (9)	DC Power Port: ±2kV	EN61000-4-4, Criteria A
Surge Immunity (9)	DC Power Port: L-L ±0.5, 1kV DC Power Port: L-E ±0.5, 1, 2kV	EN61000-4-5, Criteria A
Immunity to Conducted Disturbances, Induced by Radio-Frequency Fields	DC Power Port: 10V	EN61000-4-6, Criteria A
EMC Compliance (Multimedia)	**Condition**	**Standard / Criterion**
Electromagnetic Compatibility of Multimedia Equipment - Emission Requirements	with external filter ***"refer to EMC filtering"***	EN55032, Class A and B
Information Technology Equipment - Immunity Characteristics - Limits and Methods of Measurement		EN55024:2010 + A1:2015
ESD Electrostatic Discharge Immunity Test	Air ±2, ±4, ±8kV Contact ±2, ±4, ±6kV	IEC61000-4-2:2008, Criteria A
Radiated, Radio-Frequency, Electromagnetic Field Immunity Test	20V/m (80-1000MHz)	IEC61000-4-3:2006 + A2:2010, Criteria A
Fast Transient and Burst Immunity	DC Power Port: ±2kV	IEC61000-4-4:2012, Criteria A
Surge Immunity	DC Power Port: ±0.5, ±1, ±2kV	IEC61000-4-5:2014, Criteria A
Immunity to Conducted Disturbances, Induced by Radio-Frequency Fields	DC Power Port: 10V	IEC61000-4-6:2013, Criteria A
Power Magnetic Field Immunity	50Hz 100A/m, 1000A/m	IEC61000-4-8:2009, Criteria A

Notes:

Note9: An external input filter capacitor is required if the module has to meet EN61000-4-4 and -4-5.

The RP40-24xxFR requires an aluminum electrolytic capacitor (Nippon chemi-con KY series, 220µF/100V) and a TVS (SMDJ58A, 58V, 3000Watt peak pulse power) connected in parallel.

The RP40-48xxFR requires an aluminum electrolytic capacitor (Nippon chemi-con KY series, 220µF/100V) and a TVS (SMDJ120A,120V, 3000Watt peak pulse power) connected in parallel.

The RP40-110xxFR requires 3pcs aluminum electrolytic capacitor in parallel (Ruby-con BXF series, 68µF/200V) and two TVS (SMDJ90A, 90V, 3000Watt peak pulse power) in series, connected in parallel.

continued on next page

Specifications (measured @ Ta= 25°C, nom. Vin, full load unless otherwise stated)

EMC Filtering according to EN50121-3-2 (Single Outputs)

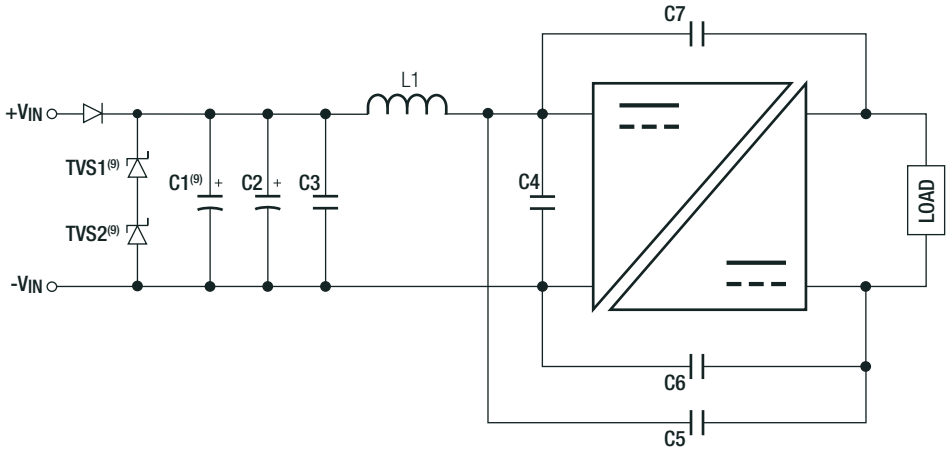

EMC Filtering according to EN50121-3-2 (Dual Outputs)

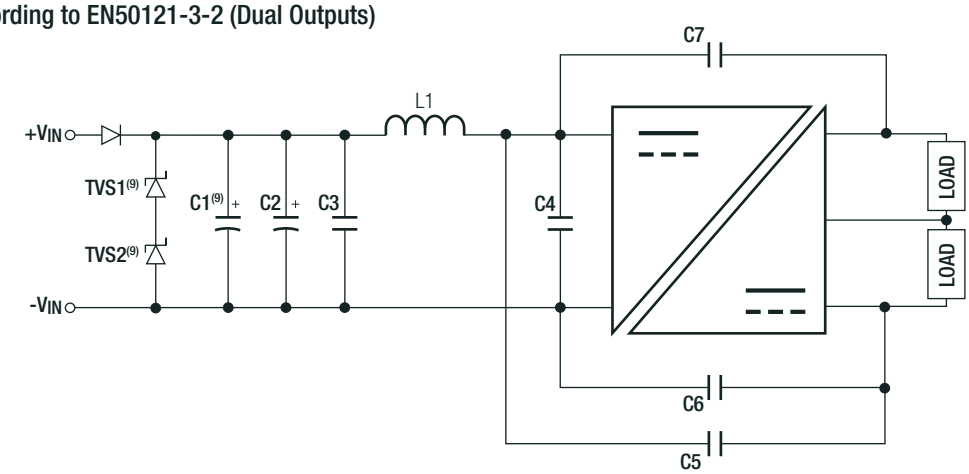

Component List

MODEL	TVS1	TVS2	C1(9)	C2	C3	C4	C5, C6, C7	L1
RP40-24xxS_DFR	SMDJ58A 58V, 3000W peak pulse power	N/A	220µF/100V	N/A	N/A	10µF/50V 1210 MLCC	680pF/3kV 1808 MLCC	2.2µH 11A SMD-Inductor
RP40-48xxS_DFR	SMDJ120A 120V, 3000W peak pulse power					4.7µF/100V 1210 MLCC		12µH 4A SMD-Inductor
RP40-110xxS_DFR	SMDJ90A 90V, 3000W peak pulse power	SMDJ90A 90V, 3000W peak pulse power	68µF/200V 3 in parallel	33µF/250V Al Cap. (lie down) Chemi-con KXJ	1µF/250V 1812 MLCC	1µF/250V 1812 MLCC	1000pF TDK CD series Y1	22µH 1.5A SMD-Inductor

continued on next page

Specifications (measured @ Ta= 25°C, nom. Vin, full load unless otherwise stated)

EMC Filtering according to EN55032 Class A (Single Outputs)

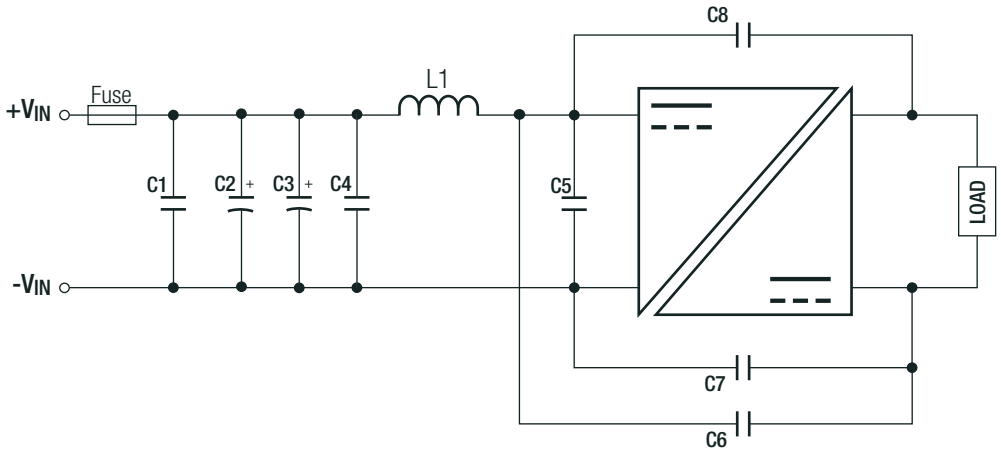

EMC Filtering according to EN55032 Class A (Dual Outputs)

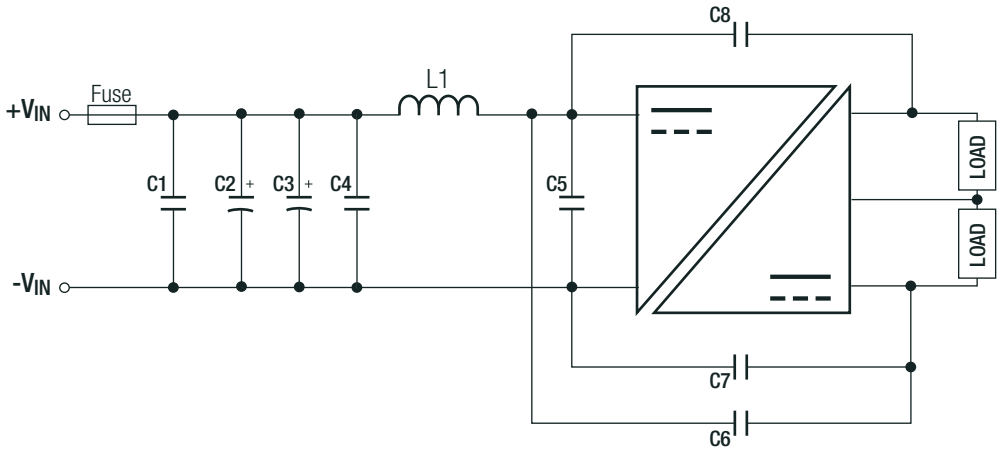

Component List

MODEL	C1	C2	C3	C4	C5	C6	C7	C8	L1
RP40-24xxS_DFR	10µF/50V 1210 MLCC	N/A	N/A	N/A	10µF/50V 1210 MLCC	680pF/3kV 1808 MLCC			2.2µH 11A SMD Inductor
RP40-48xxS_DFR	4.7µF/100V 1210 MLCC				4.7µF/100V 1210 MLCC				12µH 4A SMD Inductor
RP40-110xxS_DFR	N/A	33µF/250V Al Cap. (lie down) Chemi-con KXJ		1µF/250V 1812 MLCC		1000pF TDK CD series Y1			22µH 1.5A SMD Inductor

continued on next page

Specifications (measured @ Ta= 25°C, nom. Vin, full load unless otherwise stated)

EMC Filtering according to EN55032 Class B (24Vin and 48Vin, Single Outputs)

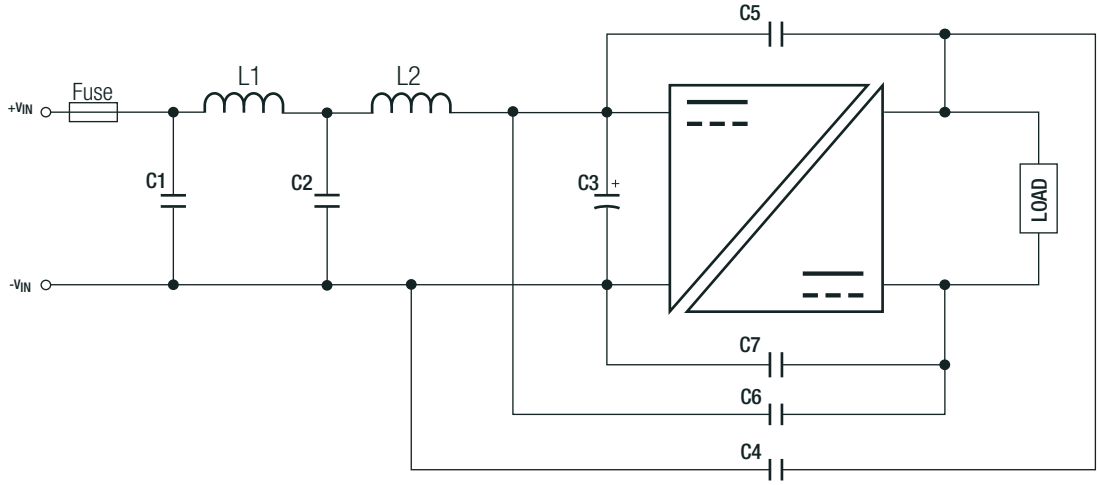

EMC Filtering according to EN55032 Class B (24Vin and 48Vin, Dual Outputs)

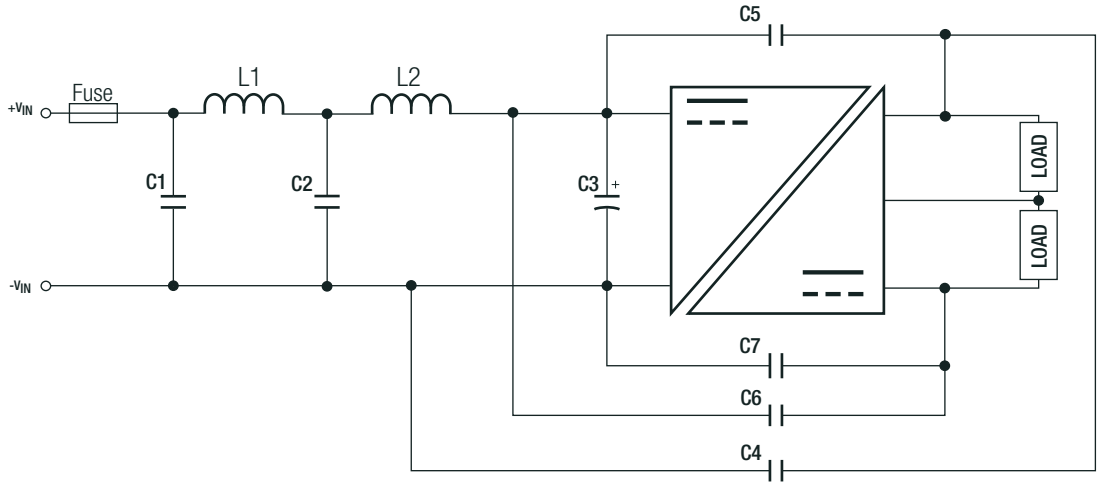

Component List

MODEL	C1/C2	C3	C4/C6	C5/C7	L1/L2
RP40-24xxS_DFR	10µF/50V 1210 MLCC	82µF/100V Al Cap. (lie down) Chemi-con KJ	1000pf/3kV 1808 MLCC	2200pf/3kV 1808 MLCC	3.3µH 10A SMD Inductor
RP40-48xxS_DFR	4.7µF/100V 1210 MLCC				12µH 4A SMD Inductor

continued on next page

Specifications (measured @ Ta= 25°C, nom. Vin, full load unless otherwise stated)

EMC Filtering according to EN55032 Class B (110Vin Single Outputs)

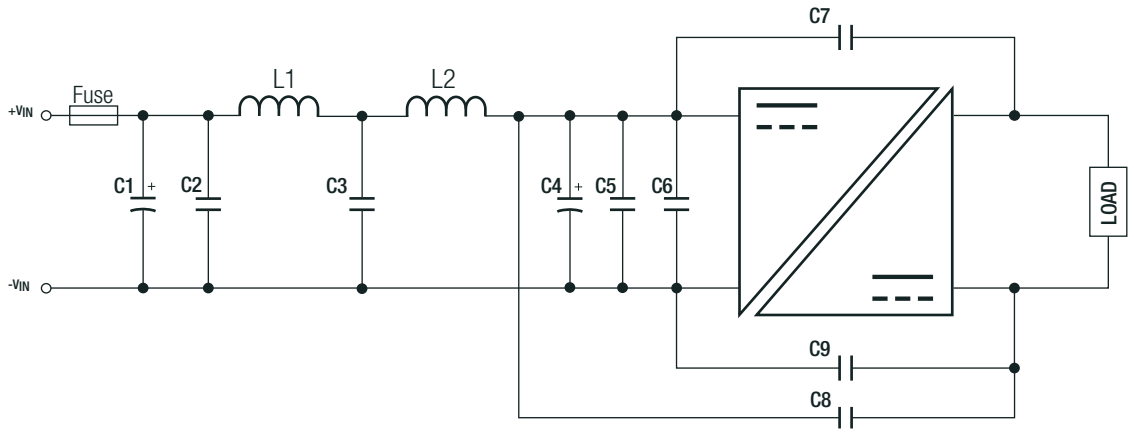

EMC Filtering according to EN55032 Class B (110Vin Dual Outputs)

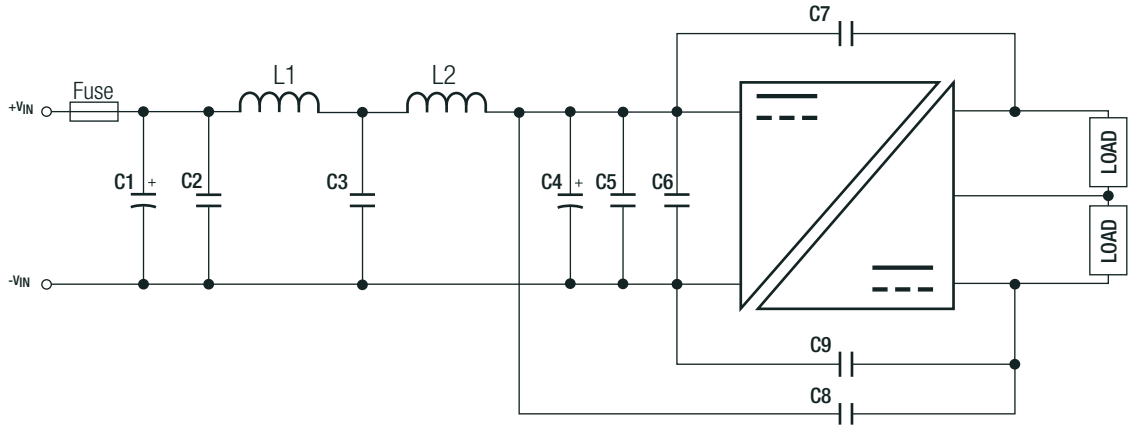

Component List

MODEL	C1	C2/C3	C4	C5/C6	C7/C8/C9	L1/L2
RP40-110xxS_DFR	33µF/250V Al Cap. (lie down) Chemicon -KXJ	1µF/250V 1812 MLCC	33µF/250V Al Cap. (lie down) Chemicon -KXJ	1µF/250V 1812 MLCC	2200pF TDK CD series Y1	22µH 1.5A SMD Inductor

DIMENSIONS and PHYSICAL CHARACTERISTICS

Parameter	Type	Value
Material	case base potting	copper alloy (CuZn33) FR4 PCB silicone (UL94 V-0)
Dimensions (LxWxH)	without Heat-sink with Heat-sink	50.8 x 25.4 x 10.2mm 56.8 x 25.4 x 16.8mm
Weight	without Heat-sink with Heat-sink	32g 43g

continued on next page

Specifications (measured @ Ta= 25°C, nom. Vin, full load unless otherwise stated)

Dimension Drawing (mm)

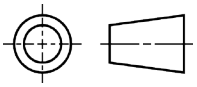

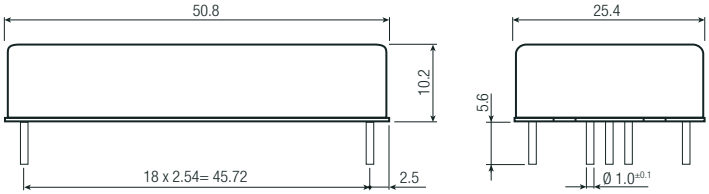

Pinning Information

Pin #	Single	Dual
1	+Vin	+Vin
2	-Vin	-Vin
3	CTRL (3)	CTRL (3)
4	+Vout	+Vout
5	-Vout	Com
6	Trim	-Vout

Tolerance: xx.x= ±0.5mm
xx.xx= ±0.25mm

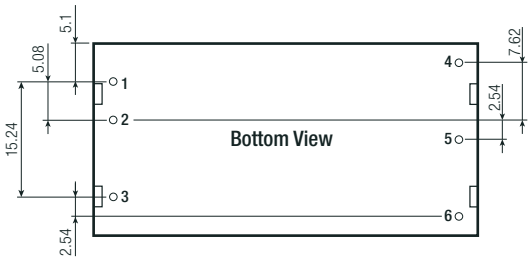

Recommended Footprint Details

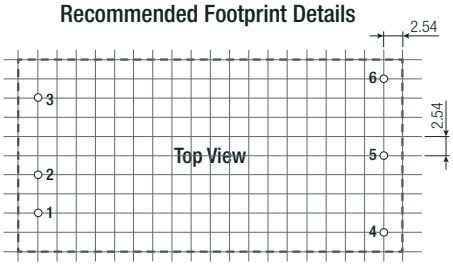

Dimension Drawing with Heat-sink (mm)

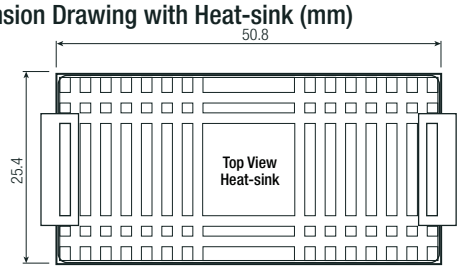

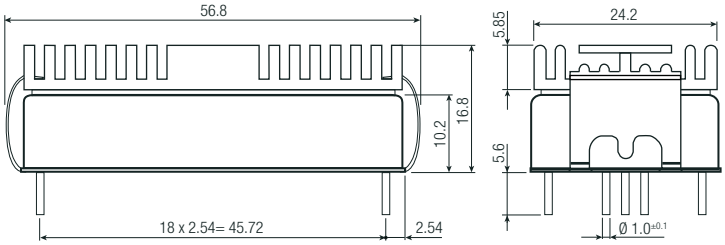

PACKAGING INFORMATION

Parameter	Type		Value
Packaging Dimension (LxWxH)	tube tray	without heat-sink with heat-sink	255.0 x 54.0 x 22.0mm 302.5 x 222.0 x 20.0mm
Packaging Quantity	tube tray	without heat-sink with heat-sink	9pcs 20pcs
Storage Temperature Range			-55°C to +125°C
Storage Humidity	non-condensing		5% - 95% RH

The product information and specifications may be subject to changes even without prior written notice.The product has been designed for various applications; its suitability lies in the responsibility of each customer. The products are not authorized for use in safety-critical applications without RECOM's explicit written consent. A safety-critical application is an application where a failure may reasonably be expected to endanger or cause loss of life, inflict bodily harm or damage property. The applicant shall indemnify and hold harmless RECOM, its affiliated companies and its representatives against any damage claims in connection with the unauthorized use of RECOM products in such safety-critical applications.

Компания «ЭлектроПласт» предлагает заключение долгосрочных отношений при поставках импортных электронных компонентов на взаимовыгодных условиях!

Наши преимущества:

- Оперативные поставки широкого спектра электронных компонентов отечественного и импортного производства напрямую от производителей и с крупнейших мировых складов;
- Поставка более 17-ти миллионов наименований электронных компонентов;
- Поставка сложных, дефицитных, либо снятых с производства позиций;
- Оперативные сроки поставки под заказ (от 5 рабочих дней);
- Экспресс доставка в любую точку России;
- Техническая поддержка проекта, помощь в подборе аналогов, поставка прототипов;
- Система менеджмента качества сертифицирована по Международному стандарту ISO 9001;
- Лицензия ФСБ на осуществление работ с использованием сведений, составляющих государственную тайну;
- Поставка специализированных компонентов (Xilinx, Altera, Analog Devices, Intersil, Interpoint, Microsemi, Aeroflex, Peregrine, Syfer, Eurofarad, Texas Instrument, Miteq, Cobham, E2V, MA-COM, Hittite, Mini-Circuits,General Dynamics и др.);

Помимо этого, одним из направлений компании «ЭлектроПласт» является направление «Источники питания». Мы предлагаем Вам помощь Конструкторского отдела:

- Подбор оптимального решения, техническое обоснование при выборе компонента;
- Подбор аналогов;
- Консультации по применению компонента;
- Поставка образцов и прототипов;
- Техническая поддержка проекта;
- Защита от снятия компонента с производства.

Как с нами связаться

Телефон: 8 (812) 309 58 32 (многоканальный)
Факс: 8 (812) 320-02-42
Электронная почта: org@eplast1.ru
Адрес: 198099, г. Санкт-Петербург, ул. Калинина, дом 2, корпус 4, литера А.