MIC2568

Dual-Slot PC Card/CardBus Power Controller

Preliminary

General Description

The MIC2568 dual-slot PC Card / CardBus power controller is a V_{CC} and V_{PP} power switch matrix that supports 3.3V and 5V PC Card (PCMCIA) slot power supply pins.

The MIC2568 can switch PC Card slot V_{CC} voltages between 0V (ground), 3.3V and 5.0V and V_{PP} voltages between 0V (ground), 3.3V, 5V, or high impedance at output currents of up to 1A for V_{CC} and 250mA for V_{PP}. The MIC2568 features well-controlled voltage rise and fall times. Each MIC2568 output voltage is switched by two digital inputs, typically controlled from a separate PC Card logic controller.

The MIC2568 is designed for efficient operation. In standby (sleep) mode the device draws very little quiescent current, typically only 0.3µA. The power controller includes thermal shutdown and protects itself and its PC Card ports with current limiting. Full cross-conduction lockout protects the system power supplies.

The MIC2568 is available in 28-pin SSOP and TSSOP packages.

Features

- Complete single-chip dual-slot power switch
- No external components required
- Output current limit and thermal shutdown
- Ultra-low power consumption
- Compatible with standard PC Card logic controllers
- Break-before-make switching (no transients)
- Digital V_{CC} and V_{PP} voltage selection
- > 1A V_{CC} output current per slot
- > 200mA V_{PP} output current per slot
- 28-pin SSO and TSSO package
- Pb-free 28-pin SSO package
- UL recognized, file #179633

Applications

- Dual-slot PC Card power supply voltage switch
- CardBus slot power supply control
- Data collection systems
- Machine control data input systems
- Wireless communications
- Bar code data collection systems
- Instrumentation configuration/datalogging
- Portable and desktop computer docking stations
- Power supply management
- Power analog switching

Typical Application

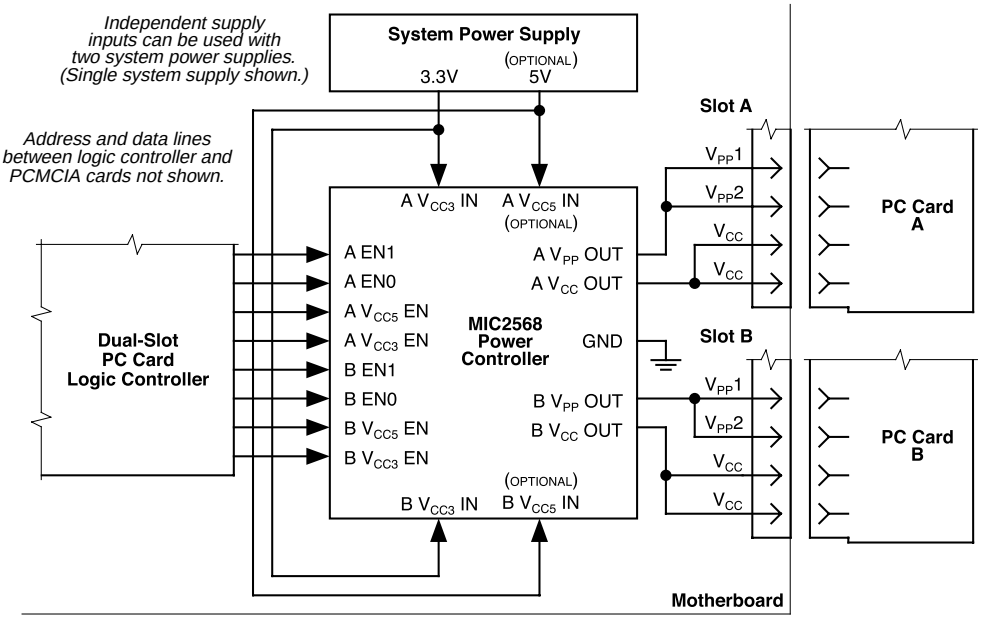

Dual-Slot PC Card Power Control

UL Recognized Component

Micrel, Inc. • 1849 Fortune Drive • San Jose, CA 95131 • USA • tel + 1 (408) 944-0800 • fax + 1 (408) 944-0970 • http://www.micrel.com

Ordering Information

Part Number	Operating Temperature Range	Package	Pb-Free
MIC2568-0BSM	–40°C to +85°C	28-pin SSOP	
MIC2568-1BSM	–40°C to +85°C	28-pin SSOP	
MIC2568-0YSM	–40°C to +85°C	28-pin SSOP	X
MIC2568-1YSM	–40°C to +85°C	28-pin SSOP	X
MIC2568-0BTS	–40°C to +85°C	28-pin TSSOP	
MIC2568-1BTS	–40°C to +85°C	28-pin TSSOP	

Pin Configuration

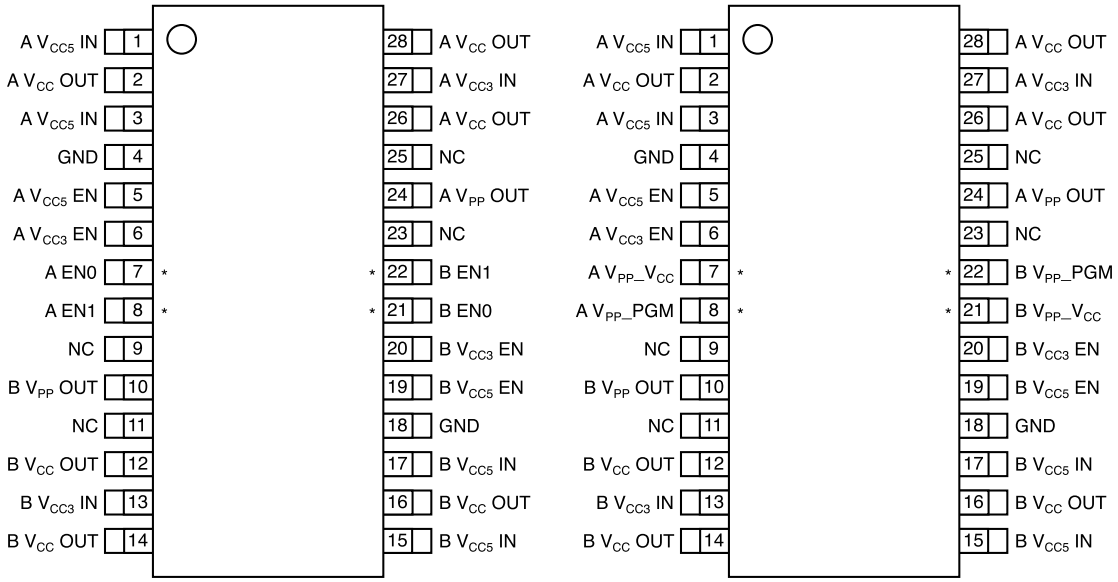

MIC2568-0 **MIC2568-1**

* Denotes pinout differences. Duplicate pins must be connected together for proper operation.
Example: "A V_{CC5}IN" pins 1 and 3 must be connected.

Pin Description

Pin Number MIC2568-0	Pin Number MIC2568-1	Pin Name	Pin Function
1, 3 / 15, 17	1, 3 / 15, 17	A / B V_{CC5} IN	5V Nominal Supply Input: Optional supply, switchable to V_{CC} and V_{PP} outputs.
2,26,28/12,14,16	2,26,28/12,14,16	A / B V_{CC} OUT	V_{CC} Output: 0V (ground), 3.3V, 5V, or high-impedance output. Pins 2, 26, and 28 must be externally connected. Pins 12, 14, and 16 must be externally connected.
4, 18	4, 18	GND	Ground.
5 / 19	5 / 19	A / B V_{CC5} EN	V_{CC} 5V Enable (Input).
6 / 20	6 / 20	A / B V_{CC3} EN	V_{CC} 3.3V Enable (Input).
7 / 21		A / B EN0	Enable 0: Micrel standard logic-control signal. MIC2568-0 only.
	7 / 21	A / B V_{PP}_V_{CC}	V_{PP}_V_{CC} Control: Cirrus Logic logic-controller compatible control signal. MIC2568-1 only.
8 / 22		A / B EN1	Enable 1: Micrel standard logic-control signal. MIC2568-0 only.
	8 / 22	A / B V_{PP}_PGM	Program: Cirrus Logic-compatible control signal. MIC2568-1 only.
24 / 10	24 / 10	A / B V_{PP} OUT	V_{PP} Output: 0V (ground), 3.3V, 5V, or high-impedance output.
9, 11, 23, 25	9, 11, 23, 25	NC	Not internally connected.
27 / 13	27 / 13	A / B V_{CC3} IN	3.3V Nominal Supply Input: Mandatory supply, switchable to V_{CC} and V_{PP} outputs. Also powers MIC2568 internal circuitry.

Absolute Maximum Ratings (Note 1)

V_{CC5} IN [5V] Supply Voltage ($V_{CC5\ IN}$) ..... +6V
V_{CC3} IN [3.3V] Supply Voltage ($V_{CC3\ IN}$) ..... +6V
Logic Input Voltages ($V_{CCx\ EN}$, V_{ENx}) ..... –0.3V to +6V
Storage Temperature (T_S) ..... –65°C to +150°C
Lead Temperature (5 sec.) ..... 260°C
ESD Rating, **Note 3**

Operating Ratings (Note 2)

V_{CC5} IN [5V] Supply Voltage ($V_{CC5\ IN}$), **Note 5**
..... +4.5V to +5.5V
V_{CC3} IN [3.3V] Supply Voltage ($V_{CC3\ IN}$), **Note 6**
..... +3.0V to +5.5V
Ambient Temperature Range (T_A) ..... –40°C to +85°C
Junction Temperature (T_J) ..... Internally Limited
Thermal Resistance
SSOP (θ_{JA}) ..... 84°C/W
TSSOP (θ_{JA}) ..... 100°C/W

Electrical Characteristics (Note 4)

$V_{CC3\ IN}$ = 3.3V, $V_{CC5\ IN}$ = 5.0V; specified over operating temperature range of –40°C to +85°C.

Symbol	Parameter	Conditions	Min	Typ	Max	Units
Digital Inputs						
V_{IH}	Logic-1 Input Voltage	$V_{CC3\ IN}$ = 3.0V to 5.5V	$0.7V_{CC3\ IN}$		5.5	V
V_{IL}	Logic-0 Input Voltage	$V_{CC3\ IN}$ = 3.0V to 5.5V	–0.3		$0.3V_{CC3\ IN}$	V
I_{IN}	Input Current	$0V \le V_{IN} \le 5.5V$			±2	µA
V_{PP} Output						
$I_{PP\ OUT}$ Hi-Z	High Impedance Output Leakage Current	Shutdown mode $0 \le V_{PP\ OUT}$ = 0V		1	10	µA
I_{PPSC}	Short Circuit Current Limit	$V_{PP\ OUT}$ = 0V	0.12	0.3		A
R_O	Switch Resistance	$V_{PP\ OUT}$ = 5V selected, $I_{PP\ OUT}$ = –100mA (sourcing)		1.4	**4**	Ω
		$V_{PP\ OUT}$ = 3.3V selected, $I_{PP\ OUT}$ = –100mA (sourcing)		1.5	**4**	Ω
		$V_{PP\ OUT}$ = 0V [ground] selected, $I_{PP\ OUT}$ = 50µA (sinking)		1300	3900	Ω
V_{PP} Switching Time (See Figure 1)						
t_1	Output Turn-On Delay, **Note 7**	$V_{PP\ OUT}$ = Hi-Z to 10% of 3.3V		5	50	µs
t_2		$V_{PP\ OUT}$ = Hi-Z to 10% of 5V		10	50	µs
t_3	Output Rise Time, **Note 7**	$V_{PP\ OUT}$ = 10% to 90% of 3.3V	100	200	800	µs
t_4		$V_{PP\ OUT}$ = 10% to 90% of 5V	100	300	1000	µs
t_5	Output Turnoff Fall Time, **Note 7**	$V_{PP\ OUT}$ = 90% to 10% of 3.3V		50	1000	ns
t_6		$V_{PP\ OUT}$ = 90% to 10% of 5V		50	1000	ns
t_7	Output Turnoff Delay Time, **Notes 7, 8**	$V_{PP\ OUT}$ = 3.3V to Hi-Z		**400**	1000	ns
t_8		$V_{PP\ OUT}$ = 5V to Hi-Z		**400**	1000	ns
V_{CC} Output						
I_{CCSC}	Short Circuit Current Limit	$V_{CC\ OUT}$ = 0V, normal mode, V_{CC3} or V_{CC5} switches	1.0	1.5		A
R_O	Switch Resistance	$V_{CC\ OUT}$ = 3.3V selected, $I_{CC\ OUT}$ = –1A (sourcing)		120	**180**	mΩ
		$V_{CC\ OUT}$ = 5V selected, $I_{CC\ OUT}$ = –1A (sourcing)		90	**135**	mΩ
		$V_{CC\ OUT}$ = 0V [ground] selected, $I_{CC\ OUT}$ = 0.1mA (sinking)		1800	3900	Ω

Symbol	Parameter	Conditions	Min	Typ	Max	Units
V_{CC} Switching Time (See Figure 2)						
t_9	Output Turn-On Delay Time, **Note 9**	$V_{CC\ OUT}$ = 0V to 10% of 3.3V		300	1500	µs
t_{10}		$V_{CC\ OUT}$ = 0V to 10% of 5.0V		750	3000	µs
t_{11}	Output Rise Time, **Note 9**	$V_{CC\ OUT}$ = 10% to 90% of 3.3V	200	700	2500	µs
t_{12}		$V_{CC\ OUT}$ = 10% to 90% of 5V	200	1500	6000	µs
t_{13}	Output Fall Time, **Note 9**	$V_{CC\ OUT}$ = 90% to 10% of 3.3V	100	300	1000	µs
t_{14}		$V_{CC\ OUT}$ = 90% to 10% of 5.0V	100	600	2000	µs
t_{15}	Output Turnoff Delay, **Notes 8, 9**	$V_{CC\ OUT}$ = 3.3V		0.65	2	ms
t_{16}		$V_{CC\ OUT}$ = 5V		0.7	2	ms
Power Supply						
I_{CC5}	V_{CC5} IN Supply Current (5V) **Note 5**	$V_{CC\ OUT}$ = 5V or 3.3V, $I_{CC\ OUT}$ = 0		8	50	µA
		$V_{CC\ OUT}$ = 0V (sleep mode)		0.2	10	µA
I_{CC3}	V_{CC3} IN Supply Current (3.3V) **Note 6**	$V_{CC\ OUT}$ = 5V or 3.3V, $I_{CC\ OUT}$ = 0		40	100	µA
		$V_{CC\ OUT}$ = 0V (sleep mode)		0.1	10	µA
Thermal Shutdown						
T_{SD}	Thermal Shutdown Temperature			140		°C

Note 1. Exceeding the absolute maximum rating may damage the device.

Note 2. The device is not guaranteed to function outside its operating rating.

Note 3. Devices are ESD sensitive. Handling precautions recommended.

Note 4. Specification for packaged product only.

Note 5. $V_{CC5\ IN}$ is not required for operation.

Note 6. $V_{CC3\ IN}$ powers all internal logic, bias, and drive circuitry, and is required for operation.

Note 7. R_L = 1kΩ connected to ground.

Note 8. Measurement is from the Hi-Z- or 0V-state command to the beginning of the slope. Measurement does not apply when device is in current limit or thermal shutdown.

Note 9. R_L = 10Ω connected to ground.

Output Timing Diagrams

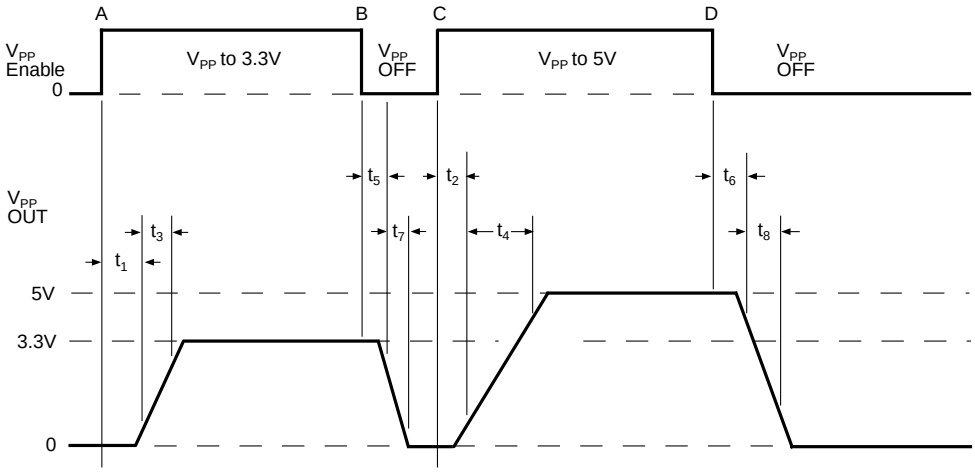

Figure 1. V_{PP} Timing Diagram

$V_{PP\ EN}$ is shown generically. R_L = 100Ω. Load capacitance is negligible. Refer to "MIC2568-0 Logic Table" for specific control logic input.

At time **A**) V_{PP} = 3.3V, **B**) V_{PP} is disabled, **C**) V_{PP} is programmed to 5V, **D**) V_{PP} is disabled.

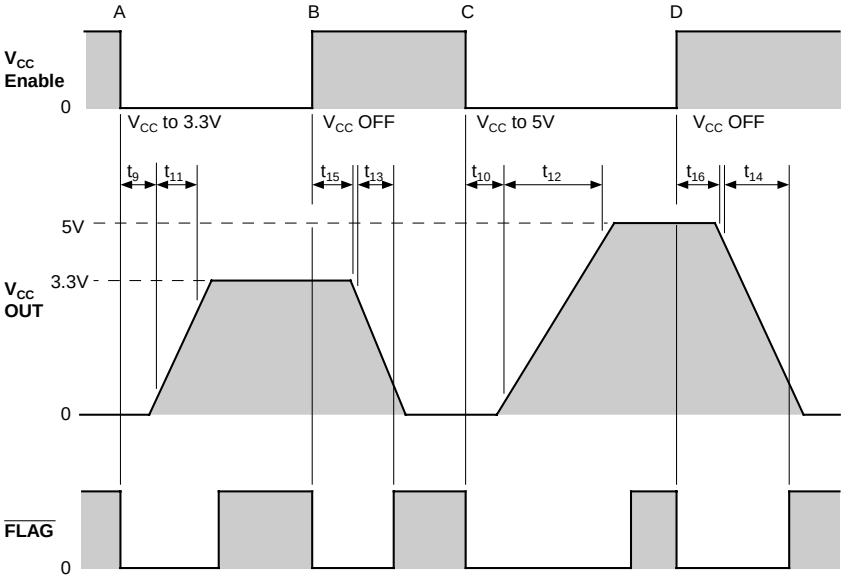

Figure 2. V_{CC} Timing Diagram

$V_{CC\ EN}$ is shown generically. R_L = 10Ω. Refer to "MIC2568-0 Logic Table" for specific control logic input.

At time **A**) V_{CC} is programmed to 3.3V, **B**) V_{CC} is disabled, **C**) V_{CC} is programmed to 5V, **D**) V_{CC} is disabled.

MIC2568-0 Logic Table

V_{CC5} EN	V_{CC3} EN	EN1	EN0	V_{CC} OUT	V_{PP} OUT
0	0	0	0	0V*	Hi-Z
0	0	0	1	0V*	Hi-Z
0	0	1	0	0V*	Hi-Z
0	0	1	1	0V*	0V*
0	1	0	0	3.3V	Hi-Z
0	1	0	1	3.3V	3.3V
0	1	1	0	3.3V	Hi-Z
0	1	1	1	3.3V	0V*
1	0	0	0	5V	Hi-Z
1	0	0	1	5V	5V
1	0	1	0	5V	Hi-Z
1	0	1	1	5V	0V*
1	1	0	0	3.3V	Hi-Z
1	1	0	1	3.3V	3.3V
1	1	1	0	3.3V	5V
1	1	1	1	3.3V	0V*

MIC2568-1 Logic Table

MIC2568-1 control logic is compatible with the Cirrus Logic CL-PD6710 and CL-PD672x-series logic controllers.

V_{CC5} EN	V_{CC3} EN	V_{PP}_PGM	V_{PP}_V_{CC}	V_{CC} OUT	V_{PP} OUT
0	0	0	0	0V*	0V*
0	0	0	1	0V*	Hi-Z
0	0	1	0	0V*	Hi-Z
0	0	1	1	0V*	Hi-Z
0	1	0	0	5V	0V*
0	1	0	1	5V	5V
0	1	1	0	5V	Hi-Z
0	1	1	1	5V	Hi-Z
1	0	0	0	3.3V	0V*
1	0	0	1	3.3V	3.3V
1	0	1	0	3.3V	Hi-Z
1	0	1	1	3.3V	Hi-Z
1	1	0	0	0V*	0V*
1	1	0	1	0V*	Hi-Z
1	1	1	0	0V*	Hi-Z
1	1	1	1	0V*	Hi-Z

* clamped to ground

Functional Diagram

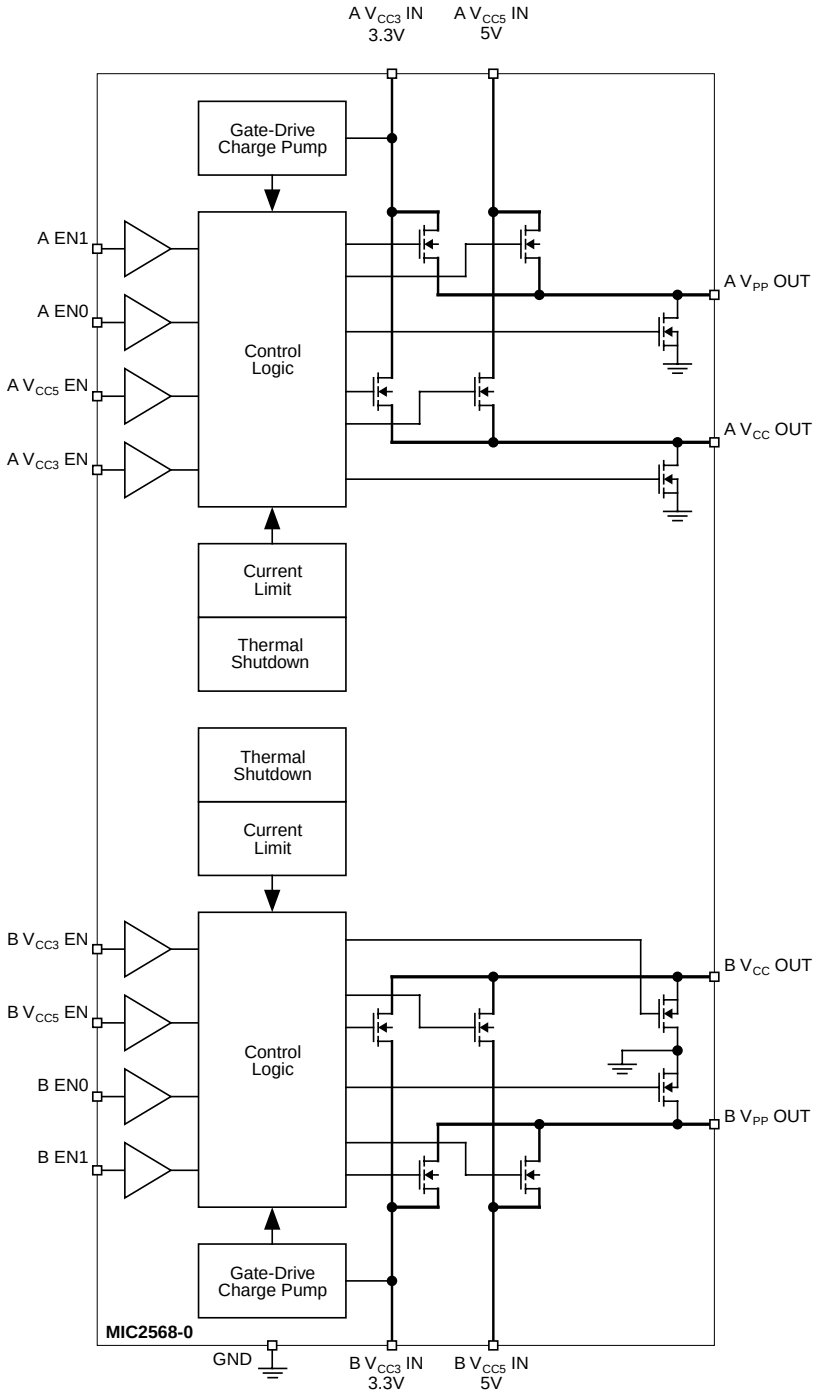

Applications Information

PC Card power control for two sockets is easily accomplished using the Micrel MIC2568 PC Card/CardBus Slot Power Controller IC.

Output Voltage Selection

Four control bits per socket determine V_{CC} and V_{PP} output voltages and standby- or operate-mode conditions. Input logic threshold voltages are compatible with common PC Card logic controllers using either 3.3V or 5V supplies.

The V_{CC} outputs can be individually switched between 0V (ground) or 3.3V and 5V at the maximum allowable PC Card current. The V_{PP} outputs can be individually switched between 0V (ground), 3.3V or 5V (V_{CC3} or V_{CC5} voltages), or high impedance. When V_{CC} = 0V (ground) is selected, the MIC2568 goes into sleep mode and draws only nanoamperes of leakage current.

Switching speeds are controlled to prevent damage to sensitive loads and meet all PC Card Specification timing requirements. V_{CC} switches are turned on and off slowly. If commanded to switch directly from one V_{CC} to the other (without first turning off and waiting 100ms), enhancement of the second switch begins only after the first is off (break-before-make protection).

Supply Input

The MIC2568 itself is powered from the V_{CC3} IN pin (3.3V-nominal supply input). Bias its internal MOSFETs is generated by a charge pump quadrupler. Refer to "5V-Only V_{CC} Application" and Figure 4 for information on using the MIC2568 without a 3.3V supply.

Output Current and Protection

The MIC2568 meets or exceeds all PCMCIA current specifications. Its switches are capable of passing the maximum current needed by any PC Card. For system and card protection, output currents are internally limited. For full system protection, long-term output short circuits (millisecond or longer) invoke overtemperature shutdown, protecting the MIC2568, system power supplies, card socket pins, and PC Card.

Bypass Capacitors

Both V_{CC3} IN and V_{CC5} IN pins should be bypassed with 1µF low-ESR surface-mount ceramic capacitors mounted near the MIC2568 chip.

Both V_{CC} OUT and V_{PP} OUT pins may use 0.01µF to 0.1µF capacitors for noise reduction and to reduce the chance of (electrostatic discharge) ESD damage.

PC Card Slot Implementation

The MIC2568 is designed for PC Card applications, including the CardBus option, that do not require a 12V supply.

When a memory card is initially inserted, it must receive a V_{CC} voltage (either 3.3V ±0.3V or 5.0V ±5%). The initial voltage is determined by a combination of mechanical socket keys and voltage-sense pins. Each card sends handshaking data to the logic controller which determines whether that card requires a V_{PP} voltage and whether the card is designed for dual V_{CC} voltages. If the card is compatible with, and requests, a different V_{CC} level, the controller disables V_{CC}, waits at least 100ms, and then enables the new V_{CC} voltage.

If no card is inserted, or the system is in sleep mode, the logic controller outputs a (V_{CC3} EN, V_{CC5} EN) = (0, 0) to the MIC2568, which shuts down V_{CC}. This also places the switch into its high-impedance output sleep mode.

Basic V_{PP} and V_{CC} Switch Application

Refer to Figure 3. A single system power supply feeds both slot-A and slot-B supply inputs. Although the PC Card specification defines two V_{PP} outputs (V_{PP} 1 and V_{PP} 2) per card, they are usually connected together.

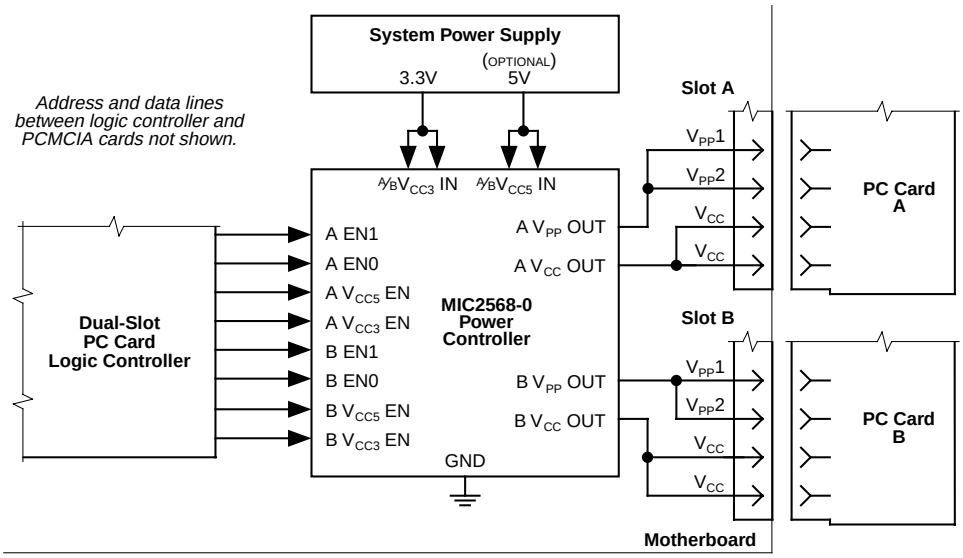

Figure 3. Basic V_{PP} and V_{CC} Switch

5V-Only V_{CC} Application

To use the MIC2568 in applications where only a single 5V V_{CC} is available (no 3.3V V_{CC}), connect V_{CC5} (5V supply) to the V_{CC3} IN pin. Refer to Figure 4. In this configuration, $V_{CC\ OUT}$ will be 5V when either V_{CC3} switch or V_{CC5} switch is enabled.

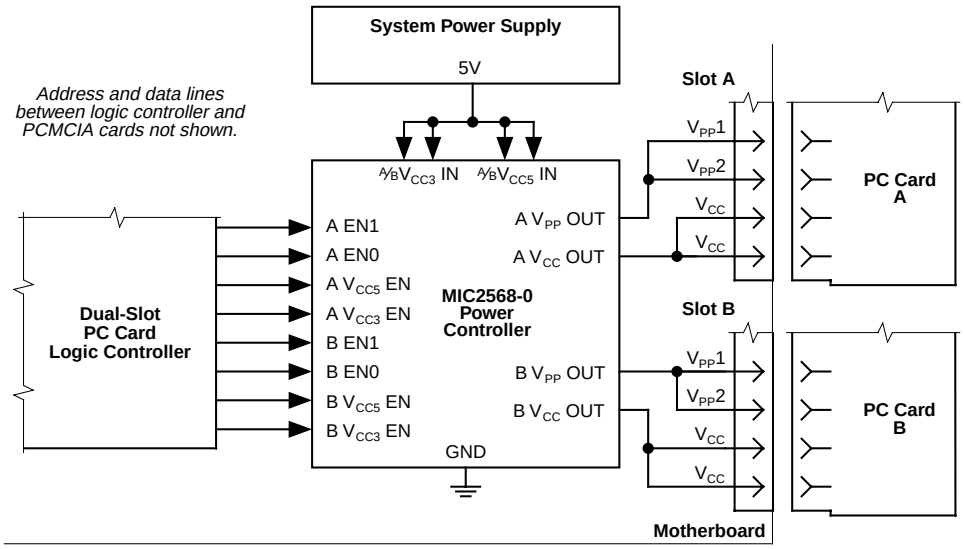

Figure 4. 5V-Only V_{CC} Application

Package Information

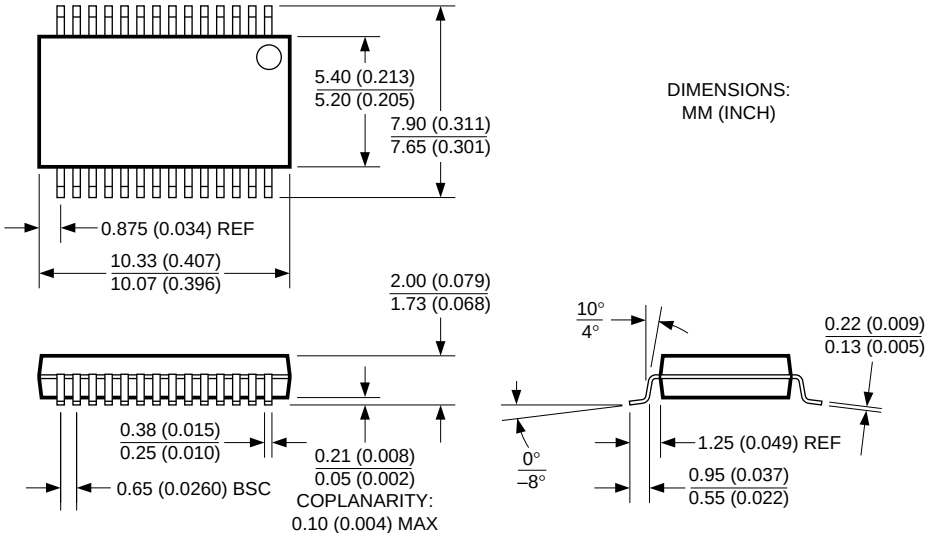

28-Pin SSOP (SM)

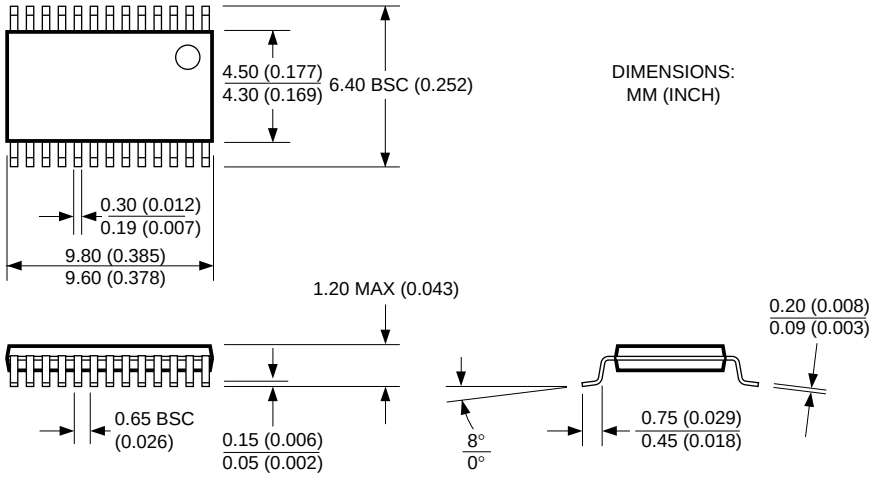

28-Pin TSSOP (TS)

MICREL, INC. 1849 FORTUNE DRIVE SAN JOSE, CA 95131 USA

TEL + 1 (408) 944-0800 FAX + 1 (408) 944-0970 WEB http://www.micrel.com

The information furnished by Micrel in this datasheet is believed to be accurate and reliable. However, no responsibility is assumed by Micrel for its use. Micrel reserves the right to change circuitry and specifications at any time without notification to the customer.

Micrel Products are not designed or authorized for use as components in life support appliances, devices or systems where malfunction of a product can reasonably be expected to result in personal injury. Life support devices or systems are devices or systems that (a) are intended for surgical implant into the body or (b) support or sustain life, and whose failure to perform can be reasonably expected to result in a significant injury to the user. A Purchaser's use or sale of Micrel Products for use in life support appliances, devices or systems is at Purchaser's own risk and Purchaser agrees to fully indemnify Micrel for any damages resulting from such use or sale.

© 2003 Micrel, Incorporated.

Компания «ЭлектроПласт» предлагает заключение долгосрочных отношений при поставках импортных электронных компонентов на взаимовыгодных условиях!

Наши преимущества:

- Оперативные поставки широкого спектра электронных компонентов отечественного и импортного производства напрямую от производителей и с крупнейших мировых складов;
- Поставка более 17-ти миллионов наименований электронных компонентов;
- Поставка сложных, дефицитных, либо снятых с производства позиций;
- Оперативные сроки поставки под заказ (от 5 рабочих дней);
- Экспресс доставка в любую точку России;
- Техническая поддержка проекта, помощь в подборе аналогов, поставка прототипов;
- Система менеджмента качества сертифицирована по Международному стандарту ISO 9001;
- Лицензия ФСБ на осуществление работ с использованием сведений, составляющих государственную тайну;
- Поставка специализированных компонентов (Xilinx, Altera, Analog Devices, Intersil, Interpoint, Microsemi, Aeroflex, Peregrine, Syfer, Eurofarad, Texas Instrument, Miteq, Cobham, E2V, MA-COM, Hittite, Mini-Circuits,General Dynamics и др.);

Помимо этого, одним из направлений компании «ЭлектроПласт» является направление «Источники питания». Мы предлагаем Вам помощь Конструкторского отдела:

- Подбор оптимального решения, техническое обоснование при выборе компонента;
- Подбор аналогов;
- Консультации по применению компонента;
- Поставка образцов и прототипов;
- Техническая поддержка проекта;
- Защита от снятия компонента с производства.

Как с нами связаться

Телефон: 8 (812) 309 58 32 (многоканальный)
Факс: 8 (812) 320-02-42
Электронная почта: org@eplast1.ru
Адрес: 198099, г. Санкт-Петербург, ул. Калинина, дом 2, корпус 4, литера А.