DATA SHEET

For a complete data sheet, please also download:

- The IC06 74HC/HCT/HCU/HCMOS Logic Family Specifications
- The IC06 74HC/HCT/HCU/HCMOS Logic Package Information
- The IC06 74HC/HCT/HCU/HCMOS Logic Package Outlines

74HC/HCT40103
8-bit synchronous binary down counter

Product specification
Supersedes data of December 1990
File under Integrated Circuits, IC06

1998 Jul 08

Philips Semiconductors

PHILIPS

8-bit synchronous binary down counter 74HC/HCT40103

FEATURES

- Cascadable
- Synchronous or asynchronous preset
- Output capability: standard
- I_{CC} category: MSI

GENERAL DESCRIPTION

The 74HC/HCT40103 are high-speed Si-gate CMOS devices and are pin compatible with the “40103” of the “4000B” series. They are specified in compliance with JEDEC standard no. 7A.

The 74HC/HCT40103 consist each of an 8-bit synchronous down counter with a single output which is active when the internal count is zero. The “40103” contains a single 8-bit binary counter and has control inputs for enabling or disabling the clock (CP), for clearing the counter to its maximum count, and for presetting the counter either synchronously or asynchronously. All control inputs and the terminal count output ($\overline{TC}$) are active-LOW logic.

In normal operation, the counter is decremented by one count on each positive-going transition of the clock (CP).

Counting is inhibited when the terminal enable input ($\overline{TE}$) is HIGH. The terminal count output ($\overline{TC}$) goes LOW when the count reaches zero if $\overline{TE}$ is LOW, and remains LOW for one full clock period.

When the synchronous preset enable input ($\overline{PE}$) is LOW, data at the jam input (P_0 to P_7) is clocked into the counter on the next positive-going clock transition regardless of the state of $\overline{TE}$. When the asynchronous preset enable input ($\overline{PL}$) is LOW, data at the jam input (P_0 to P_7) is asynchronously forced into the counter regardless of the state of $\overline{PE}$, $\overline{TE}$, or CP. The jam inputs (P_0 to P_7) represent a single 8-bit binary word.

When the master reset input ($\overline{MR}$) is LOW, the counter is asynchronously cleared to its maximum count (decimal 255) regardless of the state of any other input. The precedence relationship between control inputs is indicated in the function table.

If all control inputs except $\overline{TE}$ are HIGH at the time of zero count, the counters will jump to the maximum count, giving a counting sequence of 256 clock pulses long.
The “40103” may be cascaded using the $\overline{TE}$ input and the $\overline{TC}$ output, in either a synchronous or ripple mode.

QUICK REFERENCE DATA

GND = 0 V; T_{amb} = 25 °C; $t_r = t_f$ = 6 ns

SYMBOL	PARAMETER	CONDITIONS	TYPICAL		UNIT
			HC	HCT	
t_{PHL}/ t_{PLH}	propagation delay CP to $\overline{TC}$	C_L = 15 pF; V_{CC} = 5 V	30	30	ns
f_{max}	maximum clock frequency		32	31	MHz
C_I	input capacitance		3.5	3.5	pF
C_{PD}	power dissipation capacitance per package	notes 1 and 2	24	27	pF

Notes

1. C_{PD} is used to determine the dynamic power dissipation (P_D in μW):

   $P_D = C_{PD} \times V_{CC}^2 \times f_i + \sum (C_L \times V_{CC}^2 \times f_o)$ where:

   f_i = input frequency in MHz

   f_o = output frequency in MHz

   $\sum (C_L \times V_{CC}^2 \times f_o)$ = sum of outputs

   C_L = output load capacitance in pF

   V_{CC} = supply voltage in V

2. For HC the condition is V_I = GND to V_{CC}
   For HCT the condition is V_I = GND to V_{CC} – 1.5 V

ORDERING INFORMATION

TYPE NUMBER	PACKAGE		
	NAME	DESCRIPTION	VERSION
74HC40103N; 74HCT40103N	DIP16	plastic dual in-line package; 16 leads (300 mil); long body	SOT38-1
74HC40103D; 74HCT40103D	SO16	plastic small outline package; 16 leads; body width 3.9 mm	SOT109-1
74HC40103DB; 74HCT40103DB	SSOP16	plastic shrink small outline package; 16 leads; body width 5.3 mm	SOT338-1
74HC40103PW;	TSSOP16	plastic thin shrink small outline package; 16 leads; body width 4.4 mm	SOT403-1

PIN DESCRIPTION

PIN NO.	SYMBOL	NAME AND FUNCTION
1	CP	clock input (LOW-to-HIGH, edge-triggered)
2	$\overline{MR}$	asynchronous master reset input (active LOW)
3	$\overline{TE}$	terminal enable input
4, 5, 6, 7, 10, 11, 12, 13	P_0 to P_7	jam inputs
8	GND	ground (0 V)
9	$\overline{PL}$	asynchronous preset enable input (active LOW)
14	$\overline{TC}$	terminal count output (active LOW)
15	$\overline{PE}$	synchronous preset enable input (active LOW)
16	V_{CC}	positive supply voltage

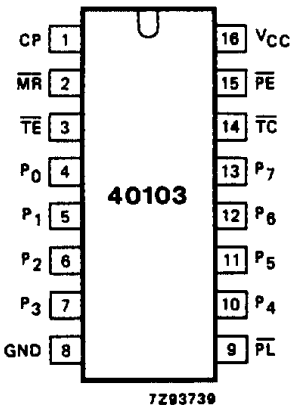

Fig.1 Pin configuration.

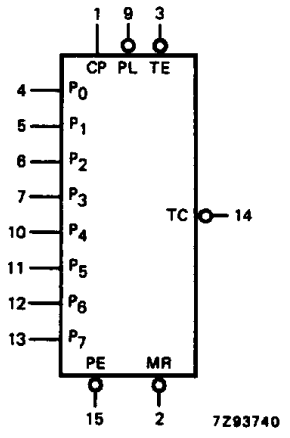

Fig.2 Logic symbol.

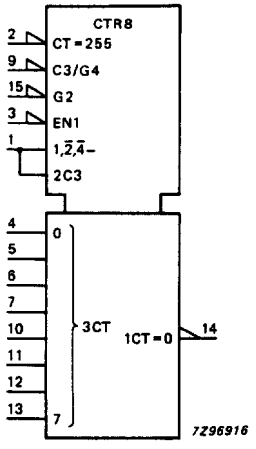

Fig.3 IEC logic symbol.

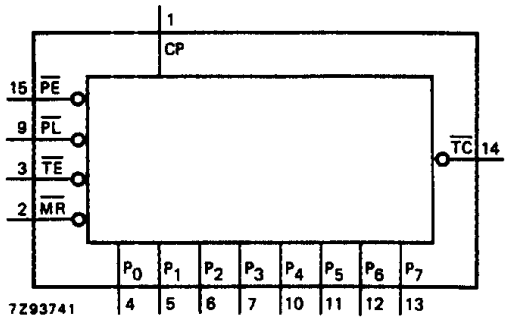

Fig.4 Functional diagram.

FUNCTION TABLE

CONTROL INPUTS				PRESET MODE	ACTION
$\overline{MR}$	$\overline{PL}$	$\overline{PE}$	$\overline{TE}$		
H	H	H	H	synchronous	inhibit counter
H	H	H	L		count down
H	H	L	X		preset on next LOW-to HIGH clock transition
H	L	X	X	asynchronous	preset asynchronously
L	X	X	X		clear to maximum count

Note

1. Clock connected to CP.
   Synchronous operation: changes occur on the LOW-to-HIGH CP transition.
   Jam inputs: MSD = P_7, LSD = P_0.
   H = HIGH voltage level
   L = LOW voltage level
   X = don't care

APPLICATIONS

- Divide-by-n counters
- Programmable timers
- Interrupt timers
- Cycle/program counters

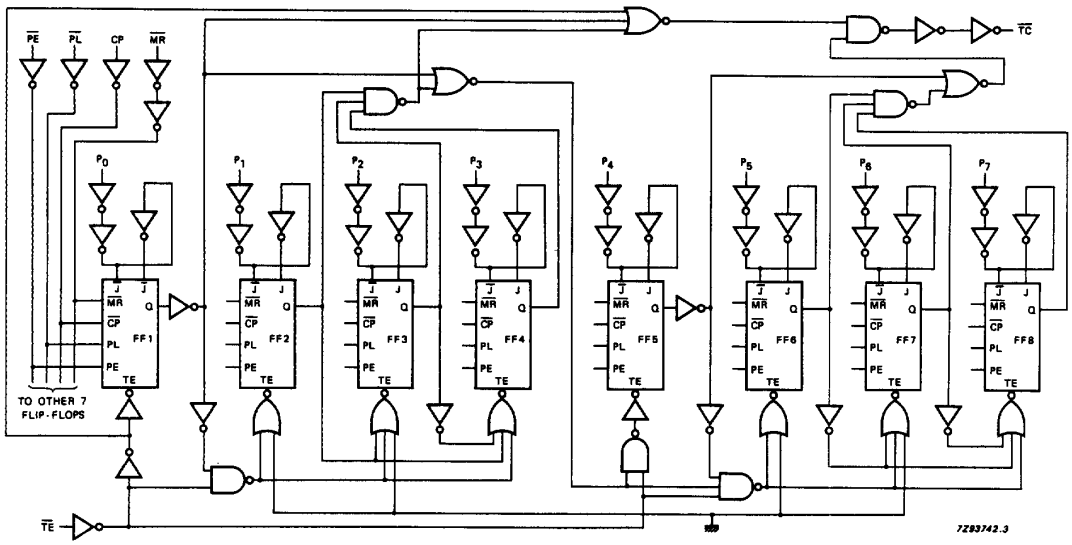

Fig.5 Logic diagram.

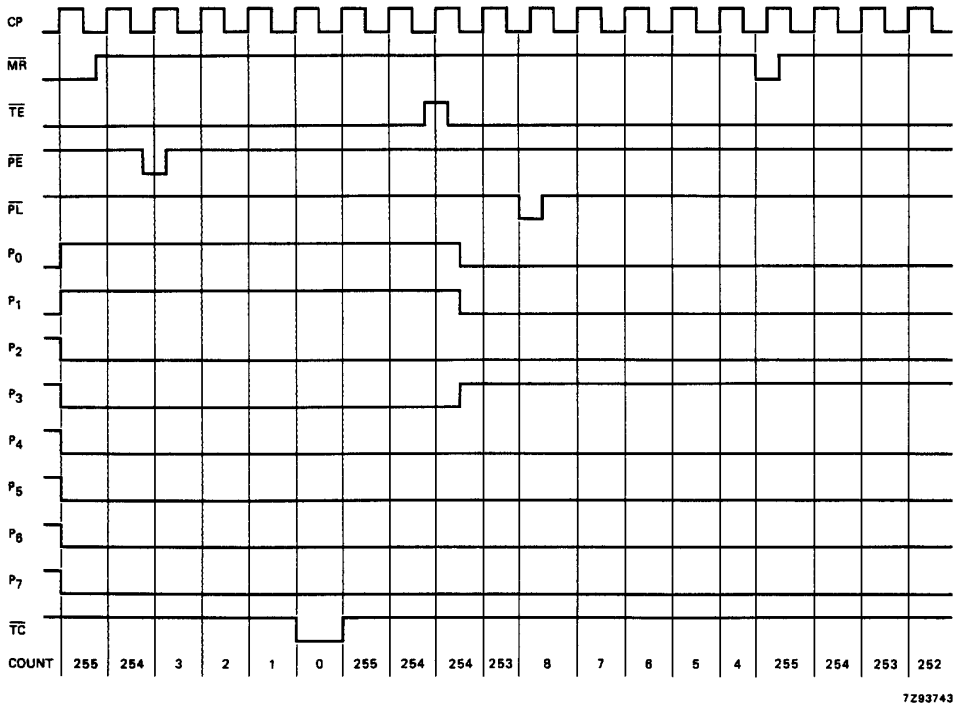

Fig.6 Timing diagram.

DC CHARACTERISTICS FOR 74HC

For the DC characteristics see *"74HC/HCT/HCU/HCMOS Logic Family Specifications"*.

Output capability: standard
I_{CC} category: MSI

AC CHARACTERISTICS FOR 74HC

GND = 0 V; $t_r = t_f$ = 6 ns; C_L = 50 pF

SYMBOL	PARAMETER	T_{amb} (°C)							UNIT	TEST CONDITIONS	
		74HC								V_{CC} (V)	WAVEFORMS
		+25			−40 to +85		−40 to +125				
		min.	typ.	max.	min.	max.	min.	max.			
t_{PHL}/ t_{PLH}	propagation delay CP to $\overline{TC}$		96	300		375		450	ns	2.0	Fig.7
			35	60		75		90		4.5	
			28	51		64		77		6.0	
t_{PHL}/ t_{PLH}	propagation delay $\overline{TE}$ to $\overline{TC}$		50	175		220		265	ns	2.0	Fig.8
			18	35		44		53		4.5	
			14	30		37		45		6.0	
t_{PHL}/ t_{PLH}	propagation delay $\overline{PL}$ to $\overline{TC}$		102	315		395		475	ns	2.0	Fig.9
			37	63		79		95		4.5	
			30	53		40		81		6.0	
t_{PHL}	propagation delay $\overline{MR}$ to $\overline{TC}$		83	275		345		415	ns	2.0	Fig.9
			30	55		69		83		4.5	
			24	47		59		71		6.0	
t_{THL}/ t_{TLH}	output transition time		19	75		95		110	ns	2.0	Figs 7 and 8
			7	15		19		22		4.5	
			6	13		16		19		6.0	
t_W	clock pulse width HIGH or LOW	165	22		205		250		ns	2.0	Fig.7
		33	8		41		50			4.5	
		28	6		35		43			6.0	
t_W	master reset pulse width LOW	125	39		155		190		ns	2.0	Fig.9
		25	14		31		38			4.5	
		21	11		26		32			6.0	
t_W	preset enable pulse width $\overline{PL}$; LOW	125	33		155		190		ns	2.0	Fig.9
		25	12		31		38			4.5	
		21	10		26		32			6.0	
t_{rem}	removal time $\overline{MR}$ to CP or $\overline{PL}$ to CP	50	14		65		75		ns	2.0	Fig.10
		10	5		13		15			4.5	
		9	4		11		13			6.0	
t_{su}	set-up time $\overline{PE}$ to CP	75	22		95		110		ns	2.0	Fig.11
		15	8		19		22			4.5	
		13	6		16		19			6.0	

SYMBOL	PARAMETER	T_{amb} (°C)							UNIT	TEST CONDITIONS	
		74HC								V_{CC} (V)	WAVEFORMS
		+25			−40 to +85		−40 to +125				
		min.	typ.	max.	min.	max.	min.	max.			
t_{su}	set-up time $\overline{TE}$ to CP	150	44		190		225		ns	2.0	Fig.11
		30	16		38		45			4.5	
		26	13		33		38			6.0	
t_{su}	set-up time P_n to CP	75	22		95		110		ns	2.0	Fig.12
		15	8		19		22			4.5	
		13	6		16		19			6.0	
t_h	hold time $\overline{PE}$ to CP	0	−14		0		0		ns	2.0	Fig.11
		0	−5		0		0			4.5	
		0	−4		0		0			6.0	
t_h	hold time $\overline{TE}$ to CP	0	−30		0		0		ns	2.0	Fig.11
		0	−11		0		0			4.5	
		0	−9		0		0			6.0	
t_h	hold time P_n to CP	0	−17		0		0		ns	2.0	Fig.12
		0	−6		0		0			4.5	
		0	−5		0		0			6.0	
f_{max}	maximum clock pulse frequency	3.0	10		2.4		2.0		MHz	2.0	Fig.7
		15	29		12		10			4.5	
		18	35		14		12			6.0	

DC CHARACTERISTICS FOR 74HCT

For the DC characteristics see *"74HC/HCT/HCU/HCMOS Logic Family Specifications"*.

Output capability: standard
I_{CC} category: MSI

Note to HCT types

The value of additional quiescent supply current (ΔI_{CC}) for a unit load of 1 is given in the family specifications. To determine ΔI_{CC} per input, multiply this value by the unit load coefficient shown in the table below.

INPUT	UNIT LOAD COEFFICIENT
CP, $\overline{PE}$	1.50
$\overline{MR}$	1.00
$\overline{TE}$	0.80
$\overline{PL}$	0.35
P_n	0.25

AC CHARACTERISTICS FOR 74HCT

GND = 0 V; $t_r = t_f$ = 6 ns; C_L = 50 pF

SYMBOL	PARAMETER	T_{amb} (°C)							UNIT	TEST CONDITIONS	
		74HCT								V_{CC} (V)	WAVEFORMS
		+25			−40 to +85		−40 to +125				
		min.	typ.	max.	min.	max.	min.	max.			
t_{PHL}/ t_{PLH}	propagation delay CP to $\overline{TC}$		35	60		75		90	ns	4.5	Fig.7
t_{PHL}/ t_{PLH}	propagation delay $\overline{TE}$ to $\overline{TC}$		23	40		50		60	ns	4.5	Fig.8
t_{PHL}/ t_{PLH}	propagation delay $\overline{PL}$ to $\overline{TC}$		44	75		94		112	ns	4.5	Fig.9
t_{PHL}	propagation delay $\overline{MR}$ to $\overline{TC}$		29	55		69		83	ns	4.5	Fig.9
t_{THL}/ t_{TLH}	output transition time		7	15		19		22	ns	4.5	Figs. 7 and 8
t_W	clock pulse width HIGH or LOW	33	10		41		50		ns	4.5	Fig.7
t_W	master reset pulse width LOW	30	16		38		45		ns	4.5	Fig.9
t_W	preset enable pulse width $\overline{PL}$; LOW	38	22		48		57		ns	4.5	Fig.9
t_{rem}	removal time $\overline{MR}$ to CP or $\overline{PL}$ to CP	10	1		13		15		ns	4.5	Fig.10
t_{su}	set-up time $\overline{PE}$ to CP	20	11		25		30		ns	4.5	Fig.11
t_{su}	set-up time $\overline{TE}$ to CP	40	20		50		60		ns	4.5	Fig.11

SYMBOL	PARAMETER	T_{amb} (°C)							UNIT	TEST CONDITIONS	
		74HCT								V_{CC} (V)	WAVEFORMS
		+25			−40 to +85		−40 to +125				
		min.	typ.	max.	min.	max.	min.	max.			
t_{su}	set-up time P_n to CP	20	11		25		30		ns	4.5	Fig.12
t_h	hold time $\overline{PE}$ to CP	2	–3		2		2		ns	4.5	Fig.11
t_h	hold time $\overline{TE}$ to CP	0	–10		0		0		ns	4.5	Fig.11
t_h	hold time P_n to CP	0	–5		0		0		ns	4.5	Fig.12
f_{max}	maximum clock pulse frequency	15	28		12		10		MHz	4.5	Fig.7

AC WAVEFORMS

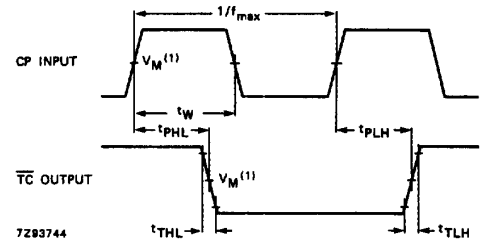

(1) HC : V_M = 50%; V_I = GND to V_{CC}.
HCT: V_M = 1.3 V; V_I = GND to 3 V.

Fig.7 Waveforms showing the clock input (CP) to $\overline{TC}$ propagation delays, the clock pulse width, the output transition times and the maximum clock pulse frequency.

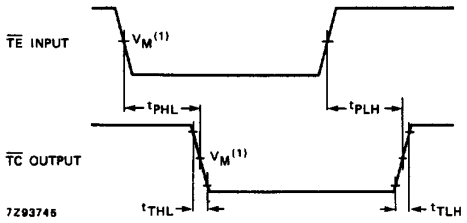

(1) HC : V_M = 50%; V_I = GND to V_{CC}.
HCT: V_M = 1.3 V; V_I = GND to 3 V.

Fig.8 Waveforms showing the $\overline{TE}$ to $\overline{TC}$ propagation delays.

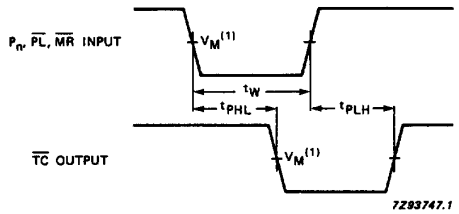

(1) HC : V_M = 50%; V_I = GND to V_{CC}.
HCT: V_M = 1.3 V; V_I = GND to 3 V.

Fig.9 Waveforms showing $\overline{PL}$, $\overline{MR}$, P_n to $\overline{TC}$ propagation delays.

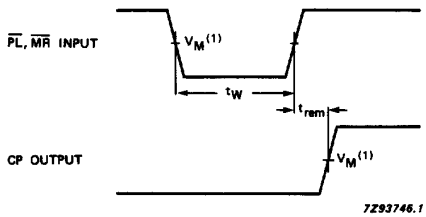

(1) HC : V_M = 50%; V_I = GND to V_{CC}.
HCT: V_M = 1.3 V; V_I = GND to 3 V.

Fig.10 Waveforms showing removal time for $\overline{MR}$ and $\overline{PL}$.

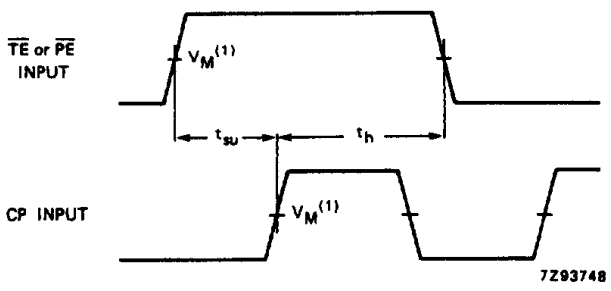

(1) HC : V_M = 50%; V_I = GND to V_{CC}.
HCT: V_M = 1.3 V; V_I = GND to 3 V.

Fig.11 Waveforms showing hold and set-up times for $\overline{MR}$ or $\overline{PE}$ to CP.

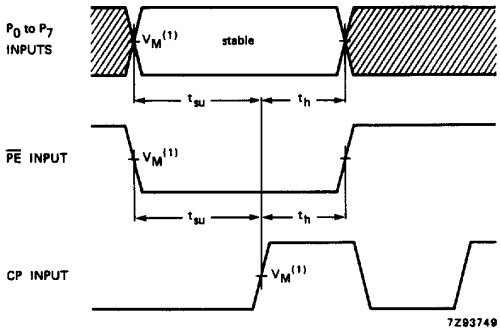

The shaded areas indicate when the input is permitted to change for predictable output performance.

(1) HC : V_M = 50%; V_I = GND to V_{CC}.
HCT: V_M = 1.3 V; V_I = GND to 3 V.

Fig.12 Waveforms showing hold and set-up times for P_n, $\overline{PE}$ to CP.

APPLICATION INFORMATION

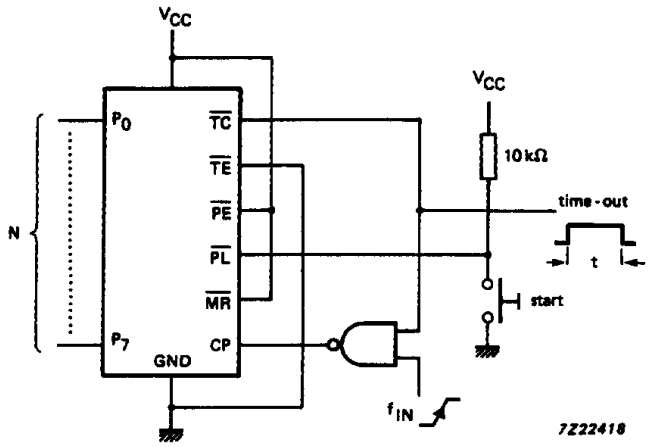

Fig.13 Programmable timer.

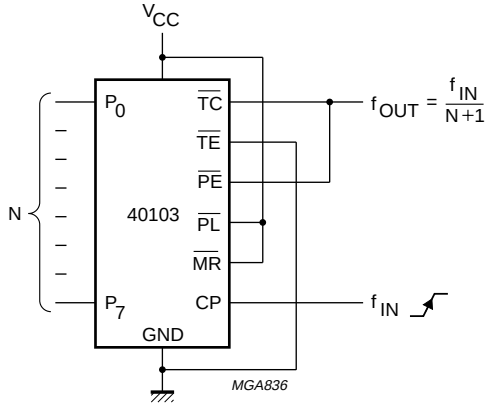

Fig.14 Divide-by-N counter.

PACKAGE OUTLINES

DIP16: plastic dual in-line package; 16 leads (300 mil); long body **SOT38-1**

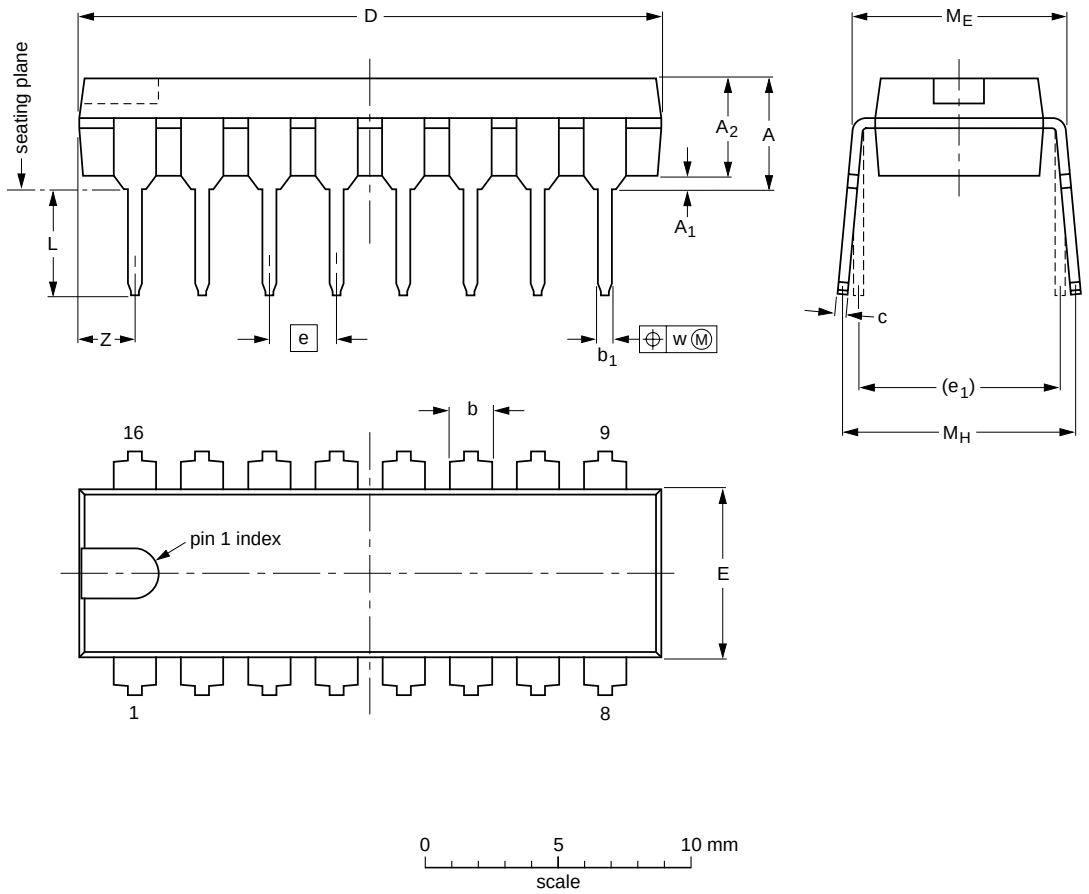

DIMENSIONS (inch dimensions are derived from the original mm dimensions)

UNIT	A max.	A_1 min.	A_2 max.	b	b_1	c	D (1)	E (1)	e	e_1	L	M_E	M_H	w	Z (1) max.
mm	4.7	0.51	3.7	1.40 1.14	0.53 0.38	0.32 0.23	21.8 21.4	6.48 6.20	2.54	7.62	3.9 3.4	8.25 7.80	9.5 8.3	0.254	2.2
inches	0.19	0.020	0.15	0.055 0.045	0.021 0.015	0.013 0.009	0.86 0.84	0.26 0.24	0.10	0.30	0.15 0.13	0.32 0.31	0.37 0.33	0.01	0.087

Note

1. Plastic or metal protrusions of 0.25 mm maximum per side are not included.

OUTLINE VERSION	REFERENCES				EUROPEAN PROJECTION	ISSUE DATE
	IEC	JEDEC	EIAJ			
SOT38-1	050G09	MO-001AE				~~92-10-02~~ 95-01-19

SO16: plastic small outline package; 16 leads; body width 3.9 mm **SOT109-1**

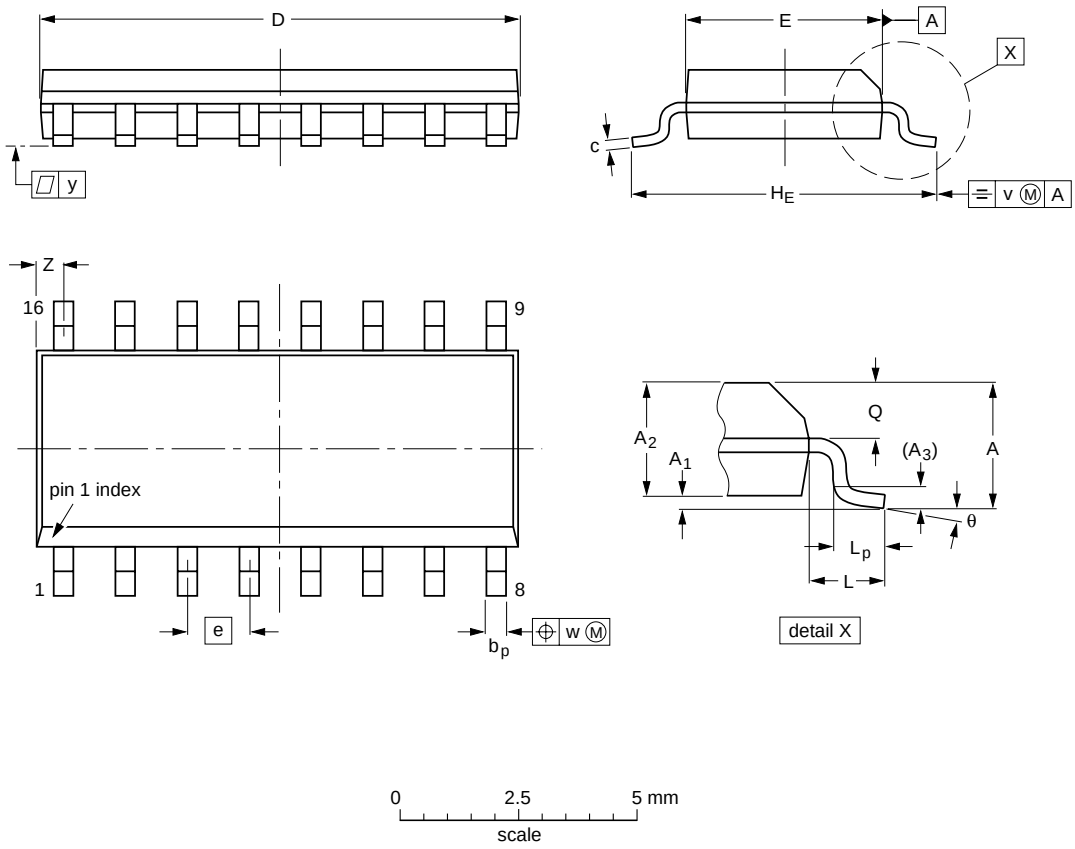

DIMENSIONS (inch dimensions are derived from the original mm dimensions)

UNIT	A max.	A_1	A_2	A_3	b_p	c	$D^{(1)}$	$E^{(1)}$	e	H_E	L	L_p	Q	v	w	y	$Z^{(1)}$	θ
mm	1.75	0.25 0.10	1.45 1.25	0.25	0.49 0.36	0.25 0.19	10.0 9.8	4.0 3.8	1.27	6.2 5.8	1.05	1.0 0.4	0.7 0.6	0.25	0.25	0.1	0.7 0.3	8° 0°
inches	0.069	0.010 0.004	0.057 0.049	0.01	0.019 0.014	0.0100 0.0075	0.39 0.38	0.16 0.15	0.050	0.244 0.228	0.041	0.039 0.016	0.028 0.020	0.01	0.01	0.004	0.028 0.012	

Note

1. Plastic or metal protrusions of 0.15 mm maximum per side are not included.

OUTLINE VERSION	REFERENCES				EUROPEAN PROJECTION	ISSUE DATE
	IEC	JEDEC	EIAJ			
SOT109-1	076E07S	MS-012AC				~~95-01-23~~ 97-05-22

SSOP16: plastic shrink small outline package; 16 leads; body width 5.3 mm **SOT338-1**

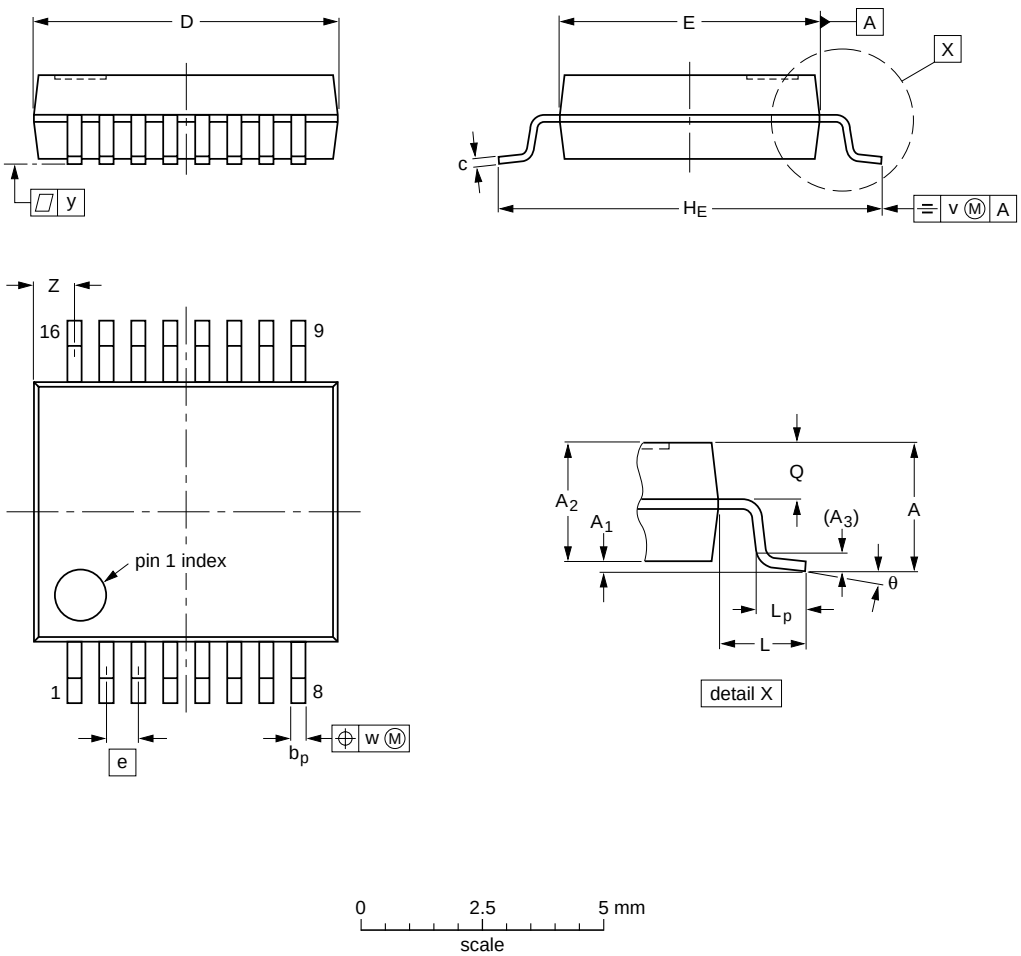

DIMENSIONS (mm are the original dimensions)

UNIT	A max.	A_1	A_2	A_3	b_p	c	D (1)	E (1)	e	H_E	L	L_p	Q	v	w	y	Z (1)	θ
mm	2.0	0.21 0.05	1.80 1.65	0.25	0.38 0.25	0.20 0.09	6.4 6.0	5.4 5.2	0.65	7.9 7.6	1.25	1.03 0.63	0.9 0.7	0.2	0.13	0.1	1.00 0.55	8° 0°

Note

1. Plastic or metal protrusions of 0.25 mm maximum per side are not included.

OUTLINE VERSION	REFERENCES				EUROPEAN PROJECTION	ISSUE DATE
	IEC	JEDEC	EIAJ			
SOT338-1		MO-150AC				~~94-01-14~~ 95-02-04

TSSOP16: plastic thin shrink small outline package; 16 leads; body width 4.4 mm **SOT403-1**

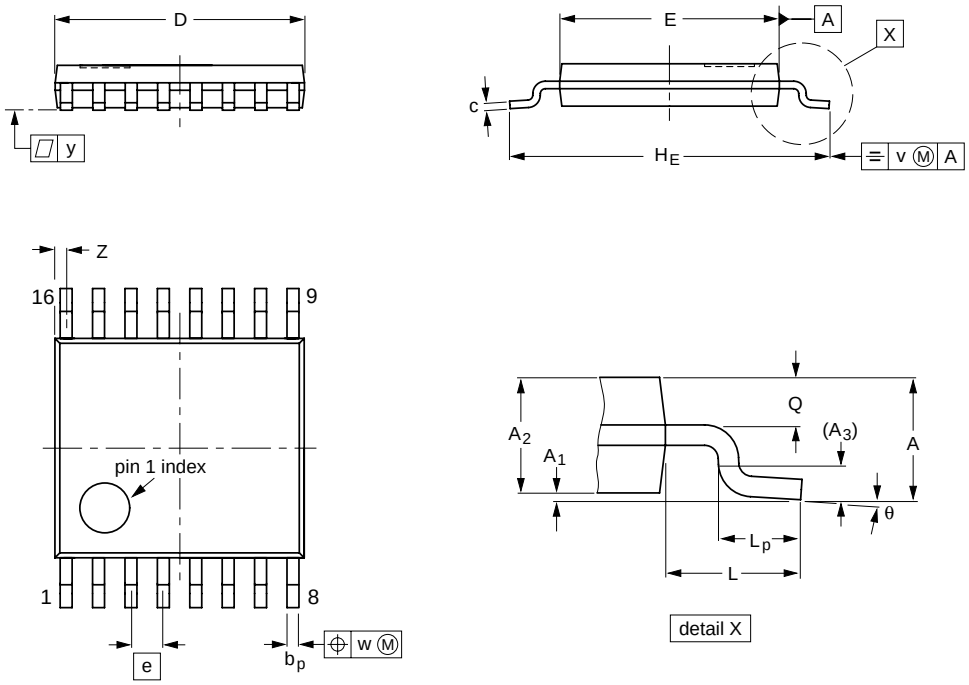

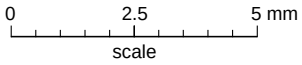

DIMENSIONS (mm are the original dimensions)

UNIT	A max.	A_1	A_2	A_3	b_p	c	D (1)	E (2)	e	H_E	L	L_p	Q	v	w	y	Z (1)	θ
mm	1.10	0.15 0.05	0.95 0.80	0.25	0.30 0.19	0.2 0.1	5.1 4.9	4.5 4.3	0.65	6.6 6.2	1.0	0.75 0.50	0.4 0.3	0.2	0.13	0.1	0.40 0.06	8° 0°

Notes

1. Plastic or metal protrusions of 0.15 mm maximum per side are not included.
2. Plastic interlead protrusions of 0.25 mm maximum per side are not included.

OUTLINE VERSION	REFERENCES				EUROPEAN PROJECTION	ISSUE DATE
	IEC	JEDEC	EIAJ			
SOT403-1		MO-153				~~94-07-12~~ 95-04-04

SOLDERING

Introduction

There is no soldering method that is ideal for all IC packages. Wave soldering is often preferred when through-hole and surface mounted components are mixed on one printed-circuit board. However, wave soldering is not always suitable for surface mounted ICs, or for printed-circuits with high population densities. In these situations reflow soldering is often used.

This text gives a very brief insight to a complex technology. A more in-depth account of soldering ICs can be found in our *"Data Handbook IC26; Integrated Circuit Packages"* (order code 9398 652 90011).

DIP

SOLDERING BY DIPPING OR BY WAVE

The maximum permissible temperature of the solder is 260 °C; solder at this temperature must not be in contact with the joint for more than 5 seconds. The total contact time of successive solder waves must not exceed 5 seconds.

The device may be mounted up to the seating plane, but the temperature of the plastic body must not exceed the specified maximum storage temperature ($T_{stg\ max}$). If the printed-circuit board has been pre-heated, forced cooling may be necessary immediately after soldering to keep the temperature within the permissible limit.

REPAIRING SOLDERED JOINTS

Apply a low voltage soldering iron (less than 24 V) to the lead(s) of the package, below the seating plane or not more than 2 mm above it. If the temperature of the soldering iron bit is less than 300 °C it may remain in contact for up to 10 seconds. If the bit temperature is between 300 and 400 °C, contact may be up to 5 seconds.

SO, SSOP and TSSOP

REFLOW SOLDERING

Reflow soldering techniques are suitable for all SO, SSOP and TSSOP packages.

Reflow soldering requires solder paste (a suspension of fine solder particles, flux and binding agent) to be applied to the printed-circuit board by screen printing, stencilling or pressure-syringe dispensing before package placement.

Several techniques exist for reflowing; for example, thermal conduction by heated belt. Dwell times vary between 50 and 300 seconds depending on heating method.

Typical reflow temperatures range from 215 to 250 °C. Preheating is necessary to dry the paste and evaporate the binding agent. Preheating duration: 45 minutes at 45 °C.

WAVE SOLDERING

Wave soldering can be used for all SO packages. Wave soldering is **not** recommended for SSOP and TSSOP packages, because of the likelihood of solder bridging due to closely-spaced leads and the possibility of incomplete solder penetration in multi-lead devices.

If wave soldering is used - **and cannot be avoided for SSOP and TSSOP packages** - the following conditions must be observed:

- A double-wave (a turbulent wave with high upward pressure followed by a smooth laminar wave) soldering technique should be used.
- The longitudinal axis of the package footprint must be parallel to the solder flow and must incorporate solder thieves at the downstream end.

Even with these conditions:

- **Only consider wave soldering SSOP packages that have a body width of 4.4 mm, that is SSOP16 (SOT369-1) or SSOP20 (SOT266-1).**
- **Do not consider wave soldering TSSOP packages with 48 leads or more, that is TSSOP48 (SOT362-1) and TSSOP56 (SOT364-1).**

During placement and before soldering, the package must be fixed with a droplet of adhesive. The adhesive can be applied by screen printing, pin transfer or syringe dispensing. The package can be soldered after the adhesive is cured.

Maximum permissible solder temperature is 260 °C, and maximum duration of package immersion in solder is 10 seconds, if cooled to less than 150 °C within 6 seconds. Typical dwell time is 4 seconds at 250 °C.

A mildly-activated flux will eliminate the need for removal of corrosive residues in most applications.

REPAIRING SOLDERED JOINTS

Fix the component by first soldering two diagonally- opposite end leads. Use only a low voltage soldering iron (less than 24 V) applied to the flat part of the lead. Contact time must be limited to 10 seconds at up to 300 °C. When using a dedicated tool, all other leads can be soldered in one operation within 2 to 5 seconds between 270 and 320 °C.

DEFINITIONS

Data sheet status	
Objective specification	This data sheet contains target or goal specifications for product development.
Preliminary specification	This data sheet contains preliminary data; supplementary data may be published later.
Product specification	This data sheet contains final product specifications.
Limiting values	
Limiting values given are in accordance with the Absolute Maximum Rating System (IEC 134). Stress above one or more of the limiting values may cause permanent damage to the device. These are stress ratings only and operation of the device at these or at any other conditions above those given in the Characteristics sections of the specification is not implied. Exposure to limiting values for extended periods may affect device reliability.	
Application information	
Where application information is given, it is advisory and does not form part of the specification.	

LIFE SUPPORT APPLICATIONS

These products are not designed for use in life support appliances, devices, or systems where malfunction of these products can reasonably be expected to result in personal injury. Philips customers using or selling these products for use in such applications do so at their own risk and agree to fully indemnify Philips for any damages resulting from such improper use or sale.

Компания «ЭлектроПласт» предлагает заключение долгосрочных отношений при поставках импортных электронных компонентов на взаимовыгодных условиях!

Наши преимущества:

- Оперативные поставки широкого спектра электронных компонентов отечественного и импортного производства напрямую от производителей и с крупнейших мировых складов;
- Поставка более 17-ти миллионов наименований электронных компонентов;
- Поставка сложных, дефицитных, либо снятых с производства позиций;
- Оперативные сроки поставки под заказ (от 5 рабочих дней);
- Экспресс доставка в любую точку России;
- Техническая поддержка проекта, помощь в подборе аналогов, поставка прототипов;
- Система менеджмента качества сертифицирована по Международному стандарту ISO 9001;
- Лицензия ФСБ на осуществление работ с использованием сведений, составляющих государственную тайну;
- Поставка специализированных компонентов (Xilinx, Altera, Analog Devices, Intersil, Interpoint, Microsemi, Aeroflex, Peregrine, Syfer, Eurofarad, Texas Instrument, Miteq, Cobham, E2V, MA-COM, Hittite, Mini-Circuits,General Dynamics и др.);

Помимо этого, одним из направлений компании «ЭлектроПласт» является направление «Источники питания». Мы предлагаем Вам помощь Конструкторского отдела:

- Подбор оптимального решения, техническое обоснование при выборе компонента;
- Подбор аналогов;
- Консультации по применению компонента;
- Поставка образцов и прототипов;
- Техническая поддержка проекта;
- Защита от снятия компонента с производства.

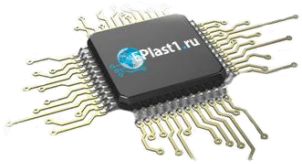

Как с нами связаться

Телефон: 8 (812) 309 58 32 (многоканальный)
Факс: 8 (812) 320-02-42
Электронная почта: org@eplast1.ru
Адрес: 198099, г. Санкт-Петербург, ул. Калинина, дом 2, корпус 4, литера А.