# HIGH SPEED 16K x 8 CMOS PROM/RPROM

## KEY FEATURES

- **Very Fast Access Time**
  — 35 ns
- **Low Power Consumption**
- **Fast Programming**
- **Pin Compatible with Am27S51 and N82HS1281**
- **Immune to Latch-Up**
  — Up to 200 mA
- **ESD Protection Exceeds 2000 V**

## GENERAL DESCRIPTION

The WS57C51C is a High Performance 128K UV Erasable Electrically Re-Programmable Read Only Memory (RPROM). It is manufactured in an advanced CMOS technology which enables it to operate at Bipolar PROM speeds while consuming only 25% of the power required by its Bipolar counterparts.

A further advantage of the WS57C51C over Bipolar PROM devices is the fact that it utilizes a proven EPROM technology. This enables the entire memory array to be tested for switching characteristics and functionality after assembly. Unlike devices which cannot be erased, every WS5751C in a windowed package is 100% tested with worst case test patterns both before and after assembly.

The WS57C51C provides a low power alternative to those designs which are committed to a Bipolar PROM footprint. It is a direct drop-in replacement for a Bipolar PROM of the same architecture (16K x 8). No software, hardware or layout changes need be performed.

## BLOCK DIAGRAM

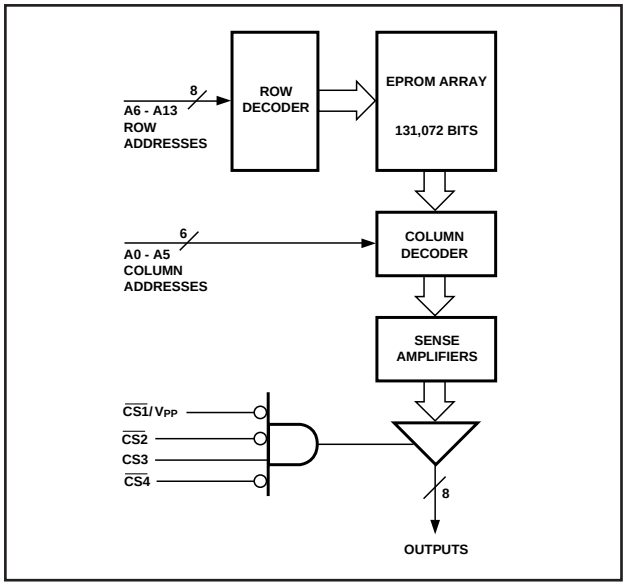


## PIN CONFIGURATION

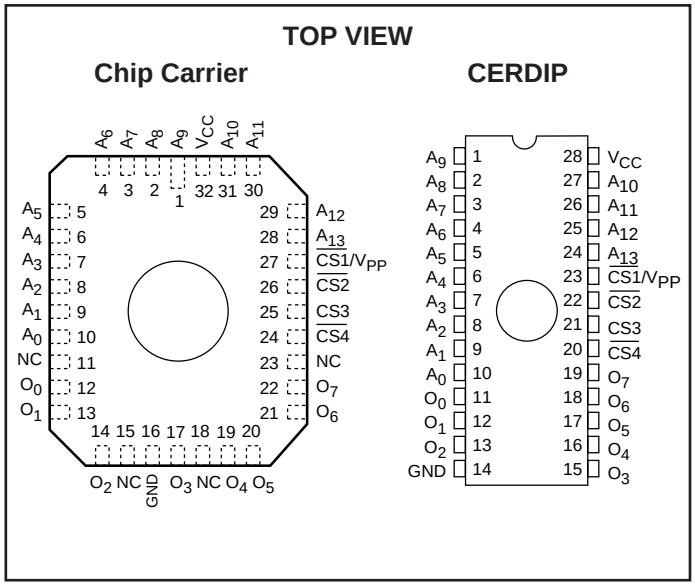


## PRODUCT SELECTION GUIDE

| PARAMETER | 57C51C-35 | 57C51C-45 | 57C51C-55 | 57C51C-70 |
|---|---|---|---|---|
| Address Access Time (Max) | 35 ns | 45 ns | 55 ns | 70 ns |
| CS to Output Valid Time (Max) | 20 ns | 20 ns | 25 ns | 30 ns |

## ABSOLUTE MAXIMUM RATINGS*

Storage Temperature.....–65° to + 150°C

Voltage on any Pin with
Respect to Ground .....–0.6V to +7V

$V_{PP}$ with Respect to Ground.....–0.6V to + 14V

ESD Protection.....>2000V

***NOTICE:**
Stresses above those listed under "Absolute Maximum Ratings" may cause permanent damage to the device. This is a stress rating only and functional operation of the device at these or any other conditions above those indicated in the operational sections of this specification is not implied. Exposure to absolute maximum rating conditions for extended periods of time may affect device reliability.

## MODE SELECTION

| PINS / MODE | $\overline{CS1}$/ $V_{PP}$ | $\overline{CS2}$ | CS3 | $\overline{CS4}$ | $V_{CC}$ | OUTPUTS |
|---|---|---|---|---|---|---|
| Read | $V_{IL}$ | $V_{IL}$ | $V_{IH}$ | $V_{IL}$ | $V_{CC}$ | $D_{OUT}$ |
| Output Disable | $V_{IH}$ | X | X | X | $V_{CC}$ | High Z |
| Output Disable | X | $V_{IH}$ | X | X | $V_{CC}$ | High Z |
| Output Disable | X | X | $V_{IL}$ | X | $V_{CC}$ | High Z |
| Output Disable | X | X | X | $V_{IH}$ | $V_{CC}$ | High Z |
| Program | $V_{PP}$ | $V_{IH}$ | X | X | $V_{CC}$ | $D_{IN}$ |
| Program Verify | $V_{IL}$ | $V_{IL}$ | $V_{IH}$ | $V_{IL}$ | $V_{CC}$ | $D_{OUT}$ |

## OPERATING RANGE

| RANGE | TEMPERATURE | $V_{CC}$ |
|---|---|---|
| Commercial | 0°C to +70°C | +5V ± 10% |
| Industrial | –40°C to +85°C | +5V ± 10% |
| Military | –55°C to +125°C | +5V ± 10% |

## DC READ CHARACTERISTICS Over Operating Range. (See Above)

| SYMBOL | PARAMETER | TEST CONDITIONS | | MIN | MAX | UNITS |
|---|---|---|---|---|---|---|
| $V_{IL}$ | Input Low Voltage | (Note 3) | | –0.1 | 0.8 | V |
| $V_{IH}$ | Input High Voltage | (Note 3) | | 2.0 | $V_{CC}$ + 0.3 | V |
| $V_{OL}$ | Output Low Voltage | $I_{OL}$ = 16 mA | | | 0.4 | V |
| $V_{OH}$ | Output High Voltage | $I_{OH}$ = –4 mA | | 2.4 | | V |
| $I_{CC1}$ | $V_{CC}$ Active Current (CMOS) | $V_{CC}$ = 5.5 V, f = 0 MHz (Note 1), Output Not Loaded Add 4 mA/MHz for AC Operation | Comm'l | | 30 | mA |
| | | | Industrial | | 35 | mA |
| | | | Military | | 35 | mA |
| $I_{CC2}$ | $V_{CC}$ Active Current (TTL) | $V_{CC}$ = 5.5 V, f = 0 MHz (Note 2), Output Not Loaded Add 4 mA/MHz for AC Operation | Comm'l | | 50 | mA |
| | | | Industrial | | 60 | mA |
| | | | Military | | 60 | mA |
| $I_{LI}$ | Input Leakage Current | $V_{IN}$ = 5.5V or Gnd | | –10 | 10 | µA |
| $I_{LO}$ | Output Leakage Current | $V_{OUT}$ = 5.5 V or Gnd | | –10 | 10 | µA |

**NOTES:**
1. CMOS inputs: GND ± 0.3V or $V_{CC}$ ± 0.3V.
2. TTL inputs: $V_{IL} \leq 0.8V$, $V_{IH} \geq 2.0V$.
3. These are absolute voltages with respect to device ground pin and include all overshoots due to system and/or tester noise. Do not attempt to test these values without suitable equipment.

## AC READ CHARACTERISTICS Over Operating Range. (See Above)

| PARAMETER | SYMBOL | 57C51C-35 | | 57C51C-45 | | 57C51C-55 | | 57C51C-70 | | UNITS |
|---|---|---|---|---|---|---|---|---|---|---|
| | | MIN | MAX | MIN | MAX | MIN | MAX | MIN | MAX | |
| Address to Output Delay | $t_{ACC}$ | | 35 | | 45 | | 55 | | 70 | ns |
| $\overline{CS}$ to Output Delay | $t_{CS}$ | | 20 | | 20 | | 25 | | 30 | |
| Output Disable to Output Float* | $t_{DF}$ | | 20 | | 20 | | 25 | | 25 | |
| Address to Output Hold | $t_{OH}$ | 0 | | 0 | | 0 | | 0 | | |

*Sampled, Not 100% Tested.

## AC READ TIMING DIAGRAM

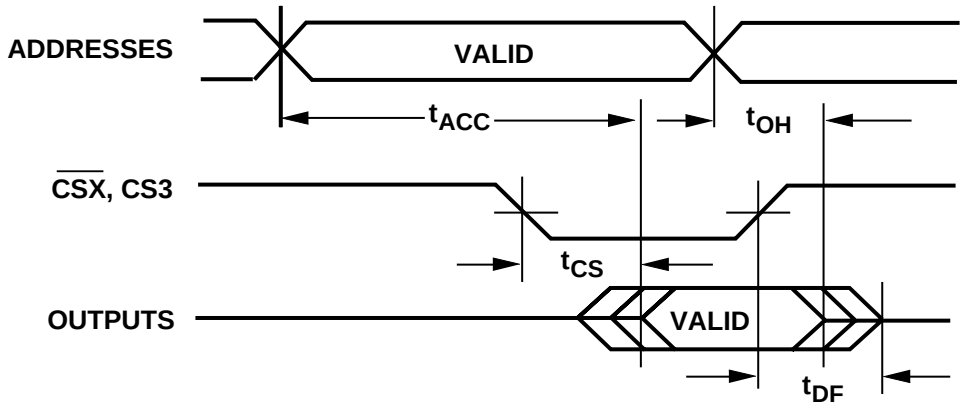

## CAPACITANCE[4] $T_A$ = 25°C, f = 1 MHz

| SYMBOL | PARAMETER | CONDITIONS | TYP[5] | MAX | UNITS |
|---|---|---|---|---|---|
| $C_{IN}$ | Input Capacitance | $V_{IN}$ = 0V | 4 | 6 | pF |
| $C_{OUT}$ | Output Capacitance | $V_{OUT}$ = 0V | 8 | 12 | pF |
| $C_{VPP}$ | $V_{PP}$ Capacitance | $V_{PP}$ = 0 V | 18 | 25 | pF |

**NOTES:** 4. This parameter is only sampled and is not 100% tested.
5.Typical values are for $T_A$ = 25°C and nominal supply voltages.

## TEST LOAD (High Impedance Test Systems)

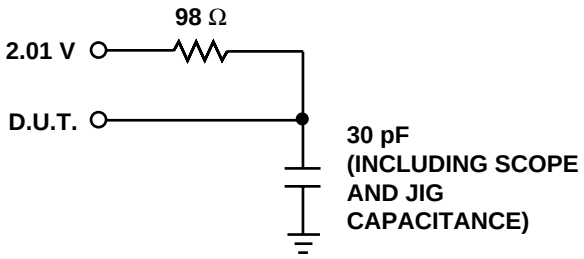


## A.C. TESTING INPUT/OUTPUT WAVEFORM

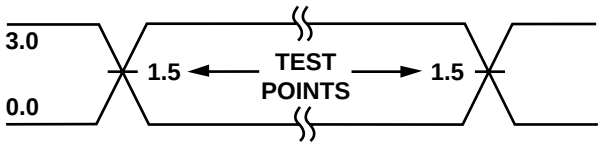


A.C. testing inputs are driven at 3.0 V for a logic "1" and 0.0 V for a logic "0." Timing measurements are made at 1.5 V for input and output transitions in both directions.

**NOTE:** 6. Provide adequate decoupling capacitance as close as possible to this device to achieve the published A.C. and D.C. parameters. A 0.1 microfarad capacitor in parallel with a 0.01 microfarad capacitor connected between $V_{CC}$ and ground is recommended. Inadequate decoupling may result in access time degradation or other transient performance failures.

**NORMALIZED SUPPLY CURRENT vs. SUPPLY VOLTAGE**

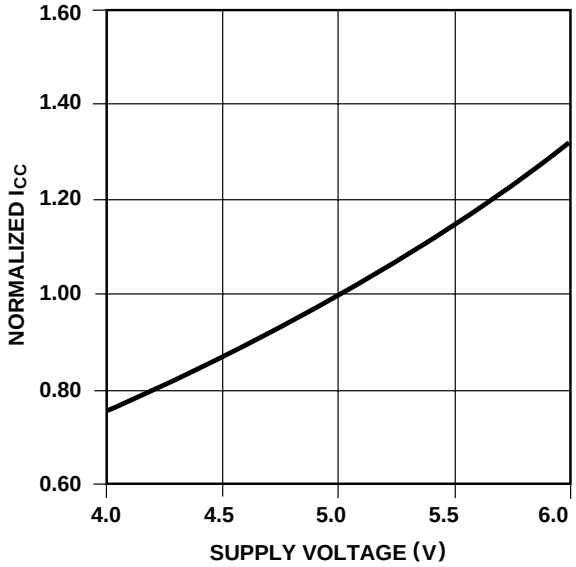


**TYPICAL ACCESS TIME CHANGE vs. OUTPUT LOADING**

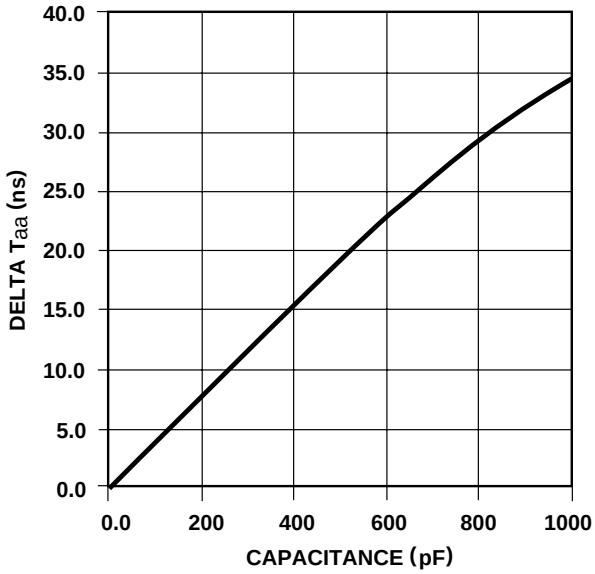


**NORMALIZED $T_{aa}$ vs. AMBIENT TEMPERATURE**

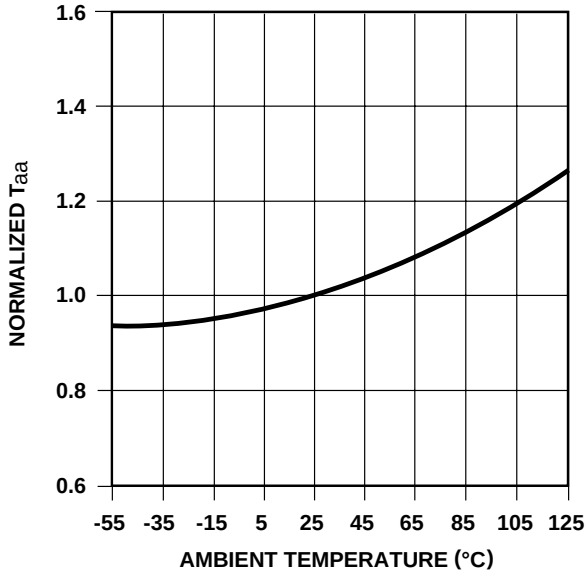


**NORMALIZED SUPPLY CURRENT vs. AMBIENT TEMPERATURE**

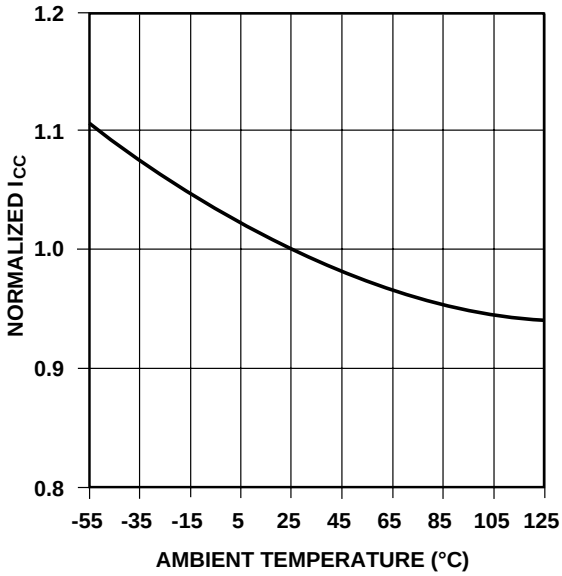

## PROGRAMMING INFORMATION

### DC CHARACTERISTICS ($T_A$ = 25 ± 5°C, $V_{CC}$ = 6.25 V ± 0.25 V, $V_{PP}$ = 12.75 ± 0.25 V)

| SYMBOLS | PARAMETER | MIN | MAX | UNITS |
|---|---|---|---|---|
| $I_{LI}$ | Input Leakage Current ($V_{IN}$ = $V_{CC}$ or Gnd) | –10 | 10 | µA |
| $I_{PP}$ | $V_{PP}$ Supply Current During Programming Pulse | | 60 | mA |
| $I_{CC}$ | $V_{CC}$ Supply Current | | 25 | mA |
| $V_{OL}$ | Output Low Voltage During Verify ($I_{OL}$ = 16 mA) | | 0.45 | V |
| $V_{OH}$ | Output High Voltage During Verify ($I_{OH}$ = –4 mA) | 2.4 | | V |

**NOTE:** 7. $V_{PP}$ must not be greater than 13 volts including overshoot.

### AC CHARACTERISTICS ($T_A$ = 25 ± 5°C, $V_{CC}$ = 6.25 V ± 0.25 V, $V_{PP}$ = 12.75 ± 0.25 V)

| SYMBOLS | PARAMETER | MIN | TYP | MAX | UNITS |
|---|---|---|---|---|---|
| $t_{AS}$ | Address Setup Time | 2 | | | µs |
| $t_{DF}$ | Chip Disable Setup Time | | | 30 | ns |
| $t_{DS}$ | Data Setup Time | 2 | | | µs |
| $t_{PW}$ | Program Pulse Width | 100 | | 200 | µs |
| $t_{DH}$ | Data Hold Time | 2 | | | µs |
| $t_{CS}$ | Chip Select Delay | | | 30 | ns |
| $t_{RF}$ | $V_{PP}$ Rise and Fall Time | 1 | | | µs |

## PROGRAMMING WAVEFORM

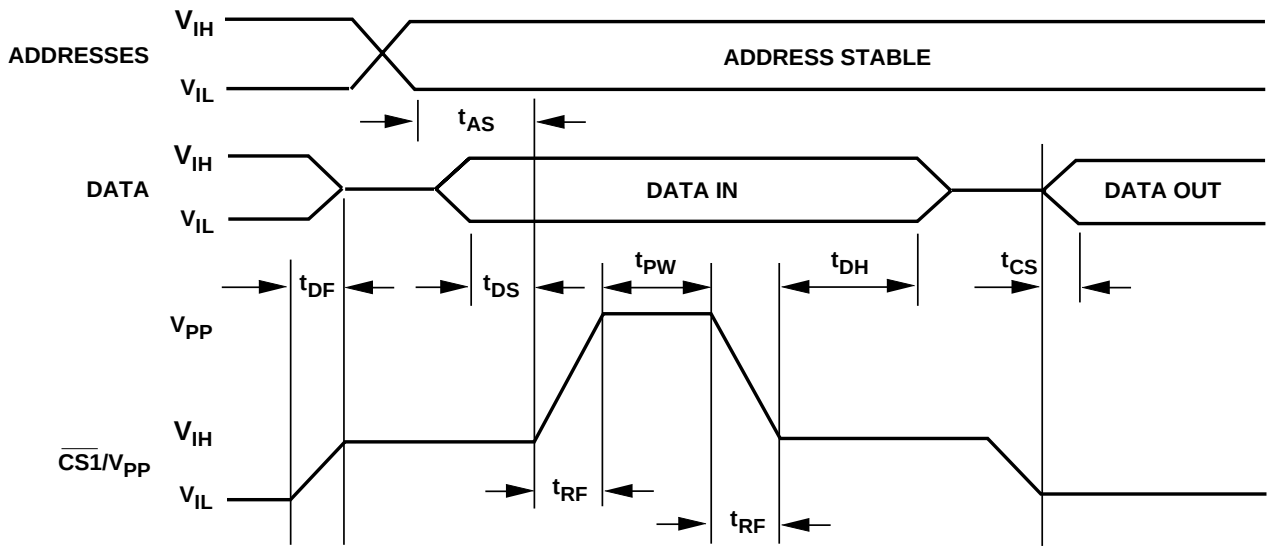

## ORDERING INFORMATION

| PART NUMBER | SPEED (ns) | PACKAGE TYPE | PACKAGE DRAWING | OPERATING TEMPERATURE RANGE | WSI MANUFACTURING PROCEDURE |
|---|---|---|---|---|---|
| WS57C51C-35D | 35 | 28 Pin CERDIP, 0.6" | D2 | Comm'l | Standard |
| WS57C51C-35T | 35 | 28 Pin CERDIP, 0.3" | T2 | Comm'l | Standard |
| WS57C51C-35TI | 35 | 28 Pin CERDIP, 0.3" | T2 | Industrial | Standard |
| WS57C51C-45CMB | 45 | 32 Pad CLLCC | C2 | Military | MIL-STD-883C |
| WS57C51C-45D | 45 | 28 Pin CERDIP, 0.6" | D2 | Comm'l | Standard |
| WS57C51C-45DMB | 45 | 28 Pin CERDIP, 0.6" | D2 | Military | MIL-STD-883C |
| WS57C51C-45J | 45 | 32 Pin PLDCC | J4 | Comm'l | Standard |
| WS57C51C-45JI | 45 | 32 Pin PLDCC | J4 | Industrial | Standard |
| WS57C51C-45L | 45 | 32 Pin CLDCC | L3 | Comm'l | Standard |
| WS57C51C-45T | 45 | 28 Pin CERDIP, 0.3" | T2 | Comm'l | Standard |
| WS57C51C-45TI | 45 | 28 Pin CERDIP, 0.3" | T2 | Industrial | Standard |
| WS57C51C-45TMB | 45 | 28 Pin CERDIP, 0.3" | T2 | Military | MIL-STD-883C |
| WS57C51C-55CMB | 55 | 32 Pad CLLCC | C2 | Military | MIL-STD-883C |
| WS57C51C-55D | 55 | 28 Pin CERDIP, 0.6" | D2 | Comm'l | Standard |
| WS57C51C-55DMB | 55 | 28 Pin CERDIP, 0.6" | D2 | Military | MIL-STD-883C |
| WS57C51C-55J | 55 | 32 Pin PLDCC | J4 | Comm'l | Standard |
| WS57C51C-55JI | 55 | 32 Pin PLDCC | J4 | Industrial | Standard |
| WS57C51C-55L | 55 | 32 Pin CLDCC | L3 | Comm'l | Standard |
| WS57C51C-55T | 55 | 28 Pin CERDIP, 0.3" | T2 | Comm'l | Standard |
| WS57C51C-55TI | 55 | 28 Pin CERDIP, 0.3" | T2 | Industrial | Standard |
| WS57C51C-55TMB | 55 | 28 Pin CERDIP, 0.3" | T2 | Military | MIL-STD-883C |
| WS57C51C-70D | 70 | 28 Pin CERDIP, 0.6" | D2 | Comm'l | Standard |
| WS57C51C-70T | 70 | 28 Pin CERDIP, 0.3" | T2 | Comm'l | Standard |

**NOTES:** 8. The actual part marking will not include the initials "WS."

## PROGRAMMING/ALGORITHMS/ERASURE/PROGRAMMERS

REFER TO PAGE 5-1

The WS57C51C is programmed using Algorithm D shown on page 5-9.

Компания «ЭлектроПласт» предлагает заключение долгосрочных отношений при поставках импортных электронных компонентов на взаимовыгодных условиях!

Наши преимущества:

- Оперативные поставки широкого спектра электронных компонентов отечественного и импортного производства напрямую от производителей и с крупнейших мировых складов;
- Поставка более 17-ти миллионов наименований электронных компонентов;
- Поставка сложных, дефицитных, либо снятых с производства позиций;
- Оперативные сроки поставки под заказ (от 5 рабочих дней);
- Экспресс доставка в любую точку России;
- Техническая поддержка проекта, помощь в подборе аналогов, поставка прототипов;
- Система менеджмента качества сертифицирована по Международному стандарту ISO 9001;
- Лицензия ФСБ на осуществление работ с использованием сведений, составляющих государственную тайну;
- Поставка специализированных компонентов (Xilinx, Altera, Analog Devices, Intersil, Interpoint, Microsemi, Aeroflex, Peregrine, Syfer, Eurofarad, Texas Instrument, Miteq, Cobham, E2V, MA-COM, Hittite, Mini-Circuits,General Dynamics и др.);

Помимо этого, одним из направлений компании «ЭлектроПласт» является направление «Источники питания». Мы предлагаем Вам помощь Конструкторского отдела:

- Подбор оптимального решения, техническое обоснование при выборе компонента;
- Подбор аналогов;
- Консультации по применению компонента;
- Поставка образцов и прототипов;
- Техническая поддержка проекта;
- Защита от снятия компонента с производства.

**Как с нами связаться**

**Телефон:** 8 (812) 309 58 32 (многоканальный)
**Факс:** 8 (812) 320-02-42
**Электронная почта:** org@eplast1.ru
**Адрес:** 198099, г. Санкт-Петербург, ул. Калинина, дом 2, корпус 4, литера А.