40Pin Flash Disk Module Min.8MB ~ Max.512MB, True IDE Interface Mode, 3.3V / 5.0V Operating Part No. HFDOM40B-xxxSx

1. PRODUCT OVERVIEW

GENERAL DESCRIPTION

The HFDOM40B-xxxSx series 40Pin Flash Disk Module is a flash technology based with True IDE interface flash memory card. It is constructed with flash disk controller chip and NAND-type (Samsung) flash memory device. The HFDOM40B-xxxSx series operates in both 3.3-Volt and 5.0-Volt power supplies. It comes in capacity of 8, 16, 32, 64, 128, 192, 256 MB and up to 512 MB formatted 40Pin type .

By optimizing flash memory management, the life of this HFDOM40B-xxxSx series can be extended to its maximum level. Because the ECC function is included, the correctness of data transfer between the HFDOM40B-xxxSx series and a True IDE compatible interface device can be guaranteed.

The HFDOM40B-xxxSx series is fully compatible with applications such as CPU card / board, set top box, industry / military PC / Notebook, security equipment, measuring instrument and embedded systems.

FEATURES

- True IDE compatible host interface
- Direct plug in for 3.5″ IDE Connectors
- 40 pin 2.54mm IDE Connector
- Very high performance, very low power consumption
- Automatic error correction
- Support 3 power save mode : stop/idle/active
- Support for CIS implemented with 256 bytes of attribute memory
- 3.3V/5.0V operation voltage
- Host data transfer rate : 20MB/s
- Flash data transfer rate : 10MB/s
- Host Interface bus width : 8/16 bit Access
- Flash Interface bus width : 8 bit Access
- Capacity : Min. 8MB ~ Max. 384MB
- MTBF : 1,000,000 hours, minimum 30,000 insertions
- Operating vibration : 15G peak to peak maximum
- Operating shock : 1,000G maximum

PRODUCT SPECIFICATIONS

Capacities :

8, 16, 32, 64, 128, 192, 256 and up to 512 MB (formatted)

Operating Voltage : 3.3V / 5.0V ±10%

Power consumptions :

Read mode	30 mA (typ), 50 Ma (Max)
Write mode	30 mA (typ), 70 Ma (Max)
Stop mode	30 uA (typ)

Environment conditions :

Operating temperature	0°C to + 60°C
Storage temperature	- 25°C to + 85°C
Relative humidity	95%(Max)

Mechanical conditions :

Weight : Maximum 9.0g

ELECTRICAL SPECIFICATIONS

Table 1.1 Absolute Maximum Ratings

Symbol	Parameter	Ratings	Unit
V_{DD}	Supply voltage	- 0.3 to + 7.0	V
V_{IN}	Input voltage	- 0.3 to + 7.0	V
I_{IN}	DC input current	- 10	mA
T_{STG}	Storage temperature	- 20 to + 85	°C

Table 1.2 Recommended Operating Conditions

Symbol	Parameter		Ratings	Unit
V_{DD}	DC Supply voltage	5V	4.75 to 5.25	V
		3.3V	3.0 to 3.6	V
T_a	Storage temperature		- 20 to +70	°C

Table 1.3 DC Characteristics

(Ta=0°C to 70°C, V_{DD}=3.0 to 5.3V)

Symbol	Parameter	Min.	Typ.	Max.	Unit
I_{DD}	Operating Current		30	70	mA
I_{ds}	Stop Current		50	150	μA
V_{DD}	High Level Output Voltage	2.4			V
V_{DD}	Low Level Output Voltage			0.4	V

CAPACITY SPECIFICATIONS

Table 1.4 Capacity Specifications

Part Number	Capacity (*Unformatted*)	Total Sector	Cylinders	Heads	Sectors
HFDOM40B-016Sx	*15,990,784* ***bytes***	31,232	61	16	32
HFDOM40B-032Sx	*32,243,712* ***bytes***	62,976	123	16	32
HFDOM40B-064Sx	*65,536,000* ***bytes***	128,000	250	16	32
HFDOM40B-128Sx	*131,858,432* ***bytes***	257,536	503	16	32
HFDOM40B-192Sx	*196,608,000* ***bytes***	384,000	750	16	32
HFDOM40B-256Sx	*265,027,584* ***bytes***	517,632	1011	16	32
HFDOM40B-384Sx	*395,837,440* ***bytes***	773,120	1510	16	32
HFDOM40B-512Sx	*531,890,176* ***bytes***	1,038,848	2029	16	32

PHYSYCAL SPECIFICATIONS

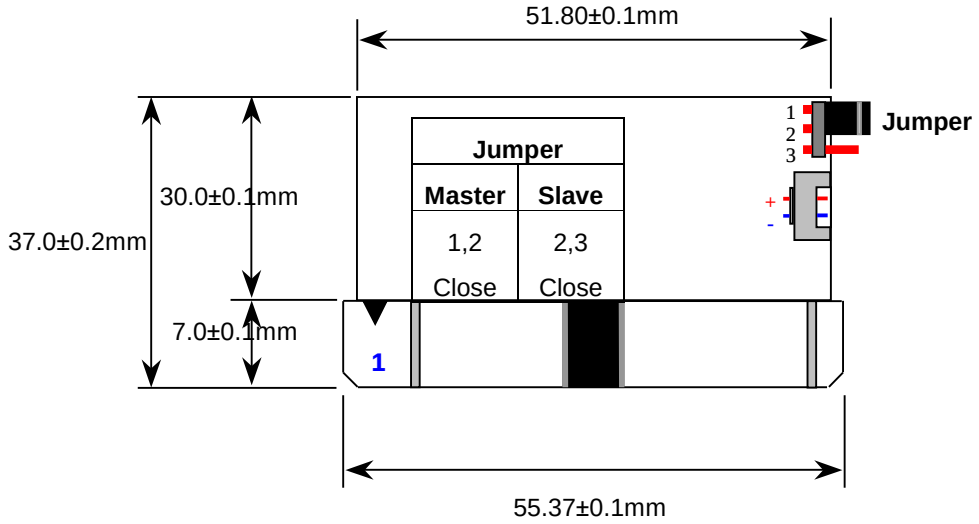

< View from front side >

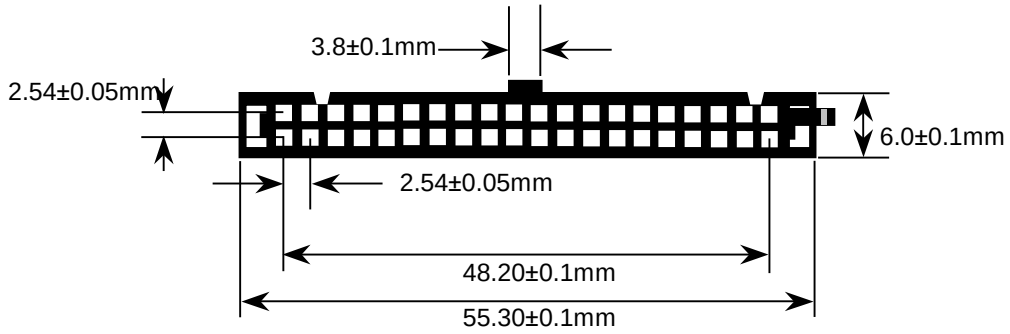

< View from connector side >

Figure 1.1 40 pin Type Flash Disk Module Dimensions

INSTALLTION GUIDE

1) Setting Method

① Make sure your computer is turned off before you open the case.

② Plug the carefully into the 40pin IDE slot on your computer.
Caution: Make sure to align pin1 on host adapter interface connector with pin 1 on your Flash Disk Module. Pin 1 is indicated by a triangle on the Flash Disk Module connector.

③ The Flash Disk Module is used power connector cable of the computer.
Caution: If you need to remove your Flash Disk Module, use both hands to pull it out carefully.

④ Check all cable connections and then replace your computer cover.

2) BIOS setting Method

Before you format or partition your new drive, you must configure your computer's BIOS so that the computer can recognize your new drive.

① Turn your computer on. As your computer start up, watch the screen for a message describing how to run the system setup program on the screen (sometimes called BIOS or CMOS setup). This is usually done by pressing a special key, such as **Delete**, **Esc** or **F1** during startup. See your computer manual for details. Press the appropriate key to run the system setup program.

② ***If your BIOS provides automatic drive detection (an "AUTO" drive type), select this option.*** (**We recommend to use Normal / CHS mode to partition your Flash Disk Module to get the maximum formatted capacity.**)
This allows your computer to configure itself automatically for your new drive.
If your BIOS dose not provide "AUTO" drive detection, select "User-defined" drive setting and enter the CHS values from the table. BIOS Settings (see specification) Capacity Cylinders Heads Sectors(unformatted)

③ Save the settings and exit the System Setup program. (your computer will automatically reboot) After you configure your computer, you can use the standard DOS commands to partition and format your Flash Disk Module, as described below.

3) Formatting Method

To partition your new Flash Disk Module with Microsoft DOS program :

① Insert a bootable DOS diskette into your diskette drive and restart your computer.

② Insert a DOS program diskette that contains the **FDISK.EXE** and **FORMAT.COM** programs into your diskette drive. Use the same DOS version that is on your bootable diskette. At the **A:\ >** prompt, type **"FDISK"** and press **Enter**.

③ Select **"Create DOS partition or logical DOS drive"** by pressing **1**. Then press **Enter**.

④ Select **"Create primary DOS partition"** by pressing **1** again. Then press **Enter**.
Create your first drive partition. If you are creating a partition that will be used to boot your computer (drive C), make sure that the partition is marked active.

⑤ Create an extended partition and additional logical drives as necessary, until all the space on your new hard drive has been partitioned.

⑥ When the partitioning is complete, **FDISK** reboots your computer.
Caution: Make sure to use the correct drive letters so that you do not format a drive that already contains data.

⑦ At the **A:\ >** prompt, type **"format c:/s"**, where **c** is the letter of your first new partition, Repeat the format process for all the new partitions you have created.

⑧ After you format your drive, it is ready to use.

2. PIN INFORMATION

PIN ASSIGNMENTS AND PIN TYPE

Table 2.1 Pin Assignment and Pin type

Pin	Signal	Pin Type	Pin	Signal	Pin Type
1	/RESET	I	**2**	GND	Ground
3	D07	I/O	**4**	D08	I/O
5	D06	I/O	**6**	D09	I/O
7	D05	I/O	**8**	D10	I/O
9	D04	I/O	**10**	D11	I/O
11	D03	I/O	**12**	D12	I/O
13	D02	I/O	**14**	D13	I/O
15	D01	I/O	**16**	D14	I/O
17	D00	I/O	**18**	D15	I/O
19	GND	DC	**20**	Key Pin	--
21	Reserved	--	**22**	GND	Ground
23	/IOW	I	**24**	GND	Ground
25	/IOR	I	**26**	GND	Ground
27	IORDY	O	**28**	Reserved	--
29	Reserved	--	**30**	GND	Ground
31	IRQ	O	**32**	/IOIS16	O
33	A01	I	**34**	/PDIAG	I/O
35	A00	I	**36**	A02	I
37	/CS0	I	**38**	/CS1	I
39	/DASP(**LED)**	I/O	**40**	GND	Ground

Signal Descriptions

Table 2.2 Signal Descriptions

Signal Name	Dir.	Pin	Description
A[2:0]	I	33,35,36	In True IDE Mode only A[2:0] are used to select the one of eight registers in the Task File, the remaining address lines should be grounded by the host.
-PDIAG	I/O	34	This input / output is the Pass Diagnostic signal in the Master / Slave handshake protocol.
-DASP(**LED**)	I/O	39	This signal used either to drive an **LED** whenever the Disk Module is being accessed or as indication of a second drive present. This signal is active low when the Disk Module is busy.
-CS0, -CS1	I	37,38	CS0 is the chip select for the task file registers while CS2 is used to select the Alternate Status Register and the Device Control Register.
D[15:00]	I/O	3,4,5,6, 7,8,9,10, 11,12,13, 14,15,16, 17,18	All Task File operations occur in byte mode on the low order bus D00-D07 while all data transfers are 16 bit using D00-D15.
GND	--	2,19,22, 24,26, 30,40,	Ground.
-IOR	I	25	This is an I/O Read strobe generated by the host.
-IOW	I	23	The I/O Write strobe pulse is used to clock I/O data on the Card Data bus into the Storage Card controller registers when the Storage Card is configured to use the I/O interface. The clocking will occur on the negative to positive edge of the signal (trailing edge).
IRQ	O	31	In True IDE Mode signal is the active high Interrupt Request to the host.
-RESET	I	1	This input pin is the active low hardware reset from the host.
IORDY	O	27	This output signal may be used as IORDY.
-IOIS16	O	32	This output signal is asserted low when this device is expecting a word data transfer cycle.

BLOCK DIAGRAM

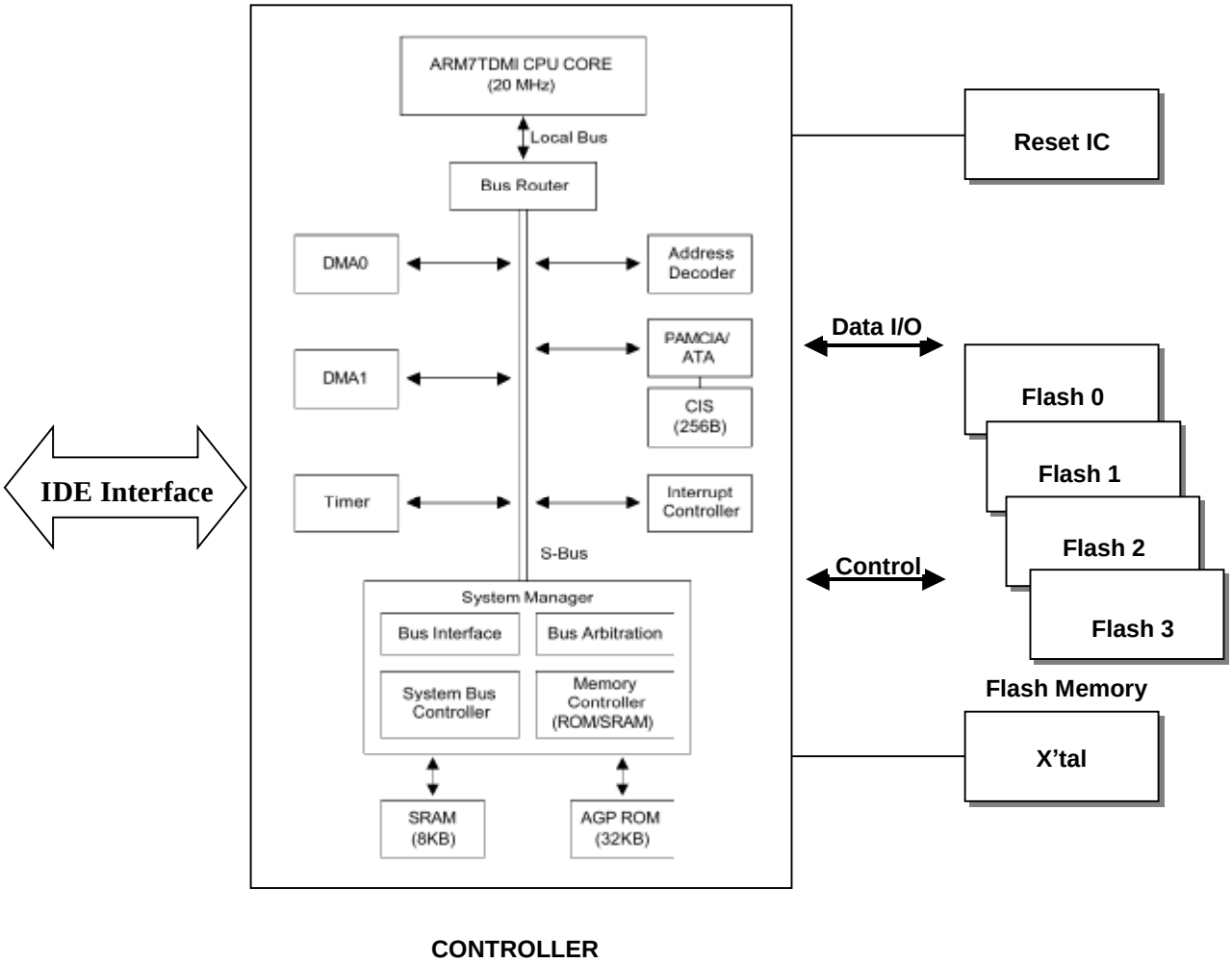

Figure 2.1 Flash Disk Module Block Diagram

3. INTERFACE BUS TIMING

ACCESS SPCIFICATIONS

IDE MODE I/O ACCESS SPECIFICATIONS

In this True IDE Mode the Flash Disk Module protocol and configuration are disabled and only I/O operations to the Task File and Data Register are allowed. In this mode no Memory or Attribute Registers are accessible to the host.

Table 3.1 IDE Mode I/O Access Mode

Mode	-CE2	-CE1	A2-A0	-IORD	-IOWR	D15 - D8	D7 – D0
Invalid Mode	L	L	x	x	x	High Z	High Z
Standby Mode	H	H	x	x	x	High Z	High Z
Task File Write	H	L	1-7h	H	L	Don't Care	Data In
Task File Read	H	L	1-7h	L	H	High Z	Data Out
Data Register Write	H	L	0	H	L	Odd Byte in	Even Byte in
Data Register Read	H	L	0	L	H	Odd Byte out	Even Byte out
Control Register Write	L	H	6h	H	L	Don't Care	Control In
All Status Read	L	H	6h	L	H	High Z	Status Out

Table 3.2 IDE Mode I/O Read Timing

Parameter	Symbol	IEEE Symbol	Min. ns	Max. ns
Data Delay after IORD	td (IORD)	tIGLQV		100
Data Hold following IORD	th (IORD)	tIGHQX	0	
IORD Width Time	tw (IORD)	tIGLIGH	165	
Address Setup before IORD	tsuA (IORD)	tAVIGL	70	
Address Hold following IORD	thA (IORD)	tIGHAX	20	
CE Setup before IORD	tsuCE (IORD)	tELIGL	5	
CE Hold following IORD	thCE (IORD)	tIGHEH	20	
IOIS16 Delay Falling from Address	tdfIOIS16 (ADR)	tAVISL		35
IOIS16 Delay Rising from Address	tdrIOIS16 (ADR)	tAVISH		35

NOTE: The maximum load on -IOIS16 is 1 LSTTL with 50pF total load. All times are in nanoseconds. Minimum time from
–WAIT high to -IORD high is 0nsec, but minimum -IORD width must still be met.

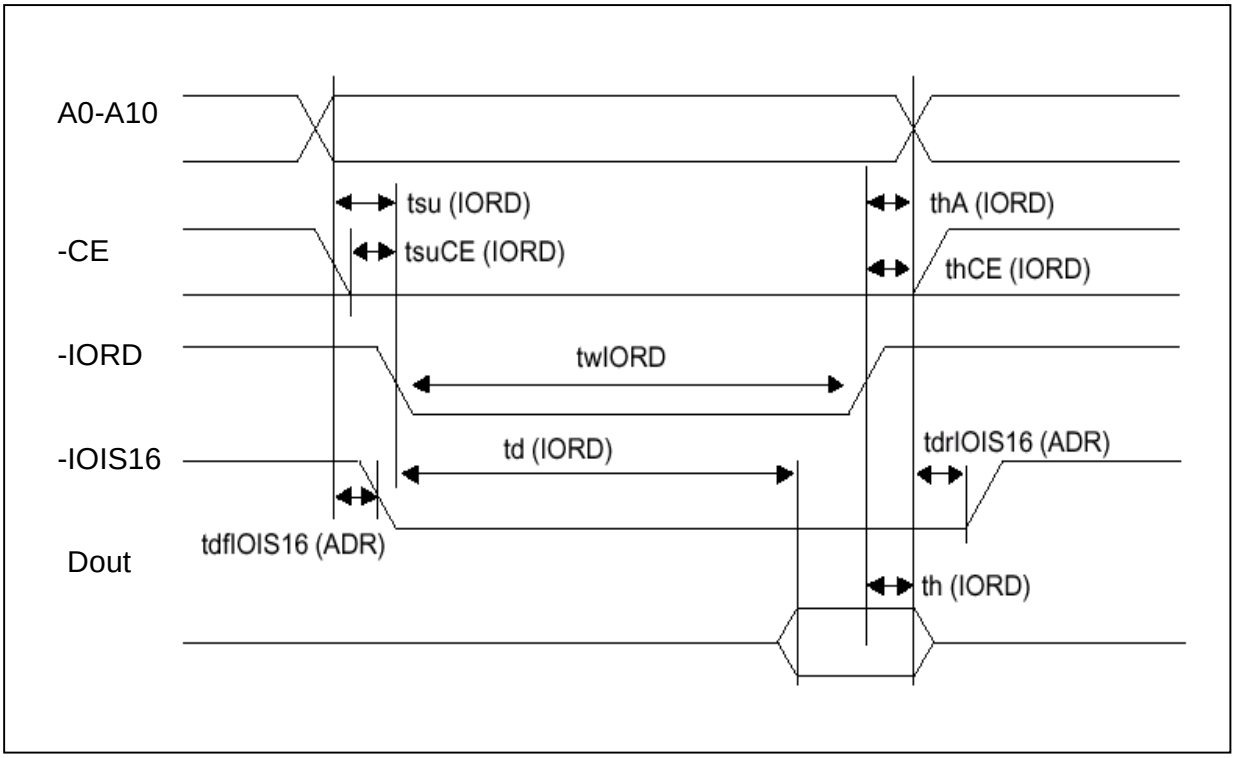

Figure 3.1 IDE Mode I/O Read Timing Example

Table 3.3 IDE Mode I/O Write Timing

Parameter	Symbol	IEEE Symbol	Min. ns	Max. ns
Data Setup before IOWR	tsu(IOWR)	tDVIWH	60	
Data Hold following IOWR	th(IOWR)	tIWHDX	30	
IOWR Width Time	twI(OWR)	tIWLIWH	165	
Address Setup before IOWR	tsuA(IOWR)	tAVIWL	70	
Address Hold following IOWR	thA(IOWR)	tIWHAX	20	
CE Setup before IOWR	tsuCE(IOWR)	tELIWL	5	
CE Hold following IOWR	thCE(IOWR)	tIWHEH	20	
IOIS16 Delay Falling from Address	tdfIOIS16(ADR)	tAVISL		35
IOIS16 Delay Rising from Address	tdrIOIS16(ADR)	tAVISH		35

NOTE: The maximum load on -IOIS16 is 1 LSTTL with 50pF total load. All times are in nanoseconds. Minimum time from
-WAIT high to -IOWR high is 0nsec, but minimum -IOWR width must still be met.

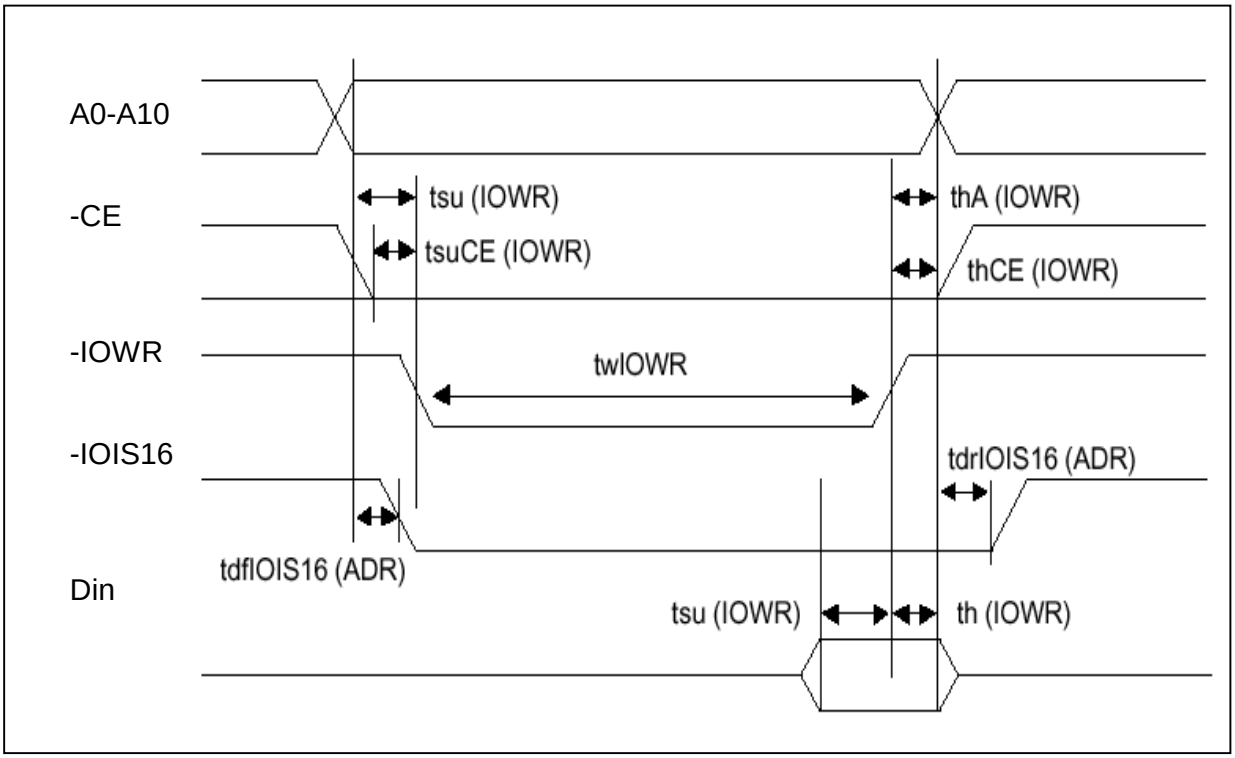

Figure 3.2 IDE Mode I/O Write Timing Example

Ordering Infomation

NO	Parts	Size	Capacity	Media transfer mode	Chip Number	Operation Mode
1	**HFDOM40B-016S1**	55.3x29.0x0.8mm	16Mbyte	BYTE	1	True IDE
2	**HFDOM40B-032S1**	55.3x29.0x0.8mm	32Mbyte	BYTE	1	True IDE
3	**HFDOM40B-032S2**	55.3x29.0x0.8mm		BYTE	2	True IDE
4	**HFDOM40B-064S1**	55.3x29.0x0.8mm	64Mbyte	BYTE	1	True IDE
5	**HFDOM40B-064S2**	55.3x29.0x0.8mm		BYTE	2	True IDE
6	**HFDOM40B-128S1**	55.3x29.0x0.8mm	128Mbyte	BYTE	1	True IDE
7	**HFDOM40B-128S2**	55.3x29.0x0.8mm		BYTE	2	True IDE
8	**HFDOM40B-192S3**	55.3x29.0x0.8mm	192Mbyte	BYTE	3	True IDE
9	**HFDOM40B-256S2**	55.3x29.0x0.8mm	256Mbyte	BYTE	2	True IDE
10	**HFDOM40B-384S3**	55.3x29.0x0.8mm	384Mbyte	BYTE	3	True IDE
11	**HFDOM40B-512S4**	55.3x29.0x0.8mm	512Mbyte	BYTE	4	True IDE

Компания «ЭлектроПласт» предлагает заключение долгосрочных отношений при поставках импортных электронных компонентов на взаимовыгодных условиях!

Наши преимущества:

- Оперативные поставки широкого спектра электронных компонентов отечественного и импортного производства напрямую от производителей и с крупнейших мировых складов;
- Поставка более 17-ти миллионов наименований электронных компонентов;
- Поставка сложных, дефицитных, либо снятых с производства позиций;
- Оперативные сроки поставки под заказ (от 5 рабочих дней);
- Экспресс доставка в любую точку России;
- Техническая поддержка проекта, помощь в подборе аналогов, поставка прототипов;
- Система менеджмента качества сертифицирована по Международному стандарту ISO 9001;
- Лицензия ФСБ на осуществление работ с использованием сведений, составляющих государственную тайну;
- Поставка специализированных компонентов (Xilinx, Altera, Analog Devices, Intersil, Interpoint, Microsemi, Aeroflex, Peregrine, Syfer, Eurofarad, Texas Instrument, Miteq, Cobham, E2V, MA-COM, Hittite, Mini-Circuits,General Dynamics и др.);

Помимо этого, одним из направлений компании «ЭлектроПласт» является направление «Источники питания». Мы предлагаем Вам помощь Конструкторского отдела:

- Подбор оптимального решения, техническое обоснование при выборе компонента;
- Подбор аналогов;
- Консультации по применению компонента;
- Поставка образцов и прототипов;
- Техническая поддержка проекта;
- Защита от снятия компонента с производства.

Как с нами связаться

Телефон: 8 (812) 309 58 32 (многоканальный)
Факс: 8 (812) 320-02-42
Электронная почта: org@eplast1.ru
Адрес: 198099, г. Санкт-Петербург, ул. Калинина, дом 2, корпус 4, литера А.