Please note that Cypress is an Infineon Technologies Company.

The document following this cover page is marked as “Cypress” document as this is the company that originally developed the product. Please note that Infineon will continue to offer the product to new and existing customers as part of the Infineon product portfolio.

Continuity of document content

The fact that Infineon offers the following product as part of the Infineon product portfolio does not lead to any changes to this document. Future revisions will occur when appropriate, and any changes will be set out on the document history page.

Continuity of ordering part numbers

Infineon continues to support existing part numbers. Please continue to use the ordering part numbers listed in the datasheet for ordering.

CY7C2268KV18/CY7C2270KV18

36-Mbit DDR II+ SRAM Two-Word Burst Architecture (2.5 Cycle Read Latency) with ODT

Features

- 36-Mbit density (2M × 18, 1M × 36)
- 550 MHz clock for high bandwidth
- Two-word burst for reducing address bus frequency
- Double data rate (DDR) interfaces (data transferred at 1100 MHz) at 550 MHz
- Available in 2.5 clock cycle latency
- Two input clocks (K and $\overline{K}$) for precise DDR timing
  - SRAM uses rising edges only
- Echo clocks (CQ and $\overline{CQ}$) simplify data capture in high speed systems
- Data valid pin (QVLD) to indicate valid data on the output
- On-die termination (ODT) feature
  - Supported for $D_{[x:0]}$, $BWS_{[x:0]}$, and K/$\overline{K}$ inputs
- Synchronous internally self-timed writes
- DDR II+ operates with 2.5 cycle read latency when $\overline{DOFF}$ is asserted HIGH
- Operates similar to DDR I device with 1 cycle read latency when $\overline{DOFF}$ is asserted LOW
- Core V_{DD} = 1.8 V ± 0.1 V; I/O V_{DDQ} = 1.4 V to V_{DD}[1]
  - Supports both 1.5 V and 1.8 V I/O supply
- HSTL inputs and variable drive HSTL output buffers
- Available in 165-ball FBGA package (13 × 15 × 1.4 mm)
- Offered in both Pb-free and non Pb-free packages
- JTAG 1149.1 compatible test access port
- Phase-locked loop (PLL) for accurate data placement

Configurations

With Read Cycle Latency of 2.5 Cycles:

CY7C2268KV18 – 2M × 18

CY7C2270KV18 – 1M × 36

Functional Description

The CY7C2268KV18, and CY7C2270KV18 are 1.8 V synchronous pipelined SRAMs equipped with DDR II+ architecture. The DDR II+ consists of an SRAM core with advanced synchronous peripheral circuitry. Addresses for read and write are latched on alternate rising edges of the input (K) clock. Write data is registered on the rising edges of both K and $\overline{K}$. Read data is driven on the rising edges of K and $\overline{K}$. Each address location is associated with two 18-bit words (CY7C2268KV18), or 36-bit words (CY7C2270KV18) that burst sequentially into or out of the device.

These devices have an on-die termination feature supported for $D_{[x:0]}$, $BWS_{[x:0]}$, and K/$\overline{K}$ inputs, which helps eliminate external termination resistors, reduce cost, reduce board area, and simplify board routing.

Asynchronous inputs include an output impedance matching input (ZQ). Synchronous data outputs (Q, sharing the same physical pins as the data inputs D) are tightly matched to the two output echo clocks CQ/$\overline{CQ}$, eliminating the need for separately capturing data from each individual DDR SRAM in the system design.

All synchronous inputs pass through input registers controlled by the K or $\overline{K}$ input clocks. All data outputs pass through output registers controlled by the K or $\overline{K}$ input clocks. Writes are conducted with on-chip synchronous self-timed write circuitry.

For a complete list of related documentation, click here.

Selection Guide

Description		550 MHz	450 MHz	400 MHz	Unit
Maximum operating frequency		550	450	400	MHz
Maximum operating current	× 18	700	600	Not Offered	mA
	× 36	890	Not Offered	690	

Note
1. The Cypress QDR II+ devices surpass the QDR consortium specification and can support V_{DDQ} = 1.4 V to V_{DD}.

Logic Block Diagram – CY7C2268KV18

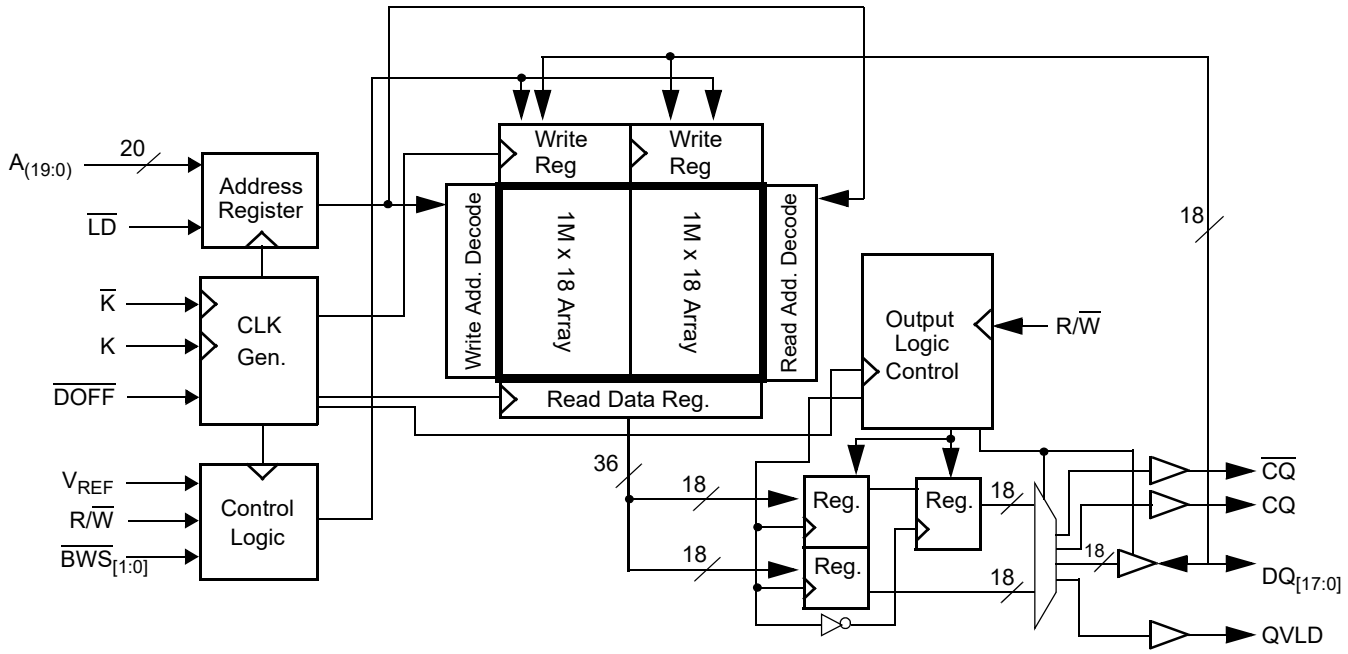

Logic Block Diagram – CY7C2270KV18

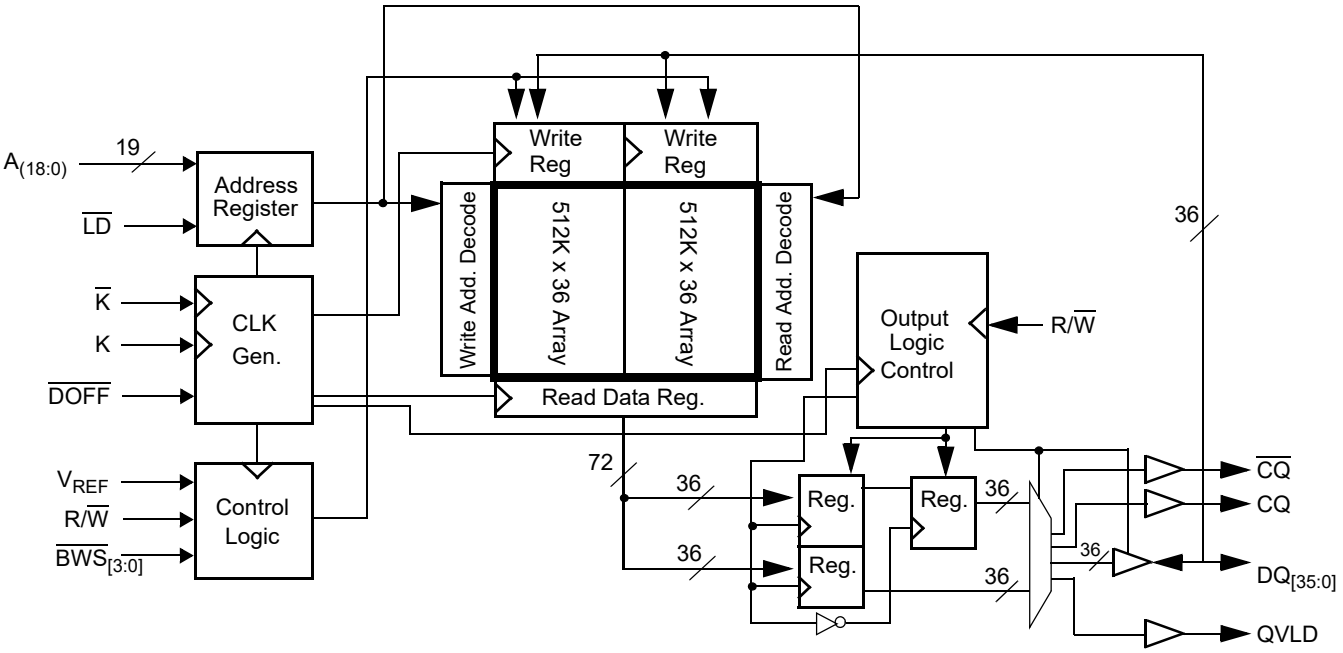

Contents

Pin Configurations **4**
Pin Definitions **5**
Functional Overview **6**
Read Operations 6
Write Operations 6
Byte Write Operations 6
DDR Operation 7
Depth Expansion 7
Programmable Impedance 7
Echo Clocks 7
Valid Data Indicator (QVLD) 7
On-Die Termination (ODT) 7
PLL 7
Application Example **8**
Truth Table **9**
Write Cycle Descriptions **9**
Write Cycle Descriptions **10**
IEEE 1149.1 Serial Boundary Scan (JTAG) **11**
Disabling the JTAG Feature 11
Test Access Port 11
Performing a TAP Reset 11
TAP Registers 11
TAP Instruction Set 11
TAP Controller State Diagram **13**
TAP Controller Block Diagram **14**
TAP Electrical Characteristics **14**
TAP AC Switching Characteristics **15**
TAP Timing and Test Conditions **16**
Identification Register Definitions **17**
Scan Register Sizes **17**
Instruction Codes **17**
Boundary Scan Order **18**
Power Up Sequence in DDR II+ SRAM **19**
Power Up Sequence 19
PLL Constraints 19
Maximum Ratings **20**
Operating Range **20**
Neutron Soft Error Immunity **20**
Electrical Characteristics **20**
DC Electrical Characteristics 20
AC Electrical Characteristics 22
Capacitance **22**
Thermal Resistance **22**
AC Test Loads and Waveforms **22**
Switching Characteristics **23**
Switching Waveforms **25**
Read/Write/Deselect Sequence 25
Ordering Information **26**
Ordering Code Definitions 26
Package Diagram **27**
Acronyms **28**
Document Conventions **28**
Units of Measure 28
Document History Page **29**
Sales, Solutions, and Legal Information **31**
Worldwide Sales and Design Support 31
Products 31
PSoC® Solutions 31
Cypress Developer Community 31
Technical Support 31

Pin Configurations

The pin configuration for CY7C2268KV18, and CY7C2270KV18 follow. [2]

Figure 1. 165-ball FBGA (13 × 15 × 1.4 mm) pinout

CY7C2268KV18 (2M × 18)

	1	2	3	4	5	6	7	8	9	10	11
A	$\overline{CQ}$	NC/72M	A	R/$\overline{W}$	$\overline{BWS_1}$	$\overline{K}$	NC/144M	$\overline{LD}$	A	A	CQ
B	NC	DQ9	NC	A	NC/288M	K	$\overline{BWS_0}$	A	NC	NC	DQ8
C	NC	NC	NC	V_{SS}	A	NC	A	V_{SS}	NC	DQ7	NC
D	NC	NC	DQ10	V_{SS}	V_{SS}	V_{SS}	V_{SS}	V_{SS}	NC	NC	NC
E	NC	NC	DQ11	V_{DDQ}	V_{SS}	V_{SS}	V_{SS}	V_{DDQ}	NC	NC	DQ6
F	NC	DQ12	NC	V_{DDQ}	V_{DD}	V_{SS}	V_{DD}	V_{DDQ}	NC	NC	DQ5
G	NC	NC	DQ13	V_{DDQ}	V_{DD}	V_{SS}	V_{DD}	V_{DDQ}	NC	NC	NC
H	$\overline{DOFF}$	V_{REF}	V_{DDQ}	V_{DDQ}	V_{DD}	V_{SS}	V_{DD}	V_{DDQ}	V_{DDQ}	V_{REF}	ZQ
J	NC	NC	NC	V_{DDQ}	V_{DD}	V_{SS}	V_{DD}	V_{DDQ}	NC	DQ4	NC
K	NC	NC	DQ14	V_{DDQ}	V_{DD}	V_{SS}	V_{DD}	V_{DDQ}	NC	NC	DQ3
L	NC	DQ15	NC	V_{DDQ}	V_{SS}	V_{SS}	V_{SS}	V_{DDQ}	NC	NC	DQ2
M	NC	NC	NC	V_{SS}	V_{SS}	V_{SS}	V_{SS}	V_{SS}	NC	DQ1	NC
N	NC	NC	DQ16	V_{SS}	A	A	A	V_{SS}	NC	NC	NC
P	NC	NC	DQ17	A	A	QVLD	A	A	NC	NC	DQ0
R	TDO	TCK	A	A	A	ODT	A	A	A	TMS	TDI

CY7C2270KV18 (1M × 36)

	1	2	3	4	5	6	7	8	9	10	11
A	$\overline{CQ}$	NC/144M	A	R/$\overline{W}$	$\overline{BWS_2}$	$\overline{K}$	$\overline{BWS_1}$	$\overline{LD}$	A	NC/72M	CQ
B	NC	DQ27	DQ18	A	$\overline{BWS_3}$	K	$\overline{BWS_0}$	A	NC	NC	DQ8
C	NC	NC	DQ28	V_{SS}	A	NC	A	V_{SS}	NC	DQ17	DQ7
D	NC	DQ29	DQ19	V_{SS}	V_{SS}	V_{SS}	V_{SS}	V_{SS}	NC	NC	DQ16
E	NC	NC	DQ20	V_{DDQ}	V_{SS}	V_{SS}	V_{SS}	V_{DDQ}	NC	DQ15	DQ6
F	NC	DQ30	DQ21	V_{DDQ}	V_{DD}	V_{SS}	V_{DD}	V_{DDQ}	NC	NC	DQ5
G	NC	DQ31	DQ22	V_{DDQ}	V_{DD}	V_{SS}	V_{DD}	V_{DDQ}	NC	NC	DQ14
H	$\overline{DOFF}$	V_{REF}	V_{DDQ}	V_{DDQ}	V_{DD}	V_{SS}	V_{DD}	V_{DDQ}	V_{DDQ}	V_{REF}	ZQ
J	NC	NC	DQ32	V_{DDQ}	V_{DD}	V_{SS}	V_{DD}	V_{DDQ}	NC	DQ13	DQ4
K	NC	NC	DQ23	V_{DDQ}	V_{DD}	V_{SS}	V_{DD}	V_{DDQ}	NC	DQ12	DQ3
L	NC	DQ33	DQ24	V_{DDQ}	V_{SS}	V_{SS}	V_{SS}	V_{DDQ}	NC	NC	DQ2
M	NC	NC	DQ34	V_{SS}	V_{SS}	V_{SS}	V_{SS}	V_{SS}	NC	DQ11	DQ1
N	NC	DQ35	DQ25	V_{SS}	A	A	A	V_{SS}	NC	NC	DQ10
P	NC	NC	DQ26	A	A	QVLD	A	A	NC	DQ9	DQ0
R	TDO	TCK	A	A	A	ODT	A	A	A	TMS	TDI

Note
2. NC/72M, NC/144M, and NC/288M are not connected to the die and can be tied to any voltage level.

Pin Definitions

Pin Name	I/O	Pin Description
$DQ_{[x:0]}$	Input output-synchronous	**Data input output signals**. Inputs are sampled on the rising edge of K and $\overline{K}$ clocks during valid write operations. These pins drive out the requested data when the read operation is active. Valid data is driven out on the rising edge of both the K and $\overline{K}$ clocks during read operations. When read access is deselected, $Q_{[x:0]}$ are automatically tri-stated. CY7C2268KV18 – $DQ_{[17:0]}$ CY7C2270KV18 – $DQ_{[35:0]}$
$\overline{LD}$	Input-synchronous	**Synchronous load**. Sampled on the rising edge of the K clock. This input is brought LOW when a bus cycle sequence is defined. This definition includes address and read/write direction. All transactions operate on a burst of 2 data. $\overline{LD}$ must meet the setup and hold times around edge of K.
$\overline{BWS}_0$, $\overline{BWS}_1$, $\overline{BWS}_2$, $\overline{BWS}_3$	Input-synchronous	**Byte write select 0, 1, 2, and 3 – active LOW**. Sampled on the rising edge of the K and $\overline{K}$ clocks during write operations. Used to select which byte is written into the device during the current portion of the write operations. Bytes not written remain unaltered. CY7C2268KV18 – $\overline{BWS}_0$ controls $D_{[8:0]}$ and $\overline{BWS}_1$ controls $D_{[17:9]}$. CY7C2270KV18 – $\overline{BWS}_0$ controls $D_{[8:0]}$, $\overline{BWS}_1$ controls $D_{[17:9]}$, $\overline{BWS}_2$ controls $D_{[26:18]}$ and $\overline{BWS}_3$ controls $D_{[35:27]}$. All the byte write selects are sampled on the same edge as the data. Deselecting a byte write select ignores the corresponding byte of data and it is not written into the device.
A	Input-synchronous	**Address inputs**. Sampled on the rising edge of the K clock during active read and write operations. These address inputs are multiplexed for both read and write operations. Internally, the device is organized as 2 M × 18 (2 arrays each of 1 M × 18) for CY7C2268KV18, and 1 M × 36 (2 arrays each of 512 K × 36) for CY7C2270KV18.
$R/\overline{W}$	Input-synchronous	**Synchronous read or write input**. When $\overline{LD}$ is LOW, this input designates the access type (read when $R/\overline{W}$ is HIGH, write when $R/\overline{W}$ is LOW) for loaded address. $R/\overline{W}$ must meet the setup and hold times around edge of K.
QVLD	Valid output indicator	**Valid output indicator**. The Q Valid indicates valid output data. QVLD is edge aligned with CQ and $\overline{CQ}$.
ODT [3]	On-die termination input pin	**On-die termination input**. This pin is used for on-die termination of the input signals. ODT range selection is made during power up initialization. A LOW on this pin selects a low range that follows RQ/3.33 for 175 Ω ≤ RQ ≤ 350 Ω (where RQ is the resistor tied to ZQ pin). A HIGH on this pin selects a high range that follows RQ/1.66 for 175 Ω ≤ RQ ≤ 250 Ω (where RQ is the resistor tied to ZQ pin). When left floating, a high range termination value is selected by default.
K	Input clock	**Positive input clock input**. The rising edge of K is used to capture synchronous inputs to the device and to drive out data through $Q_{[x:0]}$. All accesses are initiated on the rising edge of K.
$\overline{K}$	Input clock	**Negative input clock input**. $\overline{K}$ is used to capture synchronous data being presented to the device and to drive out data through $Q_{[x:0]}$.
CQ	Echo clock	**Synchronous echo clock outputs**. This is a free running clock and is synchronized to the input clock (K) of the DDR II+. The timing for the echo clocks is shown in the Switching Characteristics on page 23.
$\overline{CQ}$	Echo clock	**Synchronous echo clock outputs**. This is a free running clock and is synchronized to the input clock ($\overline{K}$) of the DDR II+. The timing for the echo clocks is shown in the Switching Characteristics on page 23.
ZQ	Input	**Output impedance matching input**. This input is used to tune the device outputs to the system data bus impedance. CQ, $\overline{CQ}$, and $Q_{[x:0]}$ output impedance are set to 0.2 × RQ, where RQ is a resistor connected between ZQ and ground. Alternatively, this pin can be connected directly to V_{DDQ}, which enables the minimum impedance mode. This pin cannot be connected directly to GND or left unconnected.

Note
3. On-die termination (ODT) feature is supported for $D_{[x:0]}$, $BWS_{[x:0]}$, and $K/\overline{K}$ inputs.

Pin Definitions *(continued)*

Pin Name	I/O	Pin Description
$\overline{DOFF}$	Input	**PLL turn off – active LOW**. Connecting this pin to ground turns off the PLL inside the device. The timing in the PLL turned off operation differs from those listed in this data sheet. For normal operation, this pin can be connected to a pull up through a 10 kΩ or less pull-up resistor. The device behaves in DDR I mode when the PLL is turned off. In this mode, the device can be operated at a frequency of up to 167 MHz with DDR I timing.
TDO	Output	**TDO pin for JTAG**.
TCK	Input	**TCK pin for JTAG**.
TDI	Input	**TDI pin for JTAG**.
TMS	Input	**TMS pin for JTAG**.
NC	N/A	**Not connected to the die**. Can be tied to any voltage level.
NC/72M	Input	**Not connected to the die**. Can be tied to any voltage level.
NC/144M	Input	**Not connected to the die**. Can be tied to any voltage level.
NC/288M	Input	**Not connected to the die**. Can be tied to any voltage level.
V_{REF}	Input-reference	**Reference voltage input**. Static input used to set the reference level for HSTL inputs, outputs, and AC measurement points.
V_{DD}	Power supply	**Power supply inputs to the core of the device**.
V_{SS}	Ground	**Ground for the device**.
V_{DDQ}	Power supply	**Power supply inputs for the outputs of the device**.

Functional Overview

The CY7C2268KV18, and CY7C2270KV18 are synchronous pipelined burst SRAMs equipped with a DDR interface, which operates with a read latency of two and half cycles when $\overline{DOFF}$ pin is tied HIGH. When $\overline{DOFF}$ pin is set LOW or connected to V_{SS} the device behaves in DDR I mode with a read latency of one clock cycle.

Accesses are initiated on the rising edge of the positive input clock (K). All synchronous input and output timing is referenced from the rising edge of the input clocks (K and $\overline{K}$).

All synchronous data inputs ($D_{[x:0]}$) pass through input registers controlled by the rising edge of the input clocks (K and $\overline{K}$). All synchronous data outputs ($Q_{[x:0]}$) pass through output registers controlled by the rising edge of the input clocks (K and $\overline{K}$).

All synchronous control (R/$\overline{W}$, $\overline{LD}$, $\overline{BWS}_{[X:0]}$) inputs pass through input registers controlled by the rising edge of the input clock (K).

CY7C2268KV18 is described in the following sections. The same basic descriptions apply to CY7C2270KV18.

Read Operations

The CY7C2268KV18 is organized internally as two arrays of 1M × 18. Accesses are completed in a burst of 2 sequential 18-bit data words. Read operations are initiated by asserting R/$\overline{W}$ HIGH and $\overline{LD}$ LOW at the rising edge of the positive input clock (K). The address presented to the address inputs is stored in the read address register. Following the next two $\overline{K}$ clock rise, the corresponding 18-bit word of data from this address location is driven onto the $Q_{[17:0]}$ using $\overline{K}$ as the output timing reference. On the subsequent rising edge of K, the next 18-bit data word is driven onto the $Q_{[17:0]}$. The requested data is valid 0.45 ns from the rising edge of the input clock (K and $\overline{K}$). To maintain the internal logic, each read access must be allowed to complete. Read accesses can be initiated on every rising edge of the positive input clock (K).

When read access is deselected, the CY7C2268KV18 first completes the pending read transactions. Synchronous internal circuitry automatically tri-states the output following the next rising edge of the negative input clock ($\overline{K}$). This enables for a transition between devices without the insertion of wait states in a depth expanded memory.

Write Operations

Write operations are initiated by asserting R/$\overline{W}$ LOW and $\overline{LD}$ LOW at the rising edge of the positive input clock (K). The address presented to address inputs is stored in the write address register. On the following K clock rise, the data presented to $D_{[17:0]}$ is latched and stored into the 18-bit write data register, provided $\overline{BWS}_{[1:0]}$ are both asserted active. On the subsequent rising edge of the negative input clock ($\overline{K}$) the information presented to $D_{[17:0]}$ is also stored into the write data register, provided $\overline{BWS}_{[1:0]}$ are both asserted active. The 36 bits of data are then written into the memory array at the specified location. Write accesses can be initiated on every rising edge of the positive input clock (K). Doing so pipelines the data flow such that 18 bits of data can be transferred into the device on every rising edge of the input clocks (K and $\overline{K}$).

When the write access is deselected, the device ignores all inputs after the pending write operations are completed.

Byte Write Operations

Byte write operations are supported by the CY7C2268KV18. A write operation is initiated as described in the section Write Operations on page 6. The bytes that are written are determined

by $\overline{BWS}_0$ and $\overline{BWS}_1$, which are sampled with each set of 18-bit data words. Asserting the appropriate byte write select input during the data portion of a write latches the data being presented and writes it into the device. Deasserting the byte write select input during the data portion of a write enables the data stored in the device for that byte to remain unaltered. This feature can be used to simplify read, modify, or write operations to a byte write operation.

DDR Operation

The CY7C2268KV18 enables high performance operation through high clock frequencies (achieved through pipelining) and DDR mode of operation. The CY7C2268KV18 requires two No Operation (NOP) cycle during transition from a read to a write cycle. At higher frequencies, some applications require third NOP cycle to avoid contention.

If a read occurs after a write cycle, address and data for the write are stored in registers. The write information is stored because the SRAM cannot perform the last word write to the array without conflicting with the read. The data stays in this register until the next write cycle occurs. On the first write cycle after the read(s), the stored data from the earlier write is written into the SRAM array. This is called a posted write.

If a read is performed on the same address on which a write is performed in the previous cycle, the SRAM reads out the most current data. The SRAM does this by bypassing the memory array and reading the data from the registers.

Depth Expansion

Depth expansion requires replicating the $\overline{LD}$ control signal for each bank. All other control signals can be common between banks as appropriate.

Programmable Impedance

An external resistor, RQ, must be connected between the ZQ pin on the SRAM and V_{SS} to allow the SRAM to adjust its output driver impedance. The value of RQ must be 5 × the value of the intended line impedance driven by the SRAM. The allowable range of RQ to guarantee impedance matching with a tolerance of ±15% is between 175 Ω and 350 Ω, with V_{DDQ} = 1.5 V. The output impedance is adjusted every 1024 cycles upon power-up to account for drifts in supply voltage and temperature.

Echo Clocks

Echo clocks are provided on the DDR II+ to simplify data capture on high speed systems. Two echo clocks are generated by the DDR II+. CQ is referenced with respect to K and $\overline{CQ}$ is referenced with respect to $\overline{K}$. These are free-running clocks and are synchronized to the input clock of the DDR II+. The timing for the echo clocks is shown in the Switching Characteristics on page 23.

Valid Data Indicator (QVLD)

QVLD is provided on the DDR II+ to simplify data capture on high speed systems. The QVLD is generated by the DDR II+ device along with data output. This signal is also edge aligned with the echo clock and follows the timing of any data pin. This signal is asserted half a cycle before valid data arrives.

On-Die Termination (ODT)

These devices have an on-die termination feature for data inputs ($D_{[x:0]}$), byte write selects ($BWS_{[x:0]}$), and input clocks (K and $\overline{K}$). The termination resistors are integrated within the chip. The ODT range selection is enabled through ball R6 (ODT pin). The ODT termination tracks value of RQ where RQ is the resistor tied to the ZQ pin. ODT range selection is made during power-up initialization. A LOW on this pin selects a low range that follows RQ/3.33 for 175 Ω ≤ RQ ≤ 350 Ω (where RQ is the resistor tied to ZQ pin). A HIGH on this pin selects a high range that follows RQ/1.66 for 175 Ω ≤ RQ ≤ 250 Ω (where RQ is the resistor tied to ZQ pin). When left floating, a high range termination value is selected by default. For a detailed description on the ODT implementation, refer to the application note, *On-Die Termination for QDRII+/DDRII+ SRAMs*.

PLL

These chips use a PLL that is designed to function between 120 MHz and the specified maximum clock frequency. During power up, when the $\overline{DOFF}$ is tied HIGH, the PLL is locked after 20 µs of stable clock. The PLL can also be reset by slowing or stopping the input clock K and $\overline{K}$ for a minimum of 30 ns. However, it is not necessary to reset the PLL to lock to the desired frequency. The PLL automatically locks 20 µs after a stable clock is presented. The PLL may be disabled by applying ground to the $\overline{DOFF}$ pin. When the PLL is turned off, the device behaves in DDR I mode (with one cycle latency and a longer access time). For information, refer to the application note, *PLL Considerations in QDRII/DDRII/QDRII+/DDRII+*.

Application Example

Figure 2 shows two DDR II+ used in an application.

Figure 2. Application Example (Width Expansion)

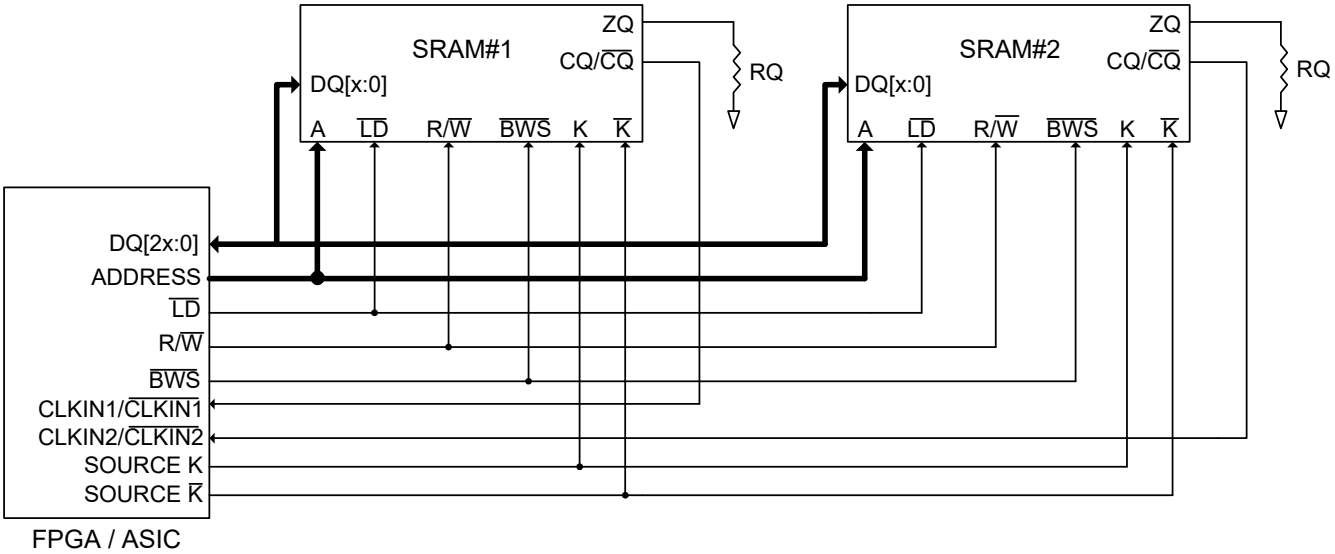

Truth Table

The truth table for CY7C2268KV18 and CY7C2270KV18 follow. [4, 5, 6, 7, 8, 9]

Operation	K	$\overline{LD}$	R/$\overline{W}$	DQ	DQ
Write cycle: Load address; wait one cycle; input write data on consecutive K and $\overline{K}$ rising edges.	L–H	L	L	D(A) at K(t + 1) ↑	D(A+1) at $\overline{K}$(t + 1) ↑
Read cycle: (2.5 cycle latency) Load address; wait two and half cycles; read data on consecutive $\overline{K}$ and K rising edges.	L–H	L	H	Q(A) at $\overline{K}$(t + 2)↑	Q(A+1) at K(t + 3) ↑
NOP: No operation	L–H	H	X	High Z	High Z
Standby: Clock stopped	Stopped	X	X	Previous state	Previous state

Write Cycle Descriptions

The write cycle description table for and CY7C2268KV18 follows. [4, 10]

$\overline{BWS_0}$	$\overline{BWS_1}$	K	$\overline{K}$	Comments
L	L	L–H	–	During the data portion of a write sequence: CY7C2268KV18 – both bytes ($D_{[17:0]}$) are written into the device.
L	L	–	L–H	During the data portion of a write sequence: CY7C2268KV18 – both bytes ($D_{[17:0]}$) are written into the device.
L	H	L–H	–	During the data portion of a write sequence: CY7C2268KV18 – only the lower byte ($D_{[8:0]}$) is written into the device, $D_{[17:9]}$ remains unaltered.
L	H	–	L–H	During the data portion of a write sequence: CY7C2268KV18 – only the lower byte ($D_{[8:0]}$) is written into the device, $D_{[17:9]}$ remains unaltered.
H	L	L–H	–	During the data portion of a write sequence: CY7C2268KV18 – only the upper byte ($D_{[17:9]}$) is written into the device, $D_{[8:0]}$ remains unaltered.
H	L	–	L–H	During the data portion of a write sequence: CY7C2268KV18 – only the upper byte ($D_{[17:9]}$) is written into the device, $D_{[8:0]}$ remains unaltered.
H	H	L–H	–	No data is written into the devices during this portion of a write operation.
H	H	–	L–H	No data is written into the devices during this portion of a write operation.

Notes

4. X = "Don't Care," H = Logic HIGH, L = Logic LOW, ↑ represents rising edge.
5. Device powers up deselected with the outputs in a tri-state condition.
6. "A" represents address location latched by the devices when transaction was initiated. A + 1 represents the address sequence in the burst.
7. "t" represents the cycle at which a read/write operation is started. t + 1 and t + 2 are the first and second clock cycles succeeding the "t" clock cycle.
8. Data inputs are registered at K and $\overline{K}$ rising edges. Data outputs are delivered on K and $\overline{K}$ rising edges as well.
9. It is recommended that K = $\overline{K}$ = HIGH when clock is stopped. This is not essential, but permits most rapid restart by overcoming transmission line charging symmetrically.
10. Is based on a write cycle that was initiated in accordance with Truth Table. $\overline{BWS_0}$, $\overline{BWS_1}$, $\overline{BWS_2}$, and $\overline{BWS_3}$ can be altered on different portions of a write cycle, as long as the setup and hold requirements are achieved.

Write Cycle Descriptions

The write cycle description table for CY7C2270KV18 follows. [11, 12]

$\overline{BWS_0}$	$\overline{BWS_1}$	$\overline{BWS_2}$	$\overline{BWS_3}$	K	$\overline{K}$	Comments
L	L	L	L	L–H	–	During the data portion of a write sequence, all four bytes ($D_{[35:0]}$) are written into the device.
L	L	L	L	–	L–H	During the data portion of a write sequence, all four bytes ($D_{[35:0]}$) are written into the device.
L	H	H	H	L–H	–	During the data portion of a write sequence, only the lower byte ($D_{[8:0]}$) is written into the device. $D_{[35:9]}$ remains unaltered.
L	H	H	H	–	L–H	During the data portion of a write sequence, only the lower byte ($D_{[8:0]}$) is written into the device. $D_{[35:9]}$ remains unaltered.
H	L	H	H	L–H	–	During the data portion of a write sequence, only the byte ($D_{[17:9]}$) is written into the device. $D_{[8:0]}$ and $D_{[35:18]}$ remains unaltered.
H	L	H	H	–	L–H	During the data portion of a write sequence, only the byte ($D_{[17:9]}$) is written into the device. $D_{[8:0]}$ and $D_{[35:18]}$ remains unaltered.
H	H	L	H	L–H	–	During the data portion of a write sequence, only the byte ($D_{[26:18]}$) is written into the device. $D_{[17:0]}$ and $D_{[35:27]}$ remains unaltered.
H	H	L	H	–	L–H	During the data portion of a write sequence, only the byte ($D_{[26:18]}$) is written into the device. $D_{[17:0]}$ and $D_{[35:27]}$ remains unaltered.
H	H	H	L	L–H	–	During the data portion of a write sequence, only the byte ($D_{[35:27]}$) is written into the device. $D_{[26:0]}$ remains unaltered.
H	H	H	L	–	L–H	During the data portion of a write sequence, only the byte ($D_{[35:27]}$) is written into the device. $D_{[26:0]}$ remains unaltered.
H	H	H	H	L–H	–	No data is written into the device during this portion of a write operation.
H	H	H	H	–	L–H	No data is written into the device during this portion of a write operation.

Notes

11. X = "Don't Care," H = Logic HIGH, L = Logic LOW, ↑ represents rising edge.
12. Is based on a write cycle that was initiated in accordance with Truth Table on page 9. $\overline{BWS_0}$, $\overline{BWS_1}$, $\overline{BWS_2}$, and $\overline{BWS_3}$ can be altered on different portions of a write cycle, as long as the set-up and hold requirements are achieved.

IEEE 1149.1 Serial Boundary Scan (JTAG)

These SRAMs incorporate a serial boundary scan test access port (TAP) in the FBGA package. This part is fully compliant with IEEE Standard #1149.1-2001. The TAP operates using JEDEC standard 1.8 V I/O logic levels.

Disabling the JTAG Feature

It is possible to operate the SRAM without using the JTAG feature. To disable the TAP controller, TCK must be tied LOW (V_{SS}) to prevent clocking of the device. TDI and TMS are internally pulled up and may be unconnected. They may alternatively be connected to V_{DD} through a pull-up resistor. TDO must be left unconnected. Upon power-up, the device comes up in a reset state, which does not interfere with the operation of the device.

Test Access Port

Test Clock

The test clock is used only with the TAP controller. All inputs are captured on the rising edge of TCK. All outputs are driven from the falling edge of TCK.

Test Mode Select (TMS)

The TMS input is used to give commands to the TAP controller and is sampled on the rising edge of TCK. This pin may be left unconnected if the TAP is not used. The pin is pulled up internally, resulting in a logic HIGH level.

Test Data-In (TDI)

The TDI pin is used to serially input information into the registers and can be connected to the input of any of the registers. The register between TDI and TDO is chosen by the instruction that is loaded into the TAP instruction register. For information on loading the instruction register, see TAP Controller State Diagram on page 13. TDI is internally pulled up and can be unconnected if the TAP is unused in an application. TDI is connected to the most significant bit (MSB) on any register.

Test Data-Out (TDO)

The TDO output pin is used to serially clock data out from the registers. The output is active, depending upon the current state of the TAP state machine (see Instruction Codes on page 17). The output changes on the falling edge of TCK. TDO is connected to the least significant bit (LSB) of any register.

Performing a TAP Reset

A reset is performed by forcing TMS HIGH (V_{DD}) for five rising edges of TCK. This reset does not affect the operation of the SRAM and can be performed while the SRAM is operating. At power up, the TAP is reset internally to ensure that TDO comes up in a high Z state.

TAP Registers

Registers are connected between the TDI and TDO pins to scan the data in and out of the SRAM test circuitry. Only one register can be selected at a time through the instruction registers. Data is serially loaded into the TDI pin on the rising edge of TCK. Data is output on the TDO pin on the falling edge of TCK.

Instruction Register

Three-bit instructions can be serially loaded into the instruction register. This register is loaded when it is placed between the TDI and TDO pins, as shown in TAP Controller Block Diagram on page 14. Upon power-up, the instruction register is loaded with the IDCODE instruction. It is also loaded with the IDCODE instruction if the controller is placed in a reset state, as described in the previous section.

When the TAP controller is in the Capture-IR state, the two least significant bits are loaded with a binary “01” pattern to allow for fault isolation of the board level serial test path.

Bypass Register

To save time when serially shifting data through registers, it is sometimes advantageous to skip certain chips. The bypass register is a single-bit register that can be placed between TDI and TDO pins. This enables shifting of data through the SRAM with minimal delay. The bypass register is set LOW (V_{SS}) when the BYPASS instruction is executed.

Boundary Scan Register

The boundary scan register is connected to all of the input and output pins on the SRAM. Several No Connect (NC) pins are also included in the scan register to reserve pins for higher density devices.

The boundary scan register is loaded with the contents of the RAM input and output ring when the TAP controller is in the Capture-DR state and is then placed between the TDI and TDO pins when the controller is moved to the Shift-DR state. The EXTEST, SAMPLE/PRELOAD, and SAMPLE Z instructions can be used to capture the contents of the input and output ring.

Boundary Scan Order on page 18 shows the order in which the bits are connected. Each bit corresponds to one of the bumps on the SRAM package. The MSB of the register is connected to TDI, and the LSB is connected to TDO.

Identification (ID) Register

The ID register is loaded with a vendor-specific, 32-bit code during the Capture-DR state when the IDCODE command is loaded in the instruction register. The IDCODE is hardwired into the SRAM and can be shifted out when the TAP controller is in the Shift-DR state. The ID register has a vendor code and other information described in Identification Register Definitions on page 17.

TAP Instruction Set

Eight different instructions are possible with the three-bit instruction register. All combinations are listed in Instruction Codes on page 17. Three of these instructions are listed as RESERVED and must not be used. The other five instructions are described in this section in detail.

Instructions are loaded into the TAP controller during the Shift-IR state when the instruction register is placed between TDI and TDO. During this state, instructions are shifted through the instruction register through the TDI and TDO pins. To execute the instruction after it is shifted in, the TAP controller must be moved into the Update-IR state.

IDCODE

The IDCODE instruction loads a vendor-specific, 32-bit code into the instruction register. It also places the instruction register between the TDI and TDO pins and shifts the IDCODE out of the device when the TAP controller enters the Shift-DR state. The IDCODE instruction is loaded into the instruction register at power up or whenever the TAP controller is supplied a Test-Logic-Reset state.

SAMPLE Z

The SAMPLE Z instruction connects the boundary scan register between the TDI and TDO pins when the TAP controller is in a Shift-DR state. The SAMPLE Z command puts the output bus into a high Z state until the next command is supplied during the Update IR state.

SAMPLE/PRELOAD

SAMPLE/PRELOAD is a 1149.1 mandatory instruction. When the SAMPLE/PRELOAD instructions are loaded into the instruction register and the TAP controller is in the Capture-DR state, a snapshot of data on the input and output pins is captured in the boundary scan register.

The user must be aware that the TAP controller clock can only operate at a frequency up to 20 MHz, while the SRAM clock operates more than an order of magnitude faster. Because there is a large difference in the clock frequencies, it is possible that during the Capture-DR state, an input or output undergoes a transition. The TAP may then try to capture a signal while in transition (metastable state). This does not harm the device, but there is no guarantee as to the value that is captured. Repeatable results may not be possible.

To guarantee that the boundary scan register captures the correct value of a signal, the SRAM signal must be stabilized long enough to meet the TAP controller's capture setup plus hold times (t_{CS} and t_{CH}). The SRAM clock input might not be captured correctly if there is no way in a design to stop (or slow) the clock during a SAMPLE/PRELOAD instruction. If this is an issue, it is still possible to capture all other signals and simply ignore the value of the CK and $\overline{CK}$ captured in the boundary scan register.

After the data is captured, it is possible to shift out the data by putting the TAP into the Shift-DR state. This places the boundary scan register between the TDI and TDO pins.

PRELOAD places an initial data pattern at the latched parallel outputs of the boundary scan register cells before the selection of another boundary scan test operation.

The shifting of data for the SAMPLE and PRELOAD phases can occur concurrently when required, that is, while the data captured is shifted out, the preloaded data can be shifted in.

BYPASS

When the BYPASS instruction is loaded in the instruction register and the TAP is placed in a Shift-DR state, the bypass register is placed between the TDI and TDO pins. The advantage of the BYPASS instruction is that it shortens the boundary scan path when multiple devices are connected together on a board.

EXTEST

The EXTEST instruction drives the preloaded data out through the system output pins. This instruction also connects the boundary scan register for serial access between the TDI and TDO in the Shift-DR controller state.

EXTEST OUTPUT BUS TRI-STATE

IEEE Standard 1149.1 mandates that the TAP controller be able to put the output bus into a tri-state mode.

The boundary scan register has a special bit located at bit #108. When this scan cell, called the "extest output bus tri-state," is latched into the preload register during the Update-DR state in the TAP controller, it directly controls the state of the output (Q-bus) pins, when the EXTEST is entered as the current instruction. When HIGH, it enables the output buffers to drive the output bus. When LOW, this bit places the output bus into a high Z condition.

This bit can be set by entering the SAMPLE/PRELOAD or EXTEST command, and then shifting the desired bit into that cell, during the Shift-DR state. During Update-DR, the value loaded into that shift-register cell latches into the preload register. When the EXTEST instruction is entered, this bit directly controls the output Q-bus pins. Note that this bit is preset HIGH to enable the output when the device is powered up, and also when the TAP controller is in the Test-Logic-Reset state.

Reserved

These instructions are not implemented but are reserved for future use. Do not use these instructions.

TAP Controller State Diagram

The state diagram for the TAP controller follows. [13]

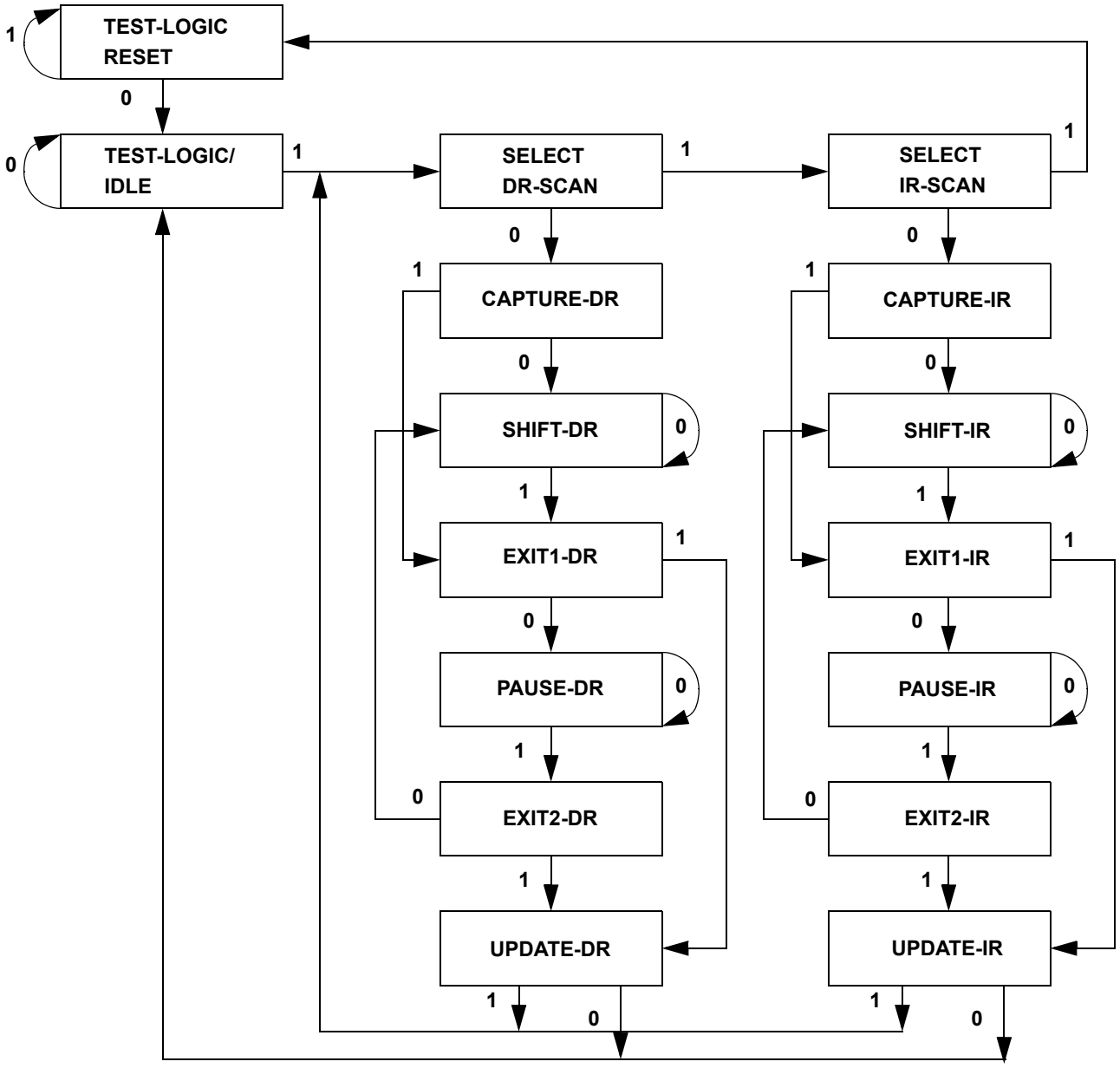

Note
13. The 0/1 next to each state represents the value at TMS at the rising edge of TCK.

TAP Controller Block Diagram

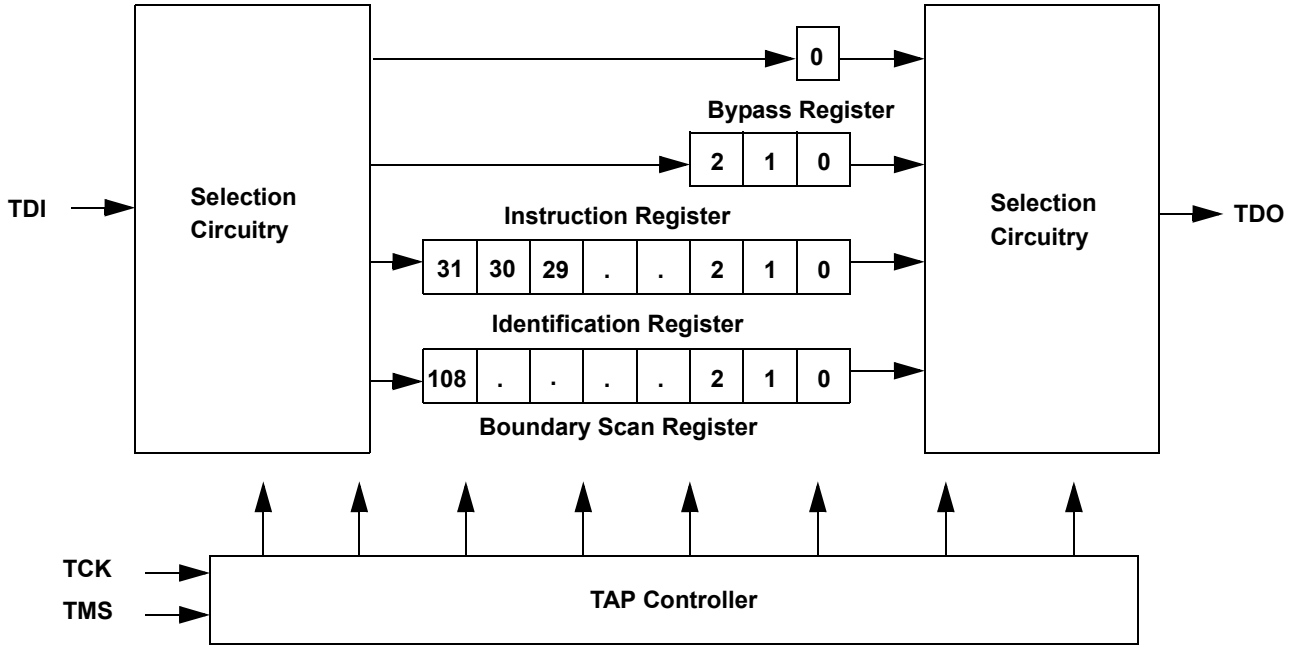

TAP Electrical Characteristics

Over the Operating Range

Parameter [14, 15, 16]	Description	Test Conditions	Min	Max	Unit
V_{OH1}	Output HIGH voltage	I_{OH} = –2.0 mA	1.4	–	V
V_{OH2}	Output HIGH voltage	I_{OH} = –100 µA	1.6	–	V
V_{OL1}	Output LOW voltage	I_{OL} = 2.0 mA	–	0.4	V
V_{OL2}	Output LOW voltage	I_{OL} = 100 µA	–	0.2	V
V_{IH}	Input HIGH voltage		0.65 × V_{DD}	V_{DD} + 0.3	V
V_{IL}	Input LOW voltage		–0.3	0.35 × V_{DD}	V
I_X	Input and output load current	GND ≤ V_I ≤ V_{DD}	–5	5	µA

Notes
14. These characteristics pertain to the TAP inputs (TMS, TCK, TDI and TDO). Parallel load levels are specified in the Electrical Characteristics on page 20.
15. Overshoot: $V_{IH(AC)} < V_{DDQ} + 0.3$ V (Pulse width less than $t_{CYC}/2$), Undershoot: $V_{IL(AC)} > -0.3$ V (Pulse width less than $t_{CYC}/2$).
16. All voltage referenced to ground.

TAP AC Switching Characteristics

Over the Operating Range

Parameter [17, 18]	Description	Min	Max	Unit
t_{TCYC}	TCK clock cycle time	50	–	ns
t_{TF}	TCK clock frequency	–	20	MHz
t_{TH}	TCK clock HIGH	20	–	ns
t_{TL}	TCK clock LOW	20	–	ns
Setup Times				
t_{TMSS}	TMS set-up to TCK clock rise	5	–	ns
t_{TDIS}	TDI set-up to TCK clock rise	5	–	ns
t_{CS}	Capture set-up to TCK rise	5	–	ns
Hold Times				
t_{TMSH}	TMS hold after TCK clock rise	5	–	ns
t_{TDIH}	TDI hold after clock rise	5	–	ns
t_{CH}	Capture hold after clock rise	5	–	ns
Output Times				
t_{TDOV}	TCK clock LOW to TDO valid	–	10	ns
t_{TDOX}	TCK clock LOW to TDO invalid	0	–	ns

Notes

17. t_{CS} and t_{CH} refer to the setup and hold time requirements of latching data from the boundary scan register.
18. Test conditions are specified using the load in TAP AC Test Conditions. t_R/t_F = 1 ns.

TAP Timing and Test Conditions

Figure 3 shows the TAP timing and test conditions. [19]

Figure 3. TAP Timing and Test Conditions

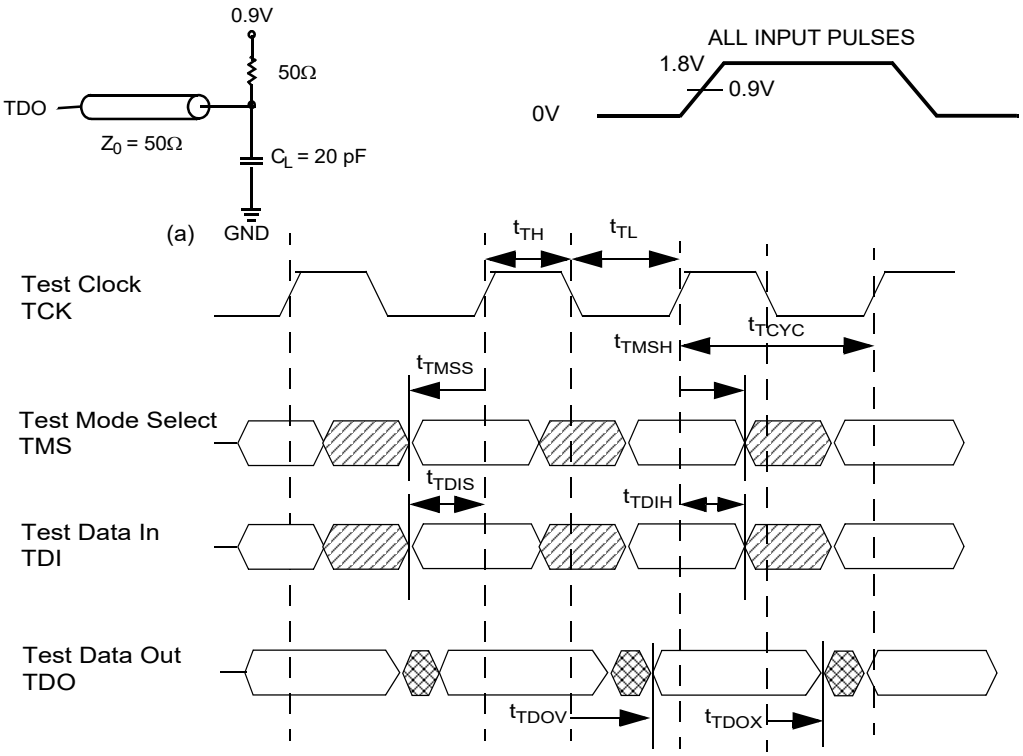

Notes

19. Test conditions are specified using the load in TAP AC Test Conditions. t_R/t_F = 1 ns.

Identification Register Definitions

Instruction Field	Value		Description
	CY7C2268KV18	CY7C2270KV18	
Revision number (31:29)	000	000	Version number.
Cypress device ID (28:12)	11010111000010111	11010111000100111	Defines the type of SRAM.
Cypress JEDEC ID (11:1)	00000110100	00000110100	Allows unique identification of SRAM vendor.
ID register presence (0)	1	1	Indicates the presence of an ID register.

Scan Register Sizes

Register Name	Bit Size
Instruction	3
Bypass	1
ID	32
Boundary scan	109

Instruction Codes

Instruction	Code	Description
EXTEST	000	Captures the input and output ring contents.
IDCODE	001	Loads the ID register with the vendor ID code and places the register between TDI and TDO. This operation does not affect SRAM operation.
SAMPLE Z	010	Captures the input and output contents. Places the boundary scan register between TDI and TDO. Forces all SRAM output drivers to a high Z state.
RESERVED	011	Do Not Use: This instruction is reserved for future use.
SAMPLE/PRELOAD	100	Captures the input and output ring contents. Places the boundary scan register between TDI and TDO. Does not affect the SRAM operation.
RESERVED	101	Do Not Use: This instruction is reserved for future use.
RESERVED	110	Do Not Use: This instruction is reserved for future use.
BYPASS	111	Places the bypass register between TDI and TDO. This operation does not affect SRAM operation.

Boundary Scan Order

Bit #	Bump ID	Bit #	Bump ID	Bit #	Bump ID	Bit #	Bump ID
0	6R	28	10G	56	6A	84	1J
1	6P	29	9G	57	5B	85	2J
2	6N	30	11F	58	5A	86	3K
3	7P	31	11G	59	4A	87	3J
4	7N	32	9F	60	5C	88	2K
5	7R	33	10F	61	4B	89	1K
6	8R	34	11E	62	3A	90	2L
7	8P	35	10E	63	2A	91	3L
8	9R	36	10D	64	1A	92	1M
9	11P	37	9E	65	2B	93	1L
10	10P	38	10C	66	3B	94	3N
11	10N	39	11D	67	1C	95	3M
12	9P	40	9C	68	1B	96	1N
13	10M	41	9D	69	3D	97	2M
14	11N	42	11B	70	3C	98	3P
15	9M	43	11C	71	1D	99	2N
16	9N	44	9B	72	2C	100	2P
17	11L	45	10B	73	3E	101	1P
18	11M	46	11A	74	2D	102	3R
19	9L	47	10A	75	2E	103	4R
20	10L	48	9A	76	1E	104	4P
21	11K	49	8B	77	2F	105	5P
22	10K	50	7C	78	3F	106	5N
23	9J	51	6C	79	1G	107	5R
24	9K	52	8A	80	1F	108	Internal
25	10J	53	7A	81	3G		
26	11J	54	7B	82	2G		
27	11H	55	6B	83	1H		

Power Up Sequence in DDR II+ SRAM

DDR II+ SRAMs must be powered up and initialized in a predefined manner to prevent undefined operations.

Power Up Sequence

- Apply power and drive $\overline{DOFF}$ either HIGH or LOW (all other inputs can be HIGH or LOW).
  - Apply V_{DD} before V_{DDQ}.
  - Apply V_{DDQ} before V_{REF} or at the same time as V_{REF}.
  - Drive $\overline{DOFF}$ HIGH.
- Provide stable $\overline{DOFF}$ (HIGH), power and clock (K, $\overline{K}$) for 20 µs to lock the PLL

PLL Constraints

- PLL uses K clock as its synchronizing input. The input must have low phase jitter, which is specified as $t_{KC\ Var}$.
- The PLL functions at frequencies down to 120 MHz.
- If the input clock is unstable and the PLL is enabled, then the PLL may lock onto an incorrect frequency, causing unstable SRAM behavior. To avoid this, provide 20 µs of stable clock to relock to the desired clock frequency.

Figure 4. Power Up Waveforms

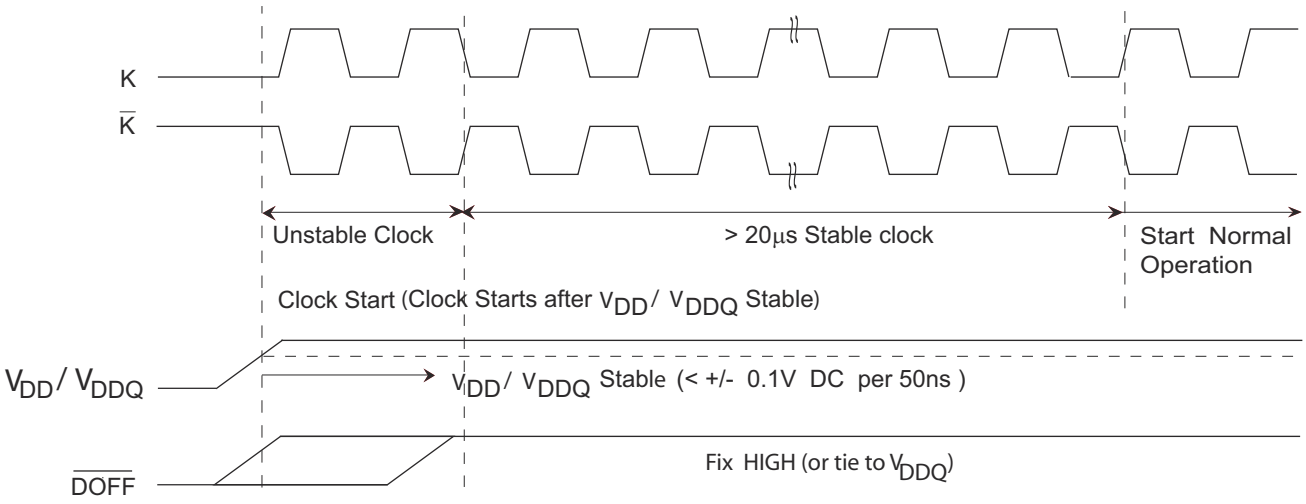

Maximum Ratings

Exceeding maximum ratings may impair the useful life of the device. These user guidelines are not tested.

Storage temperature ..... –65 °C to +150 °C

Ambient temperature with power applied ..... –55 °C to +125 °C

Supply voltage on V_{DD} relative to GND .....–0.5 V to +2.9 V

Supply voltage on V_{DDQ} relative to GND ..... –0.5 V to +V_{DD}

DC applied to outputs in high Z .....–0.5 V to V_{DDQ} + 0.3 V

DC input voltage [20] .....–0.5 V to V_{DD} + 0.3 V

Current into outputs (LOW) ..... 20 mA

Static discharge voltage (MIL-STD-883, M 3015) .....> 2,001 V

Latch-up current .....> 200 mA

Operating Range

Range	Ambient Temperature (T_A)	V_{DD} [21]	V_{DDQ} [21]
Commercial	0 °C to +70 °C	1.8 ± 0.1 V	1.4 V to V_{DD}
Industrial	–40 °C to +85 °C		

Neutron Soft Error Immunity

Parameter	Description	Test Conditions	Typ	Max*	Unit
LSBU	Logical single-bit upsets	25 °C	197	216	FIT/Mb
LMBU	Logical multi-bit upsets	25 °C	0	0.01	FIT/Mb
SEL	Single event latch-up	85 °C	0	0.1	FIT/Dev

* *No LMBU or SEL events occurred during testing*; this column represents a statistical χ^2, 95% confidence limit calculation. For more details refer to Application Note AN54908 "Accelerated Neutron SER Testing and Calculation of Terrestrial Failure Rates"

Electrical Characteristics

Over the Operating Range

DC Electrical Characteristics

Over the Operating Range

Parameter [22]	Description	Test Conditions	Min	Typ	Max	Unit
V_{DD}	Power supply voltage		1.7	1.8	1.9	V
V_{DDQ}	I/O supply voltage		1.4	1.5	V_{DD}	V
V_{OH}	Output HIGH voltage	Note 23	$V_{DDQ}/2 – 0.12$	–	$V_{DDQ}/2 + 0.12$	V
V_{OL}	Output LOW voltage	Note 24	$V_{DDQ}/2 – 0.12$	–	$V_{DDQ}/2 + 0.12$	V
$V_{OH(LOW)}$	Output HIGH voltage	I_{OH} = –0.1 mA, nominal impedance	$V_{DDQ} – 0.2$	–	V_{DDQ}	V
$V_{OL(LOW)}$	Output LOW voltage	I_{OL} = 0.1 mA, nominal impedance	V_{SS}	–	0.2	V
V_{IH}	Input HIGH voltage		$V_{REF} + 0.1$	–	$V_{DDQ} + 0.15$	V
V_{IL}	Input LOW voltage		–0.15	–	$V_{REF} – 0.1$	V
I_X	Input leakage current	$GND \le V_I \le V_{DDQ}$	–2	–	2	µA
I_{OZ}	Output leakage current	$GND \le V_I \le V_{DDQ}$, output disabled	–2	–	2	µA
V_{REF}	Input reference voltage [25]	Typical value = 0.75 V	0.68	0.75	0.95	V

Notes

20. Overshoot: $V_{IH(AC)} < V_{DDQ} + 0.3$ V (Pulse width less than $t_{CYC}/2$), Undershoot: $V_{IL(AC)} > –0.3$ V (Pulse width less than $t_{CYC}/2$).
21. Power-up: assumes a linear ramp from 0 V to $V_{DD(min)}$ within 200 ms. During this time $V_{IH} < V_{DD}$ and $V_{DDQ} \le V_{DD}$.
22. All voltage referenced to ground.
23. Outputs are impedance controlled. $I_{OH} = –(V_{DDQ}/2)/(RQ/5)$ for values of 175 Ω ≤ RQ ≤ 350 Ω.
24. Outputs are impedance controlled. $I_{OL} = (V_{DDQ}/2)/(RQ/5)$ for values of 175 Ω ≤ RQ ≤ 350 Ω.
25. $V_{REF(min)}$ = 0.68 V or 0.46 V_{DDQ}, whichever is larger, $V_{REF(max)}$ = 0.95 V or 0.54 V_{DDQ}, whichever is smaller.

Electrical Characteristics *(continued)*

Over the Operating Range

DC Electrical Characteristics *(continued)*

Over the Operating Range

Parameter [22]	Description	Test Conditions			Min	Typ	Max	Unit
I_{DD} [26]	V_{DD} operating supply	V_{DD} = Max, I_{OUT} = 0 mA, f = f_{MAX} = $1/t_{CYC}$	550 MHz	(× 18)	–	–	700	mA
				(× 36)	–	–	890	
			450 MHz	(× 18)	–	–	600	mA
			400 MHz	(× 36)	–	–	690	mA
I_{SB1}	Automatic power-down current	Max V_{DD}, both ports deselected, $V_{IN} \geq V_{IH}$ or $V_{IN} \leq V_{IL}$ f = f_{MAX} = $1/t_{CYC}$, inputs static	550 MHz	(× 18)	–	–	360	mA
				(× 36)	–	–	360	
			450 MHz	(× 18)	–	–	330	mA
			400 MHz	(× 36)	–	–	310	mA

Note
26. The operation current is calculated with 50% read cycle and 50% write cycle.

AC Electrical Characteristics

Over the Operating Range

Parameter [27]	Description	Test Conditions	Min	Typ	Max	Unit
V_{IH}	Input HIGH voltage		V_{REF} + 0.2	–	V_{DDQ} + 0.24	V
V_{IL}	Input LOW voltage		–0.24	–	V_{REF} – 0.2	V

Capacitance

Parameter [28]	Description	Test Conditions	Max	Unit
C_{IN}	Input capacitance	T_A = 25 °C, f = 1 MHz, V_{DD} = 1.8 V, V_{DDQ} = 1.5 V	4	pF
C_O	Output capacitance		4	pF

Thermal Resistance

Parameter [28]	Description	Test Conditions	165-ball FBGA Package	Unit
Θ_{JA} (0 m/s)	Thermal resistance (junction to ambient)	Socketed on a 170 × 220 × 2.35 mm, eight-layer printed circuit board	16.72	°C/W
Θ_{JA} (1 m/s)			15.67	°C/W
Θ_{JA} (3 m/s)			14.92	°C/W
Θ_{JB}	Thermal resistance (junction to board)		13.67	°C/W
Θ_{JC}	Thermal resistance (junction to case)		4.54	°C/W

AC Test Loads and Waveforms

Figure 5. AC Test Loads and Waveforms

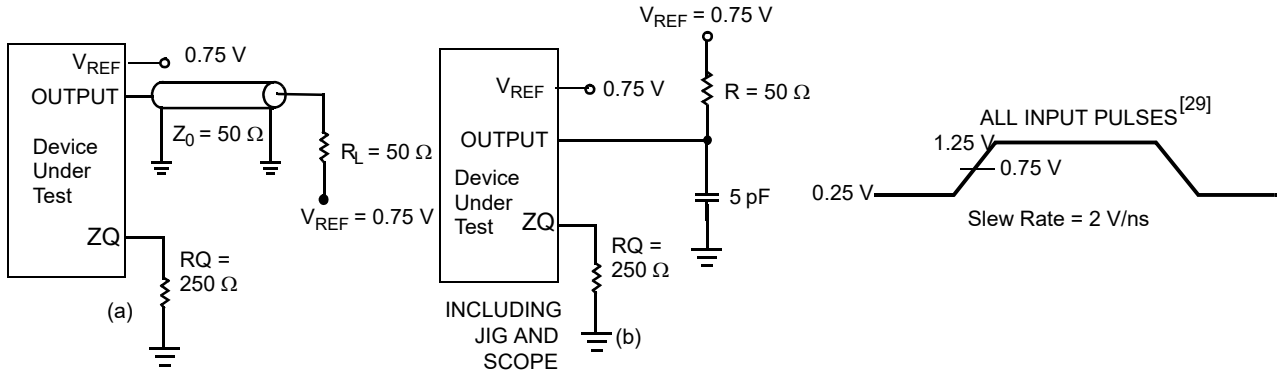

Notes

27. Overshoot: $V_{IH(AC)} < V_{DDQ}$ + 0.3 V (Pulse width less than $t_{CYC}/2$), Undershoot: $V_{IL(AC)} > -0.3$ V (Pulse width less than $t_{CYC}/2$).
28. Tested initially and after any design or process change that may affect these parameters.
29. Unless otherwise noted, test conditions assume signal transition time of 2 V/ns, timing reference levels of 0.75 V, V_{REF} = 0.75 V, RQ = 250 Ω, V_{DDQ} = 1.5 V, input pulse levels of 0.25 V to 1.25 V, and output loading of the specified I_{OL}/I_{OH} and load capacitance shown in (a) of Figure 5.

Switching Characteristics

Over the Operating Range

Parameters [30, 31]		Description	550 MHz		450 MHz		400 MHz		Unit
Cypress Parameter	Consortium Parameter		Min	Max	Min	Max	Min	Max	
t_{POWER}		V_{DD}(typical) to the first access [32]	1	–	1	–	1	–	ms
t_{CYC}	t_{KHKH}	K clock cycle time	1.81	8.4	2.2	8.4	2.5	8.4	ns
t_{KH}	t_{KHKL}	Input clock (K/$\overline{K}$) HIGH	0.4	–	0.4	–	0.4	–	ns
t_{KL}	t_{KLKH}	Input clock (K/$\overline{K}$) LOW	0.4	–	0.4	–	0.4	–	ns
$t_{KH\overline{K}H}$	$t_{KH\overline{K}H}$	K clock rise to $\overline{K}$ clock rise (rising edge to rising edge)	0.77	–	0.94	–	1.06	–	ns
Setup Times									
t_{SA}	t_{AVKH}	Address set-up to K clock rise	0.23	–	0.275	–	0.4	–	ns
t_{SC}	t_{IVKH}	Control set-up to K clock rise ($\overline{LD}$, R/$\overline{W}$)	0.23	–	0.275	–	0.4	–	ns
t_{SCDDR}	t_{IVKH}	Double data rate control set-up to clock (K/$\overline{K}$) rise ($\overline{BWS_0}$, $\overline{BWS_1}$, $\overline{BWS_2}$, $\overline{BWS_3}$)	0.18	–	0.22	–	0.28	–	ns
t_{SD}	t_{DVKH}	$D_{[X:0]}$ set-up to clock (K/$\overline{K}$) rise	0.18	–	0.22	–	0.28	–	ns
Hold Times									
t_{HA}	t_{KHAX}	Address hold after K clock rise	0.23	–	0.275	–	0.4	–	ns
t_{HC}	t_{KHIX}	Control hold after K clock rise ($\overline{LD}$, R/$\overline{W}$)	0.23	–	0.275	–	0.4	–	ns
t_{HCDDR}	t_{KHIX}	Double data rate control hold after clock (K/$\overline{K}$) rise ($\overline{BWS_0}$, $\overline{BWS_1}$, $\overline{BWS_2}$, $\overline{BWS_3}$)	0.18	–	0.22	–	0.28	–	ns
t_{HD}	t_{KHDX}	$D_{[X:0]}$ hold after clock (K/$\overline{K}$) rise	0.18	–	0.22	–	0.28	–	ns

Notes

30. Unless otherwise noted, test conditions assume signal transition time of 2 V/ns, timing reference levels of 0.75 V, V_{REF} = 0.75 V, RQ = 250 Ω, V_{DDQ} = 1.5 V, input pulse levels of 0.25 V to 1.25 V, and output loading of the specified I_{OL}/I_{OH} and load capacitance shown in (a) of Figure 5 on page 22.
31. When a part with a maximum frequency above 400 MHz is operating at a lower clock frequency, it requires the input timings of the frequency range in which it is being operated and outputs data with the output timings of that frequency range.
32. This part has an internal voltage regulator; t_{POWER} is the time that the power is supplied above $V_{DD(min)}$ initially before a read or write operation can be initiated.

Switching Characteristics *(continued)*

Over the Operating Range

Parameters [30, 31]		Description	550 MHz		450 MHz		400 MHz		Unit
Cypress Parameter	Consortium Parameter		Min	Max	Min	Max	Min	Max	
Output Times									
t_{CO}	t_{CHQV}	K/$\overline{K}$ clock rise to data valid	–	0.45	–	0.45	–	0.45	ns
t_{DOH}	t_{CHQX}	Data output hold after output K/$\overline{K}$ clock rise (active to active)	–0.45	–	–0.45	–	–0.45	–	ns
t_{CCQO}	t_{CHCQV}	K/$\overline{K}$ clock rise to echo clock valid	–	0.45	–	0.45	–	0.45	ns
t_{CQOH}	t_{CHCQX}	Echo clock hold after K/$\overline{K}$ clock rise	–0.45	–	–0.45	–	–0.45	–	ns
t_{CQD}	t_{CQHQV}	Echo clock high to data valid	–	0.15	–	0.15	–	0.20	ns
t_{CQDOH}	t_{CQHQX}	Echo clock high to data invalid	–0.15	–	–0.15	–	–0.20	–	ns
t_{CQH}	t_{CQHCQL}	Output clock (CQ/$\overline{CQ}$) HIGH [33]	0.655	–	0.85	–	1.00	–	ns
$t_{CQH\overline{CQ}H}$	$t_{CQH\overline{CQ}H}$	CQ clock rise to $\overline{CQ}$ clock rise (rising edge to rising edge) [33]	0.655	–	0.85	–	1.00	–	ns
t_{CHZ}	t_{CHQZ}	Clock (K/$\overline{K}$) rise to high Z (active to high Z) [34, 35]	–	0.45	–	0.45	–	0.45	ns
t_{CLZ}	t_{CHQX1}	Clock (K/$\overline{K}$) rise to low Z [34, 35]	–0.45	–	–0.45	–	–0.45	–	ns
t_{QVLD}	$t_{CQHQVLD}$	Echo clock high to QVLD valid [36]	–0.15	0.15	–0.15	0.15	–0.20	0.20	ns
PLL Timing									
$t_{KC\ Var}$	$t_{KC\ Var}$	Clock phase jitter	–	0.15	–	0.15	–	0.20	ns
$t_{KC\ lock}$	$t_{KC\ lock}$	PLL lock time (K)	20	–	20	–	20	–	µs
$t_{KC\ Reset}$	$t_{KC\ Reset}$	K static to PLL reset [37]	30	–	30	–	30	–	ns

Notes

33. These parameters are extrapolated from the input timing parameters ($t_{CYC}/2$ – 250 ps, where 250 ps is the internal jitter). These parameters are only guaranteed by design and are not tested in production.
34. t_{CHZ}, t_{CLZ} are specified with a load capacitance of 5 pF as in (b) of Figure 5 on page 22. Transition is measured ±100 mV from steady-state voltage.
35. At any voltage and temperature t_{CHZ} is less than t_{CLZ} and t_{CHZ} less than t_{CO}.
36. t_{QVLD} specification is applicable for both rising and falling edges of QVLD signal.
37. Hold to $>V_{IH}$ or $<V_{IL}$.

Switching Waveforms

Read/Write/Deselect Sequence

Figure 6. Waveform for 2.5 Cycle Read Latency [38, 39, 40]

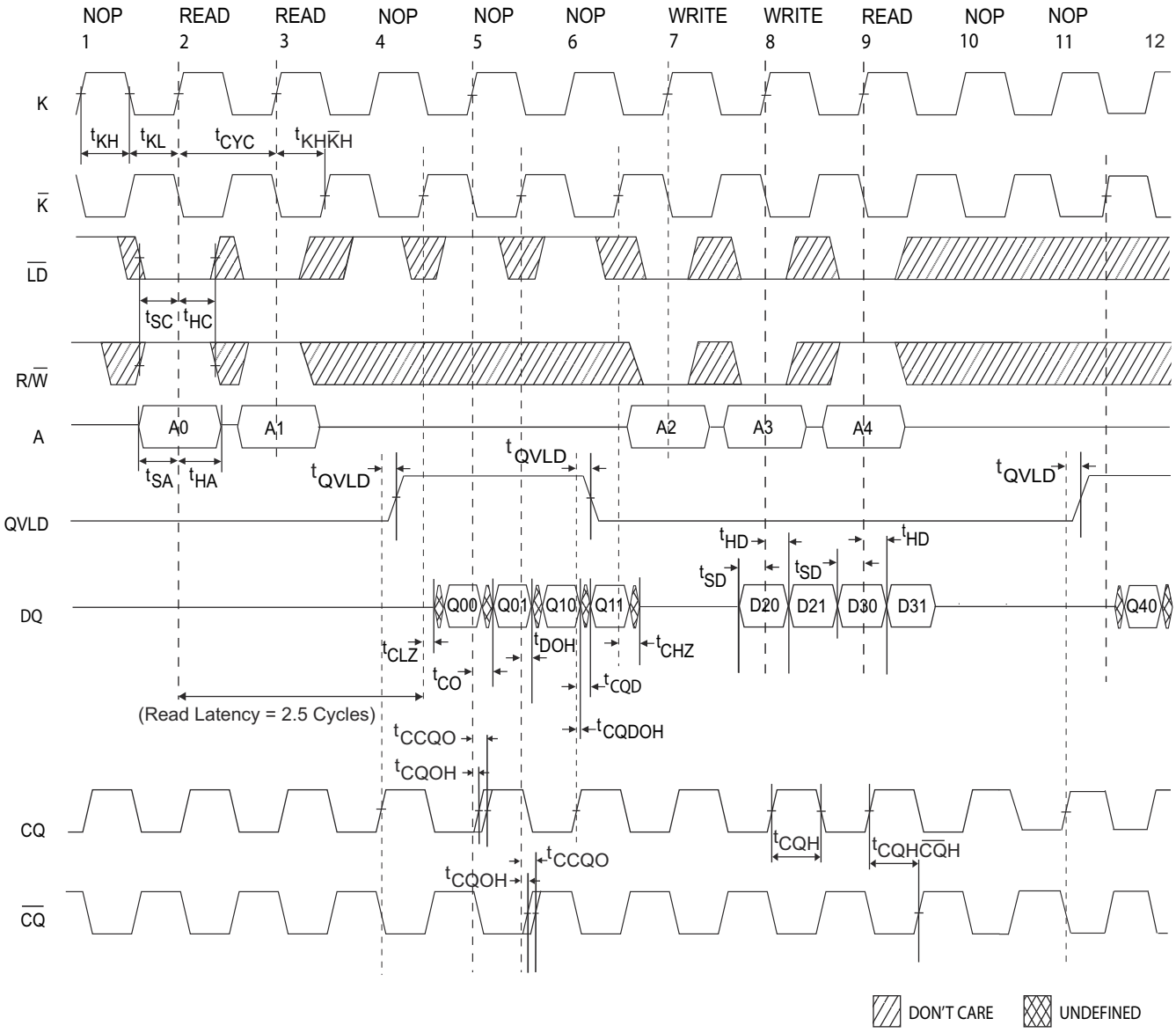

Notes

38. Q00 refers to output from address A0. Q01 refers to output from the next internal burst address following A0, that is, A0 + 1.
39. Outputs are disabled (high Z) one clock cycle after a NOP.
40. In this example, if address A4 = A3, then data Q40 = D30 and Q41 = D31. Write data is forwarded immediately as read results. This note applies to the whole diagram.

Ordering Information

The following table contains only the parts that are currently available. If you do not see what you are looking for, contact your local sales representative. For more information, visit the Cypress website at www.cypress.com and refer to the product summary page at http://www.cypress.com/products

Cypress maintains a worldwide network of offices, solution centers, manufacturer's representatives and distributors. To find the office closest to you, visit us at http://www.cypress.com/go/datasheet/offices.

Speed (MHz)	Ordering Code	Package Diagram	Package Type	Operating Range
550	CY7C2268KV18-550BZC	51-85180	165-ball FBGA (13 × 15 × 1.4 mm)	Commercial
	CY7C2270KV18-550BZXC		165-ball FBGA (13 × 15 × 1.4 mm) Pb-free	
	CY7C2270KV18-550BZXI		165-ball FBGA (13 × 15 × 1.4 mm) Pb-free	Industrial
400	CY7C2270KV18-400BZXC	51-85180	165-ball FBGA (13 × 15 × 1.4 mm) Pb-free	Commercial

Ordering Code Definitions

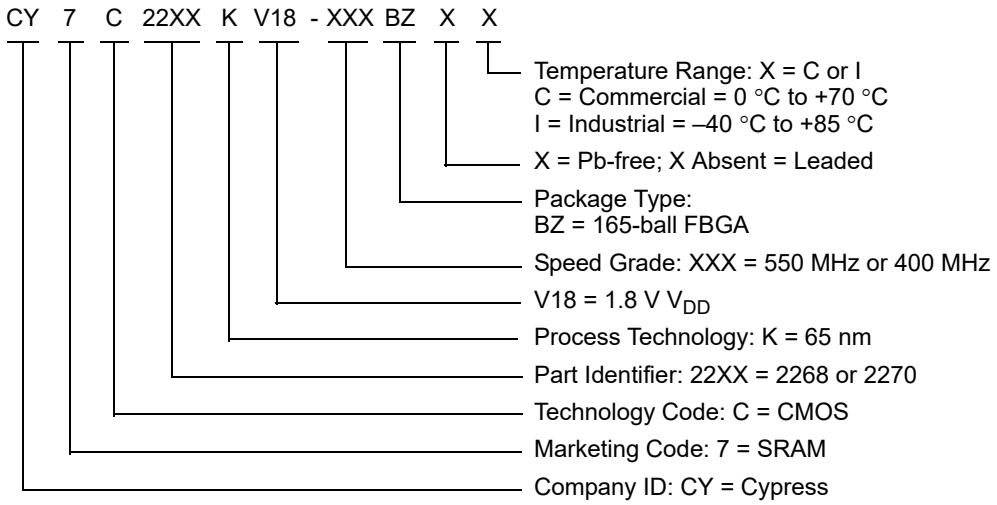

Package Diagram

Figure 7. 165-ball FBGA (13 × 15 × 1.4 mm) BB165D/BW165D (0.5 Ball Diameter) Package Outline, 51-85180

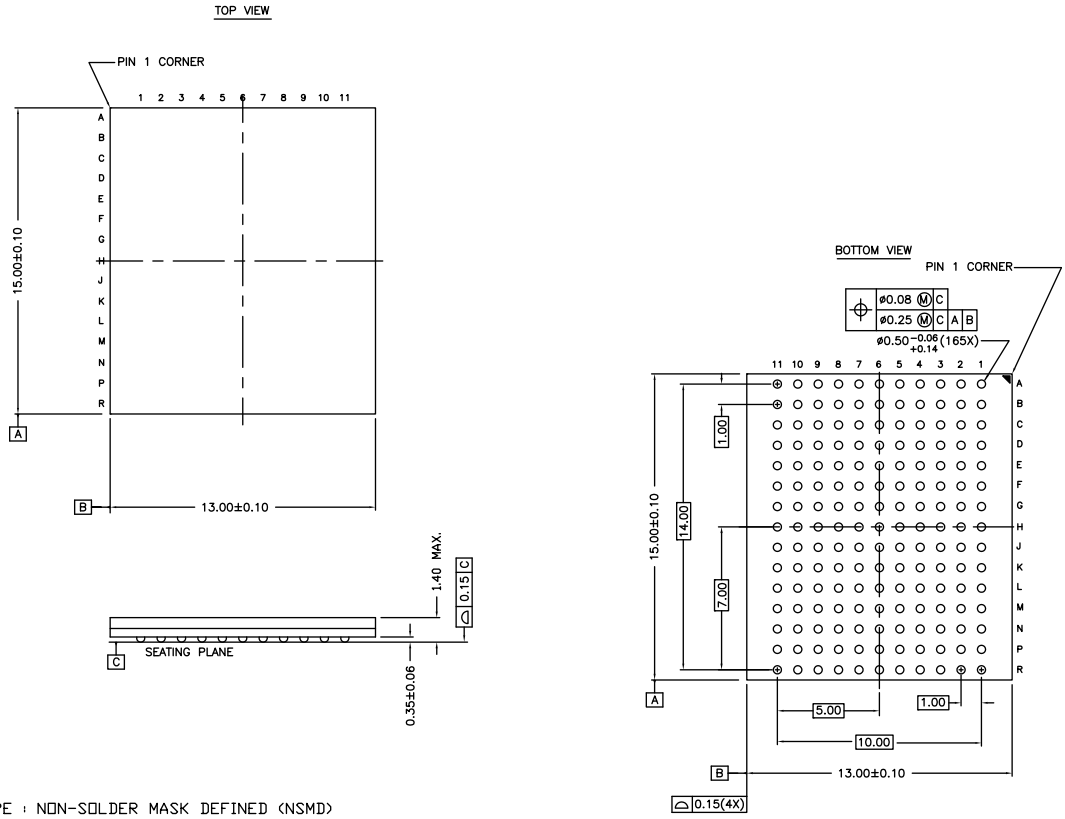

NOTES :
SOLDER PAD TYPE : NON-SOLDER MASK DEFINED (NSMD)
JEDEC REFERENCE : MO-216 / ISSUE E
PACKAGE CODE : BB0AC/BW0AC
PACKAGE WEIGHT : SEE CYPRESS PACKAGE MATERIAL DECLARATION DATASHEET (PMDD) POSTED ON THE CYPRESS WEB.

51-85180 *G

Acronyms

Acronym	Description
DDR	Double Data Rate
EIA	Electronic Industries Alliance
FBGA	Fine-Pitch Ball Grid Array
HSTL	High-Speed Transceiver Logic
I/O	Input/Output
JEDEC	Joint Electron Devices Engineering Council
JTAG	Joint Test Action Group
LMBU	Logical Multiple Bit Upset
LSB	Least Significant Bit
LSBU	Logical Single Bit Upset
MSB	Most Significant Bit
ODT	On-Die Termination
PLL	Phase Locked Loop
QDR	Quad Data Rate
SEL	Single Event Latch-up
SRAM	Static Random Access Memory
TAP	Test Access Port
TCK	Test Clock
TDI	Test Data-In
TDO	Test Data-Out
TMS	Test Mode Select

Document Conventions

Units of Measure

Symbol	Unit of Measure
°C	degree Celsius
MHz	megahertz
µA	microampere
µs	microsecond
mA	milliampere
mm	millimeter
ms	millisecond
ns	nanosecond
Ω	ohm
%	percent
pF	picofarad
ps	picosecond
V	volt
W	watt

Document History Page

Document Title: CY7C2268KV18/CY7C2270KV18, 36-Mbit DDR II+ SRAM Two-Word Burst Architecture (2.5 Cycle Read Latency) with ODT Document Number: 001-57845				
Rev.	**ECN No.**	**Orig. Of Change**	**Submission Date**	**Description Of Change**
**	2816636	VKN / AESA	11/30/2009	New data sheet.
*A	3068547	NJY	10/22/2010	Changed status from Preliminary to Final. Updated Ordering Information (Updated part numbers) and added Ordering Code Definitions. Updated Package Diagram. Minor edits. Updated to new template.
*B	3442282	PRIT	11/22/2011	Updated Package Diagram. Added Acronyms and Units of Measure.
*C	3608092	AVIA / PRIT	05/04/2012	Updated Features (Removed CY7C2266KV18, CY7C2277KV18 related information). Updated Configurations (Removed CY7C2266KV18, CY7C2277KV18 related information). Updated Functional Description (Removed CY7C2266KV18, CY7C2277KV18 related information). Updated Selection Guide (Removed 500 MHz frequency related information, updated value of Maximum operating current for × 18 as “Not Offered” for 400 MHz frequency, updated value of Maximum operating current for × 36 as “Not Offered” for 450 MHz frequency, removed CY7C2266KV18, CY7C2277KV18 related information). Removed Logic Block Diagram – CY7C2266KV18. Removed Logic Block Diagram – CY7C2277KV18. Updated Pin Configurations (Removed CY7C2266KV18, CY7C2277KV18 related information). Updated Pin Definitions (Removed CY7C2266KV18, CY7C2277KV18 related information). Updated Functional Overview (Removed CY7C2266KV18, CY7C2277KV18 related information). Updated Truth Table (Removed CY7C2266KV18, CY7C2277KV18 related information). Updated Write Cycle Descriptions (Removed CY7C2266KV18 related information). Removed Write Cycle Descriptions (Corresponding to CY7C2277KV18). Updated Identification Register Definitions (Removed CY7C2266KV18, CY7C2277KV18 related information). Updated Operating Range (Removed Industrial Temperature Range). Updated Electrical Characteristics (Updated DC Electrical Characteristics (Removed 500 MHz frequency related information, removed I_{DD} and I_{SB1} parameter details corresponding to × 18 for 400 MHz frequency, removed I_{DD} and I_{SB1} parameter details corresponding to × 36 for 450 MHz frequency, removed CY7C2266KV18, CY7C2277KV18 related information)). Updated Switching Characteristics (Removed 500 MHz frequency related information). Updated Package Diagram (spec 51-85180 (changed revision from *D to *E)).
*D	3747296	PRIT	09/18/2012	Updated Operating Range (Included Industrial Temperature Range). Updated Ordering Information (Updated part numbers). Updated Package Diagram (spec 51-85180 (changed revision from *E to *F)).
*E	3789642	PRIT	10/22/2012	No technical updates. Completing Sunset Review.

Document History Page *(continued)*

Document Title: CY7C2268KV18/CY7C2270KV18, 36-Mbit DDR II+ SRAM Two-Word Burst Architecture (2.5 Cycle Read Latency) with ODT Document Number: 001-57845				
Rev.	**ECN No.**	**Orig. Of Change**	**Submission Date**	**Description Of Change**
*F	4374845	PRIT	05/09/2014	Updated Application Example: Updated Figure 2. Updated Thermal Resistance: Updated values of Θ_{JA} parameter. Included Θ_{JB} parameter and its details. Updated to new template.
*G	4567876	PRIT	11/12/2014	Updated Functional Description: Added “For a complete list of related documentation, click here.” at the end. Updated Ordering Information: Updated part numbers.
*H	5061971	PRIT	12/23/2015	Updated Package Diagram: spec 51-85180 – Changed revision from *F to *G. Updated to new template. Completing Sunset Review.
*I	6013850	RMES	01/04/2018	Updated to new template. Completing Sunset Review.

Sales, Solutions, and Legal Information

Worldwide Sales and Design Support

Cypress maintains a worldwide network of offices, solution centers, manufacturer's representatives, and distributors. To find the office closest to you, visit us at Cypress Locations.

Products

Arm® Cortex® Microcontrollers	cypress.com/arm
Automotive	cypress.com/automotive
Clocks & Buffers	cypress.com/clocks
Interface	cypress.com/interface
Internet of Things	cypress.com/iot
Memory	cypress.com/memory
Microcontrollers	cypress.com/mcu
PSoC	cypress.com/psoc
Power Management ICs	cypress.com/pmic
Touch Sensing	cypress.com/touch
USB Controllers	cypress.com/usb
Wireless Connectivity	cypress.com/wireless

PSoC® Solutions

PSoC 1 | PSoC 3 | PSoC 4 | PSoC 5LP | PSoC 6 MCU

Cypress Developer Community

Community | Projects | Video | Blogs | Training | Components

Technical Support

cypress.com/support

© Cypress Semiconductor Corporation, 2009-2018. This document is the property of Cypress Semiconductor Corporation and its subsidiaries, including Spansion LLC ("Cypress"). This document, including any software or firmware included or referenced in this document ("Software"), is owned by Cypress under the intellectual property laws and treaties of the United States and other countries worldwide. Cypress reserves all rights under such laws and treaties and does not, except as specifically stated in this paragraph, grant any license under its patents, copyrights, trademarks, or other intellectual property rights. If the Software is not accompanied by a license agreement and you do not otherwise have a written agreement with Cypress governing the use of the Software, then Cypress hereby grants you a personal, non-exclusive, nontransferable license (without the right to sublicense) (1) under its copyright rights in the Software (a) for Software provided in source code form, to modify and reproduce the Software solely for use with Cypress hardware products, only internally within your organization, and (b) to distribute the Software in binary code form externally to end users (either directly or indirectly through resellers and distributors), solely for use on Cypress hardware product units, and (2) under those claims of Cypress's patents that are infringed by the Software (as provided by Cypress, unmodified) to make, use, distribute, and import the Software solely for use with Cypress hardware products. Any other use, reproduction, modification, translation, or compilation of the Software is prohibited.

TO THE EXTENT PERMITTED BY APPLICABLE LAW, CYPRESS MAKES NO WARRANTY OF ANY KIND, EXPRESS OR IMPLIED, WITH REGARD TO THIS DOCUMENT OR ANY SOFTWARE OR ACCOMPANYING HARDWARE, INCLUDING, BUT NOT LIMITED TO, THE IMPLIED WARRANTIES OF MERCHANTABILITY AND FITNESS FOR A PARTICULAR PURPOSE. To the extent permitted by applicable law, Cypress reserves the right to make changes to this document without further notice. Cypress does not assume any liability arising out of the application or use of any product or circuit described in this document. Any information provided in this document, including any sample design information or programming code, is provided only for reference purposes. It is the responsibility of the user of this document to properly design, program, and test the functionality and safety of any application made of this information and any resulting product. Cypress products are not designed, intended, or authorized for use as critical components in systems designed or intended for the operation of weapons, weapons systems, nuclear installations, life-support devices or systems, other medical devices or systems (including resuscitation equipment and surgical implants), pollution control or hazardous substances management, or other uses where the failure of the device or system could cause personal injury, death, or property damage ("Unintended Uses"). A critical component is any component of a device or system whose failure to perform can be reasonably expected to cause the failure of the device or system, or to affect its safety or effectiveness. Cypress is not liable, in whole or in part, and you shall and hereby do release Cypress from any claim, damage, or other liability arising from or related to all Unintended Uses of Cypress products. You shall indemnify and hold Cypress harmless from and against all claims, costs, damages, and other liabilities, including claims for personal injury or death, arising from or related to any Unintended Uses of Cypress products.

Cypress, the Cypress logo, Spansion, the Spansion logo, and combinations thereof, WICED, PSoC, CapSense, EZ-USB, F-RAM, and Traveo are trademarks or registered trademarks of Cypress in the United States and other countries. For a more complete list of Cypress trademarks, visit cypress.com. Other names and brands may be claimed as property of their respective owners.

QDR RAMs and Quad Data Rate RAMs comprise a new family of products developed by Cypress, IDT, NEC, Renesas, and Samsung.

Компания «ЭлектроПласт» предлагает заключение долгосрочных отношений при поставках импортных электронных компонентов на взаимовыгодных условиях!

Наши преимущества:

- Оперативные поставки широкого спектра электронных компонентов отечественного и импортного производства напрямую от производителей и с крупнейших мировых складов;
- Поставка более 17-ти миллионов наименований электронных компонентов;
- Поставка сложных, дефицитных, либо снятых с производства позиций;
- Оперативные сроки поставки под заказ (от 5 рабочих дней);
- Экспресс доставка в любую точку России;
- Техническая поддержка проекта, помощь в подборе аналогов, поставка прототипов;
- Система менеджмента качества сертифицирована по Международному стандарту ISO 9001;
- Лицензия ФСБ на осуществление работ с использованием сведений, составляющих государственную тайну;
- Поставка специализированных компонентов (Xilinx, Altera, Analog Devices, Intersil, Interpoint, Microsemi, Aeroflex, Peregrine, Syfer, Eurofarad, Texas Instrument, Miteq, Cobham, E2V, MA-COM, Hittite, Mini-Circuits,General Dynamics и др.);

Помимо этого, одним из направлений компании «ЭлектроПласт» является направление «Источники питания». Мы предлагаем Вам помощь Конструкторского отдела:

- Подбор оптимального решения, техническое обоснование при выборе компонента;
- Подбор аналогов;
- Консультации по применению компонента;
- Поставка образцов и прототипов;
- Техническая поддержка проекта;
- Защита от снятия компонента с производства.

Как с нами связаться

Телефон: 8 (812) 309 58 32 (многоканальный)
Факс: 8 (812) 320-02-42
Электронная почта: org@eplast1.ru
Адрес: 198099, г. Санкт-Петербург, ул. Калинина, дом 2, корпус 4, литера А.