CY8C27143, CY8C27243, CY8C27443, CY8C27543, and CY8C27643

Features

- **Powerful Harvard Architecture Processor**
  - M8C Processor Speeds to 24 MHz
  - 8x8 Multiply, 32-Bit Accumulate
  - Low Power at High Speed
  - 3.0 to 5.25V Operating Voltage
  - Operating Voltages Down to 1.0V Using On-Chip Switch Mode Pump (SMP)
  - Industrial Temperature Range: -40°C to +85°C
- **Advanced Peripherals (PSoC Blocks)**
  - 12 Rail-to-Rail Analog PSoC Blocks Provide:
    - Up to 14-Bit ADCs
    - Up to 9-Bit DACs
    - Programmable Gain Amplifiers
    - Programmable Filters and Comparators
  - 8 Digital PSoC Blocks Provide:
    - 8- to 32-Bit Timers, Counters, and PWMs
    - CRC and PRS Modules
    - Up to 2 Full-Duplex UARTs
    - Multiple SPI™ Masters or Slaves
    - Connectable to all GPIO Pins
  - Complex Peripherals by Combining Blocks
- **Precision, Programmable Clocking**
  - Internal 2.5% 24/48 MHz Oscillator
  - 24/48 MHz with Optional 32 kHz Crystal
  - Optional External Oscillator, up to 24 MHz
  - Internal Oscillator for Watchdog and Sleep
- **Flexible On-Chip Memory**
  - 16K Flash Program Storage 50,000 Erase/Write Cycles
  - 256 Bytes SRAM Data Storage
  - In-System Serial Programming (ISSP)
  - Partial Flash Updates
  - Flexible Protection Modes
  - EEPROM Emulation in Flash
- **Programmable Pin Configurations**
  - 25 mA Sink on all GPIO
  - Pull up, Pull down, High Z, Strong, or Open Drain Drive Modes on all GPIO
  - Up to 12 Analog Inputs on GPIO
  - Four 30 mA Analog Outputs on GPIO
  - Configurable Interrupt on all GPIO
- **Additional System Resources**
  - I²C™ Slave, Master, and Multi-Master to 400 kHz
  - Watchdog and Sleep Timers
  - User-Configurable Low Voltage Detection
  - Integrated Supervisory Circuit
  - On-Chip Precision Voltage Reference
- **Complete Development Tools**
  - Free Development Software (PSoC Designer™)
  - Full-Featured, In-Circuit Emulator and Programmer
  - Full Speed Emulation
  - Complex Breakpoint Structure
  - 128K Trace Memory

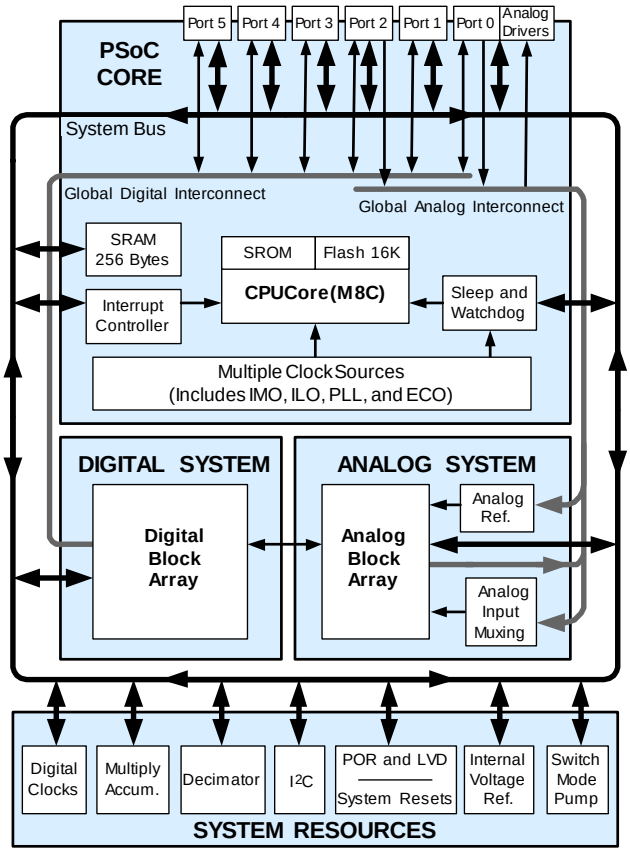

PSoC® Functional Overview

The PSoC® family consists of many *Mixed-Signal Array with On-Chip Controller* devices. These devices are designed to replace multiple traditional MCU-based system components with one, low cost single-chip programmable device. PSoC devices include configurable blocks of analog and digital logic, as well as programmable interconnects. This architecture allows the user to create customized peripheral configurations that match the requirements of each individual application. Additionally, a fast CPU, Flash program memory, SRAM data memory, and configurable IO are included in a range of convenient pinouts and packages.

The PSoC architecture, as illustrated on the left, is comprised of four main areas: PSoC Core, Digital System, Analog System, and System Resources. Configurable global busing allows all the device resources to be combined into a complete custom system. The PSoC CY8C27x43 family can have up to five IO ports that connect to the global digital and analog interconnects, providing access to 8 digital blocks and 12 analog blocks.

The PSoC Core

The PSoC Core is a powerful engine that supports a rich feature set. The core includes a CPU, memory, clocks, and configurable GPIO (General Purpose IO).

The M8C CPU core is a powerful processor with speeds up to 24 MHz, providing a four MIPS 8-bit Harvard architecture micro-

 © Cypress Semiconductor Corp. 2002 - 2006 — Document No. 38-12012 Rev. *K

[+] Feedback

processor. The CPU utilizes an interrupt controller with 17 vectors, to simplify programming of real time embedded events. Program execution is timed and protected using the included Sleep and Watch Dog Timers (WDT).

Memory encompasses 16K of Flash for program storage, 256 bytes of SRAM for data storage, and up to 2K of EEPROM emulated using the Flash. Program Flash utilizes four protection levels on blocks of 64 bytes, allowing customized software IP protection.

The PSoC device incorporates flexible internal clock generators, including a 24 MHz IMO (internal main oscillator) accurate to 2.5% over temperature and voltage. The 24 MHz IMO can also be doubled to 48 MHz for use by the digital system. A low power 32 kHz ILO (internal low speed oscillator) is provided for the Sleep timer and WDT. If crystal accuracy is desired, the ECO (32.768 kHz external crystal oscillator) is available for use as a Real Time Clock (RTC) and can optionally generate a crystal-accurate 24 MHz system clock using a PLL. The clocks, together with programmable clock dividers (as a System Resource), provide the flexibility to integrate almost any timing requirement into the PSoC device.

PSoC GPIOs provide connection to the CPU, digital and analog resources of the device. Each pin's drive mode may be selected from eight options, allowing great flexibility in external interfacing. Every pin also has the capability to generate a system interrupt on high level, low level, and change from last read.

The Digital System

The Digital System is composed of 8 digital PSoC blocks. Each block is an 8-bit resource that can be used alone or combined with other blocks to form 8, 16, 24, and 32-bit peripherals, which are called user module references.

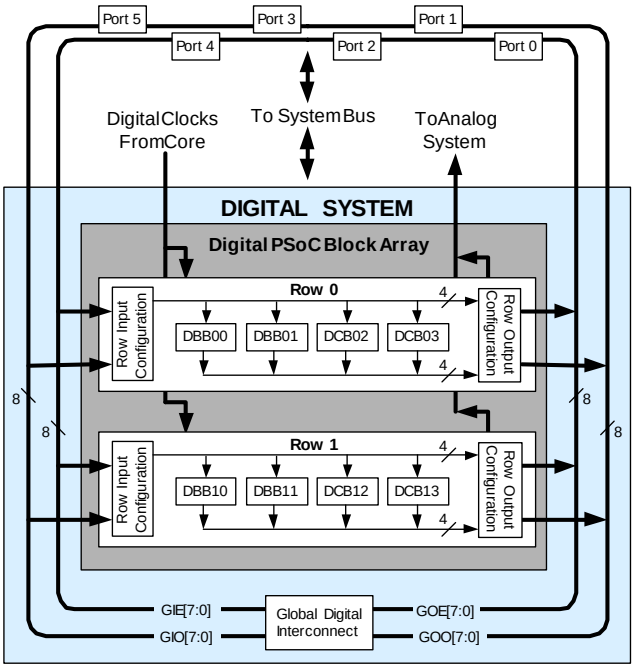

Digital System Block Diagram

Digital peripheral configurations include those listed below.

- PWMs (8 to 32 bit)
- PWMs with Dead band (8 to 32 bit)
- Counters (8 to 32 bit)
- Timers (8 to 32 bit)
- UART 8 bit with selectable parity (up to 2)
- SPI slave and master (up to 2)
- I2C slave and multi-master (1 available as a System Resource)
- Cyclical Redundancy Checker/Generator (8 to 32 bit)
- IrDA (up to 2)
- Pseudo Random Sequence Generators (8 to 32 bit)

The digital blocks can be connected to any GPIO through a series of global buses that can route any signal to any pin. The buses also allow for signal multiplexing and for performing logic operations. This configurability frees your designs from the constraints of a fixed peripheral controller.

Digital blocks are provided in rows of four, where the number of blocks varies by PSoC device family. This allows you the optimum choice of system resources for your application. Family resources are shown in the table titled "PSoC Device Characteristics" on page 3.

The Analog System

The Analog System is composed of 12 configurable blocks, each comprised of an opamp circuit allowing the creation of complex analog signal flows. Analog peripherals are very flexible and can be customized to support specific application requirements. Some of the more common PSoC analog functions (most available as user modules) are listed below.

- Analog-to-digital converters (up to 4, with 6- to 14-bit resolution, selectable as Incremental, Delta Sigma, and SAR)
- Filters (2, 4, 6, and 8 pole band-pass, low-pass, and notch)
- Amplifiers (up to 4, with selectable gain to 48x)
- Instrumentation amplifiers (up to 2, with selectable gain to 93x)
- Comparators (up to 4, with 16 selectable thresholds)
- DACs (up to 4, with 6- to 9-bit resolution)
- Multiplying DACs (up to 4, with 6- to 9-bit resolution)
- High current output drivers (four with 30 mA drive as a Core Resource)
- 1.3V reference (as a System Resource)
- DTMF Dialer
- Modulators
- Correlators
- Peak detectors
- Many other topologies possible

[+] Feedback

Analog blocks are provided in columns of three, which includes one CT (Continuous Time) and two SC (Switched Capacitor) blocks, as shown in the figure below.

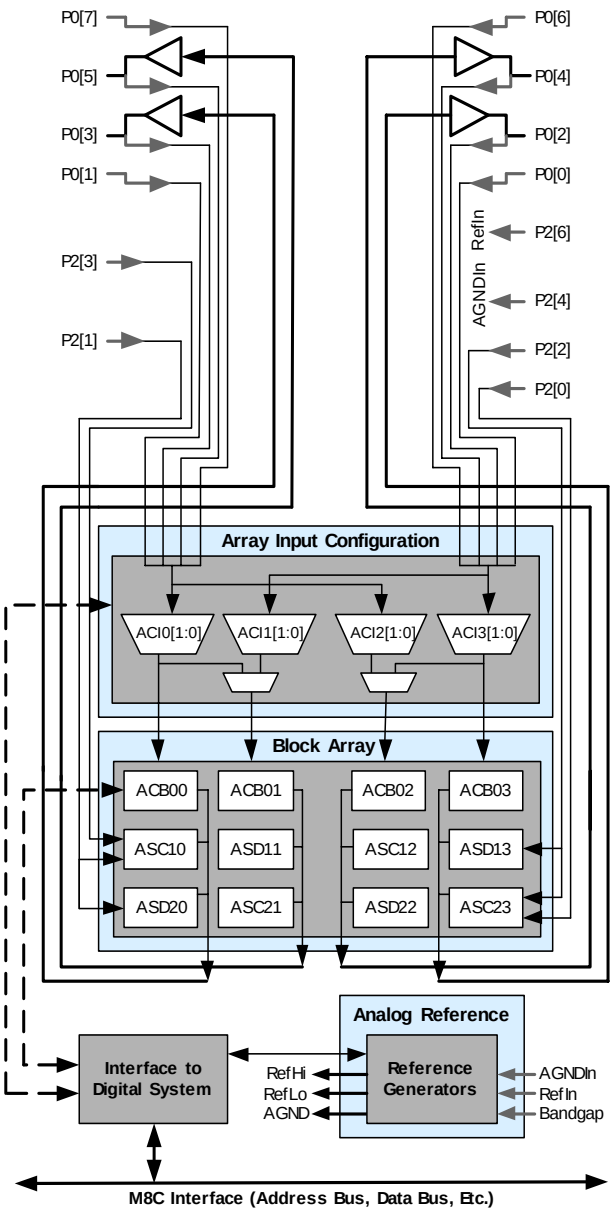

Analog System Block Diagram

Additional System Resources

System Resources, some of which have been previously listed, provide additional capability useful to complete systems. Additional resources include a multiplier, decimator, switch mode pump, low voltage detection, and power on reset. Statements describing the merits of each system resource are below.

- Digital clock dividers provide three customizable clock frequencies for use in applications. The clocks can be routed to both the digital and analog systems. Additional clocks can be generated using digital PSoC blocks as clock dividers.
- Multiply accumulate (MAC) provides fast 8-bit multiplier with 32-bit accumulate, to assist in general math and digital filters.
- The decimator provides a custom hardware filter for digital signal processing applications including the creation of Delta Sigma ADCs.
- The I2C module provides 100 and 400 kHz communication over two wires. Slave, master, and multi-master modes are all supported.
- Low Voltage Detection (LVD) interrupts can signal the application of falling voltage levels, while the advanced POR (Power On Reset) circuit eliminates the need for a system supervisor.
- An internal 1.3V reference provides an absolute reference for the analog system, including ADCs and DACs.
- An integrated switch mode pump (SMP) generates normal operating voltages from a single 1.2V battery cell, providing a low cost boost converter.

PSoC Device Characteristics

Depending on your PSoC device characteristics, the digital and analog systems can have 16, 8, or 4 digital blocks and 12, 6, or 4 analog blocks. The following table lists the resources available for specific PSoC device groups.The PSoC device covered by this data sheet is highlighted below.

PSoC Device Characteristics

PSoC Part Number	Digital IO	Digital Rows	Digital Blocks	Analog Inputs	Analog Outputs	Analog Columns	Analog Blocks	SRAM Size	Flash Size
CY8C29x66	up to 64	4	16	12	4	4	12	2K	32K
CY8C27x43	up to 44	2	8	12	4	4	12	256 Bytes	16K
CY8C24x94	49	1	4	48	2	2	6	1K	16K
CY8C24x23	up to 24	1	4	12	2	2	6	256 Bytes	4K
CY8C24x23A	up to 24	1	4	12	2	2	6	256 Bytes	4K
CY8C21x34	up to 28	1	4	28	0	2	4[a]	512 Bytes	8K
CY8C21x23	16	1	4	8	0	2	4[a]	256 Bytes	4K
CY8C20x34	up to 28	0	0	28	0	0	3[b]	512 Bytes	8K

a. Limited analog functionality.
b. Two analog blocks and one CapSense.

[+] Feedback

Getting Started

The quickest path to understanding the PSoC silicon is by reading this data sheet and using the PSoC Designer Integrated Development Environment (IDE). This data sheet is an overview of the PSoC integrated circuit and presents specific pin, register, and electrical specifications. For in-depth information, along with detailed programming information, reference the *PSoC Mixed-Signal Array Technical Reference Manual*.

For up-to-date Ordering, Packaging, and Electrical Specification information, reference the latest PSoC device data sheets on the web at http://www.cypress.com/psoc.

Development Kits

Development Kits are available from the following distributors: Digi-Key, Avnet, Arrow, and Future. The Cypress Online Store contains development kits, **C** compilers, and all accessories for PSoC development. Go to the Cypress Online Store web site at http://www.cypress.com, click the Online Store shopping cart icon at the bottom of the web page, and click *PSoC (Programmable System-on-Chip)* to view a current list of available items.

Technical Training

Free PSoC technical training is available for beginners and is taught by a marketing or application engineer over the phone. PSoC training classes cover designing, debugging, advanced analog, as well as application-specific classes covering topics such as PSoC and the LIN bus. Go to http://www.cypress.com, click on Design Support located on the left side of the web page, and select Technical Training for more details.

Consultants

Certified PSoC Consultants offer everything from technical assistance to completed PSoC designs. To contact or become a PSoC Consultant go to http://www.cypress.com, click on Design Support located on the left side of the web page, and select CYPros Consultants.

Technical Support

PSoC application engineers take pride in fast and accurate response. They can be reached with a 4-hour guaranteed response at http://www.cypress.com/support/login.cfm.

Application Notes

A long list of application notes will assist you in every aspect of your design effort. To view the PSoC application notes, go to the http://www.cypress.com web site and select Application Notes under the Design Resources list located in the center of the web page. Application Notes are sorted by date by default.

Development Tools

PSoC Designer is a Microsoft® Windows-based, integrated development environment for the Programmable System-on-Chip (PSoC) devices. The PSoC Designer IDE and application runs on Windows NT 4.0, Windows 2000, Windows Millennium (Me), or Windows XP. (Reference the PSoC Designer Functional Flow diagram below.)

PSoC Designer helps the customer to select an operating configuration for the PSoC, write application code that uses the PSoC, and debug the application. This system provides design database management by project, an integrated debugger with In-Circuit Emulator, in-system programming support, and the CYASM macro assembler for the CPUs.

PSoC Designer also supports a high-level C language compiler developed specifically for the devices in the family.

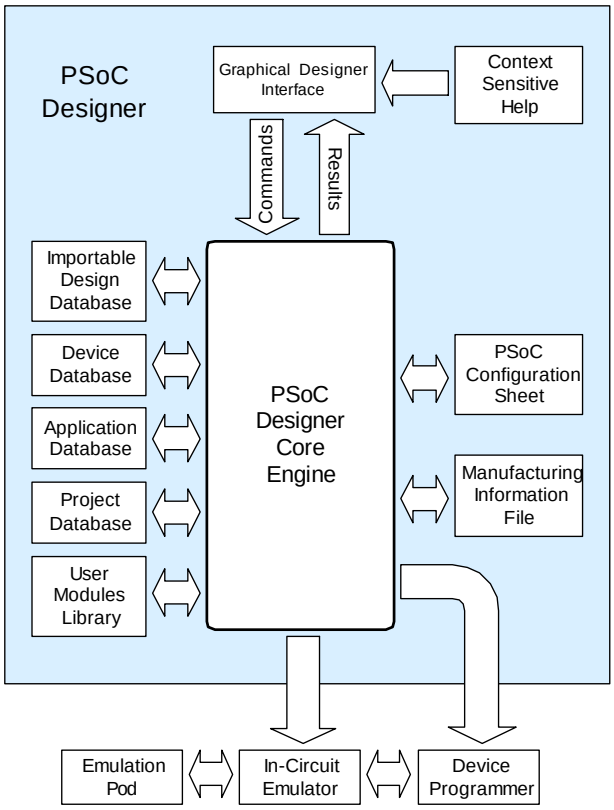

PSoC Designer Subsystems

[+] Feedback

PSoC Designer Software Subsystems

Device Editor

The Device Editor subsystem allows the user to select different onboard analog and digital components called user modules using the PSoC blocks. Examples of user modules are ADCs, DACs, Amplifiers, and Filters.

The device editor also supports easy development of multiple configurations and dynamic reconfiguration. Dynamic configuration allows for changing configurations at run time.

PSoC Designer sets up power-on initialization tables for selected PSoC block configurations and creates source code for an application framework. The framework contains software to operate the selected components and, if the project uses more than one operating configuration, contains routines to switch between different sets of PSoC block configurations at run time. PSoC Designer can print out a configuration sheet for a given project configuration for use during application programming in conjunction with the Device Data Sheet. Once the framework is generated, the user can add application-specific code to flesh out the framework. It's also possible to change the selected components and regenerate the framework.

Design Browser

The Design Browser allows users to select and import preconfigured designs into the user's project. Users can easily browse a catalog of preconfigured designs to facilitate time-to-design. Examples provided in the tools include a 300-baud modem, LIN Bus master and slave, fan controller, and magnetic card reader.

Application Editor

In the Application Editor you can edit your C language and Assembly language source code. You can also assemble, compile, link, and build.

Assembler. The macro assembler allows the assembly code to be merged seamlessly with C code. The link libraries automatically use absolute addressing or can be compiled in relative mode, and linked with other software modules to get absolute addressing.

C Language Compiler. A C language compiler is available that supports Cypress MicroSystems' PSoC family devices. Even if you have never worked in the C language before, the product quickly allows you to create complete C programs for the PSoC family devices.

The embedded, optimizing C compiler provides all the features of C tailored to the PSoC architecture. It comes complete with embedded libraries providing port and bus operations, standard keypad and display support, and extended math functionality.

Debugger

The PSoC Designer Debugger subsystem provides hardware in-circuit emulation, allowing the designer to test the program in a physical system while providing an internal view of the PSoC device. Debugger commands allow the designer to read and program and read and write data memory, read and write IO registers, read and write CPU registers, set and clear breakpoints, and provide program run, halt, and step control. The debugger also allows the designer to create a trace buffer of registers and memory locations of interest.

Online Help System

The online help system displays online, context-sensitive help for the user. Designed for procedural and quick reference, each functional subsystem has its own context-sensitive help. This system also provides tutorials and links to FAQs and an Online Support Forum to aid the designer in getting started.

Hardware Tools

In-Circuit Emulator

A low cost, high functionality ICE (In-Circuit Emulator) is available for development support. This hardware has the capability to program single devices.

The emulator consists of a base unit that connects to the PC by way of the parallel or USB port. The base unit is universal and will operate with all PSoC devices. Emulation pods for each device family are available separately. The emulation pod takes the place of the PSoC device in the target board and performs full speed (24 MHz) operation.

[+] Feedback

Designing with User Modules

The development process for the PSoC device differs from that of a traditional fixed function microprocessor. The configurable analog and digital hardware blocks give the PSoC architecture a unique flexibility that pays dividends in managing specification change during development and by lowering inventory costs. These configurable resources, called PSoC Blocks, have the ability to implement a wide variety of user-selectable functions. Each block has several registers that determine its function and connectivity to other blocks, multiplexers, buses, and to the IO pins. Iterative development cycles permit you to adapt the hardware as well as the software. This substantially lowers the risk that you will have to select a different part to meet the final design requirements.

To speed the development process, the PSoC Designer Integrated Development Environment (IDE) provides a library of pre-built, pre-tested hardware peripheral functions, called “User Modules.” User modules make selecting and implementing peripheral devices simple, and come in analog, digital, and mixed signal varieties. The standard User Module library contains over 50 common peripherals such as ADCs, DACs Timers, Counters, UARTs, and other not-so common peripherals such as DTMF Generators and Bi-Quad analog filter sections.

Each user module establishes the basic register settings that implement the selected function. It also provides parameters that allow you to tailor its precise configuration to your particular application. For example, a Pulse Width Modulator User Module configures one or more digital PSoC blocks, one for each 8 bits of resolution. The user module parameters permit you to establish the pulse width and duty cycle. User modules also provide tested software to cut your development time. The user module application programming interface (API) provides high-level functions to control and respond to hardware events at run-time. The API also provides optional interrupt service routines that you can adapt as needed.

The API functions are documented in user module data sheets that are viewed directly in the PSoC Designer IDE. These data sheets explain the internal operation of the user module and provide performance specifications. Each data sheet describes the use of each user module parameter and documents the setting of each register controlled by the user module.

The development process starts when you open a new project and bring up the Device Editor, a graphical user interface (GUI) for configuring the hardware. You pick the user modules you need for your project and map them onto the PSoC blocks with point-and-click simplicity. Next, you build signal chains by interconnecting user modules to each other and the IO pins. At this stage, you also configure the clock source connections and enter parameter values directly or by selecting values from drop-down menus. When you are ready to test the hardware configuration or move on to developing code for the project, you perform the “Generate Application” step. This causes PSoC Designer to generate source code that automatically configures the device to your specification and provides the high-level user module API functions.

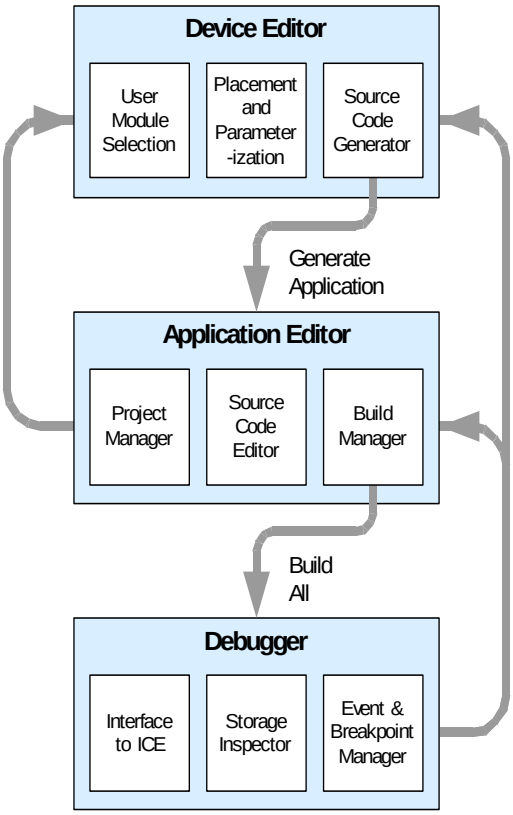

User Module and Source Code Development Flows

The next step is to write your main program, and any sub-routines using PSoC Designer’s Application Editor subsystem. The Application Editor includes a Project Manager that allows you to open the project source code files (including all generated code files) from a hierarchal view. The source code editor provides syntax coloring and advanced edit features for both C and assembly language. File search capabilities include simple string searches and recursive “grep-style” patterns. A single mouse click invokes the Build Manager. It employs a professional-strength “makefile” system to automatically analyze all file dependencies and run the compiler and assembler as necessary. Project-level options control optimization strategies used by the compiler and linker. Syntax errors are displayed in a console window. Double clicking the error message takes you directly to the offending line of source code. When all is correct, the linker builds a HEX file image suitable for programming.

The last step in the development process takes place inside the PSoC Designer’s Debugger subsystem. The Debugger downloads the HEX image to the In-Circuit Emulator (ICE) where it runs at full speed. Debugger capabilities rival those of systems costing many times more. In addition to traditional single-step, run-to-breakpoint and watch-variable features, the Debugger provides a large trace buffer and allows you define complex breakpoint events that include monitoring address and data bus values, memory locations and external signals.

[+] Feedback

Document Conventions

Acronyms Used

The following table lists the acronyms that are used in this document.

Acronym	Description
AC	alternating current
ADC	analog-to-digital converter
API	application programming interface
CPU	central processing unit
CT	continuous time
DAC	digital-to-analog converter
DC	direct current
ECO	external crystal oscillator
EEPROM	electrically erasable programmable read-only memory
FSR	full scale range
GPIO	general purpose IO
GUI	graphical user interface
HBM	human body model
ICE	in-circuit emulator
ILO	internal low speed oscillator
IMO	internal main oscillator
IO	input/output
IPOR	imprecise power on reset
LSb	least-significant bit
LVD	low voltage detect
MSb	most-significant bit
PC	program counter
PLL	phase-locked loop
POR	power on reset
PPOR	precision power on reset
PSoC®	Programmable System-on-Chip™
PWM	pulse width modulator
SC	switched capacitor
SLIMO	slow IMO
SMP	switch mode pump
SRAM	static random access memory

Units of Measure

A units of measure table is located in the Electrical Specifications section. Table 3-1 on page 19 lists all the abbreviations used to measure the PSoC devices.

Numeric Naming

Hexidecimal numbers are represented with all letters in uppercase with an appended lowercase ‘h’ (for example, ‘14h’ or ‘3Ah’). Hexidecimal numbers may also be represented by a ‘0x’ prefix, the C coding convention. Binary numbers have an appended lowercase ‘b’ (e.g., 01010100b’ or ‘01000011b’). Numbers not indicated by an ‘h’ or ‘b’ are decimal.

Table of Contents

For an in depth discussion and more information on your PSoC device, obtain the *PSoC Mixed-Signal Array Technical Reference Manual* on http://www.cypress.com. This document is organized into the following chapters and sections.

1. Pin Information 8
1.1 Pinouts 8
1.1.1 8-Pin Part Pinout 8
1.1.2 20-Pin Part Pinout 9
1.1.3 28-Pin Part Pinout 10
1.1.4 44-Pin Part Pinout 11
1.1.5 48-Pin Part Pinouts 12
1.1.6 56-Pin Part Pinout 14

2. Register Reference 16
2.1 Register Conventions 16
2.2 Register Mapping Tables 16

3. Electrical Specifications 19
3.1 Absolute Maximum Ratings 20
3.2 Operating Temperature 20
3.3 DC Electrical Characteristics 21
3.3.1 DC Chip-Level Specifications 21
3.3.2 DC General Purpose IO Specifications 21
3.3.3 DC Operational Amplifier Specifications 22
3.3.4 DC Low Power Comparator Specifications 23
3.3.5 DC Analog Output Buffer Specifications 24
3.3.6 DC Switch Mode Pump Specifications 25
3.3.7 DC Analog Reference Specifications 26
3.3.8 DC Analog PSoC Block Specifications 28
3.3.9 DC POR and LVD Specifications 28
3.3.10 DC Programming Specifications 29
3.4 AC Electrical Characteristics 30
3.4.1 AC Chip-Level Specifications 30
3.4.2 AC General Purpose IO Specifications 32
3.4.3 AC Operational Amplifier Specifications 33
3.4.4 AC Low Power Comparator Specifications 35
3.4.5 AC Digital Block Specifications 35
3.4.6 AC Analog Output Buffer Specifications 36
3.4.7 AC External Clock Specifications 37
3.4.8 AC Programming Specifications 37
3.4.9 AC I2C Specifications 38

4. Packaging Information 39
4.1 Packaging Dimensions 39
4.2 Thermal Impedances 44
4.3 Capacitance on Crystal Pins 44
4.4 Solder Reflow Peak Temperature 44

5. Development Tool Selection 45
5.1 Software 45
5.1.1 PSoC Designer 45
5.1.2 PSoC Express 45
5.1.3 PSoC Programmer 45
5.1.4 CY3202-C iMAGEcraft C Compiler 45
5.2 Development Kits 45
5.2.1 CY3215-DK Basic Development Kit 45
5.2.2 CY3210-ExpressDK Development Kit 46
5.3 Evaluation Tools 46
5.3.1 CY3210-MiniProg1 46
5.3.2 CY3210-PSoCEval1 46
5.3.3 CY3214-PSoCEvalUSB 46
5.4 Device Programmers 46
5.4.1 CY3216 Modular Programmer 46
5.4.2 CY3207ISSP Serial Programmer (ISSP) 46
5.5 Accessories (Emulation and Programming) 47
5.6 3rd-Party Tools 47
5.7 Build a PSoC Emulator into Your Board 47

6. Ordering Information 48
6.1 Ordering Code Definitions 49

7. Sales and Service Information 50
7.1 Revision History 50
7.2 Copyrights and Code Protection 51

[+] Feedback

1. Pin Information

This chapter describes, lists, and illustrates the CY8C27x43 PSoC device pins and pinout configurations.

1.1 Pinouts

The CY8C27x43 PSoC device is available in a variety of packages which are listed and illustrated in the following tables. Every port pin (labeled with a “P”) is capable of Digital IO. However, Vss, Vdd, SMP, and XRES are not capable of Digital IO.

1.1.1 8-Pin Part Pinout

Table 1-1. 8-Pin Part Pinout (PDIP)

Pin No.	Type		Pin Name	Description
	Digital	Analog		
1	IO	IO	P0[5]	Analog column mux input and column output.
2	IO	IO	P0[3]	Analog column mux input and column output.
3	IO		P1[1]	Crystal Input (XTALin), I2C Serial Clock (SCL), ISSP-SCLK*.
4	Power		Vss	Ground connection.
5	IO		P1[0]	Crystal Output (XTALout), I2C Serial Data (SDA), ISSP-SDATA*.
6	IO	IO	P0[2]	Analog column mux input and column output.
7	IO	IO	P0[4]	Analog column mux input and column output.
8	Power		Vdd	Supply voltage.

CY8C27143 8-Pin PSoC Device

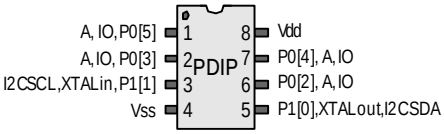

LEGEND: A = Analog, I = Input, and O = Output.
* These are the ISSP pins, which are not High Z at POR (Power On Reset). See the *PSoC Mixed-Signal Array Technical Reference Manual* for details.

[+] Feedback

1.1.2 20-Pin Part Pinout

Table 1-2. 20-Pin Part Pinout (SSOP, SOIC)

Pin No.	Type		Pin Name	Description
	Digital	Analog		
1	IO	I	P0[7]	Analog column mux input.
2	IO	IO	P0[5]	Analog column mux input and column output.
3	IO	IO	P0[3]	Analog column mux input and column output.
4	IO	I	P0[1]	Analog column mux input.
5	Power		SMP	Switch Mode Pump (SMP) connection to external components required.
6	IO		P1[7]	I2C Serial Clock (SCL).
7	IO		P1[5]	I2C Serial Data (SDA).
8	IO		P1[3]	
9	IO		P1[1]	Crystal Input (XTALin), I2C Serial Clock (SCL), ISSP-SCLK*.
10	Power		Vss	Ground connection.
11	IO		P1[0]	Crystal Output (XTALout), I2C Serial Data (SDA), ISSP-SDATA*.
12	IO		P1[2]	
13	IO		P1[4]	Optional External Clock Input (EXTCLK).
14	IO		P1[6]	
15	Input		XRES	Active high external reset with internal pull down.
16	IO	I	P0[0]	Analog column mux input.
17	IO	IO	P0[2]	Analog column mux input and column output.
18	IO	IO	P0[4]	Analog column mux input and column output.
19	IO	I	P0[6]	Analog column mux input.
20	Power		Vdd	Supply voltage.

CY8C27243 20-Pin PSoC Device

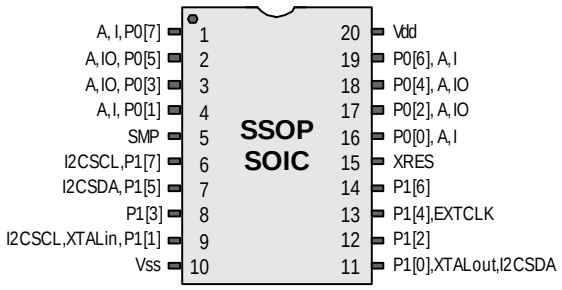

LEGEND: A = Analog, I = Input, and O = Output.
* These are the ISSP pins, which are not High Z at POR (Power On Reset). See the *PSoC Mixed-Signal Array Technical Reference Manual* for details.

[+] Feedback

1.1.3 28-Pin Part Pinout

Table 1-3. 28-Pin Part Pinout (PDIP, SSOP, SOIC)

Pin No.	Type		Pin Name	Description
	Digital	Analog		
1	IO	I	P0[7]	Analog column mux input.
2	IO	IO	P0[5]	Analog column mux input and column output.
3	IO	IO	P0[3]	Analog column mux input and column output.
4	IO	I	P0[1]	Analog column mux input.
5	IO		P2[7]	
6	IO		P2[5]	
7	IO	I	P2[3]	Direct switched capacitor block input.
8	IO	I	P2[1]	Direct switched capacitor block input.
9	Power		SMP	Switch Mode Pump (SMP) connection to external components required.
10	IO		P1[7]	I2C Serial Clock (SCL).
11	IO		P1[5]	I2C Serial Data (SDA).
12	IO		P1[3]	
13	IO		P1[1]	Crystal Input (XTALin), I2C Serial Clock (SCL), ISSP-SCLK*.
14	Power		Vss	Ground connection.
15	IO		P1[0]	Crystal Output (XTALout), I2C Serial Data (SDA), ISSP-SDATA*.
16	IO		P1[2]	
17	IO		P1[4]	Optional External Clock Input (EXTCLK).
18	IO		P1[6]	
19	Input		XRES	Active high external reset with internal pull down.
20	IO	I	P2[0]	Direct switched capacitor block input.
21	IO	I	P2[2]	Direct switched capacitor block input.
22	IO		P2[4]	External Analog Ground (AGND).
23	IO		P2[6]	External Voltage Reference (VRef).
24	IO	I	P0[0]	Analog column mux input.
25	IO	IO	P0[2]	Analog column mux input and column output.
26	IO	IO	P0[4]	Analog column mux input and column output.
27	IO	I	P0[6]	Analog column mux input.
28	Power		Vdd	Supply voltage.

LEGEND: A = Analog, I = Input, and O = Output.
* These are the ISSP pins, which are not High Z at POR (Power On Reset). See the *PSoC Mixed-Signal Array Technical Reference Manual* for details.

CY8C27443 28-Pin PSoC Device

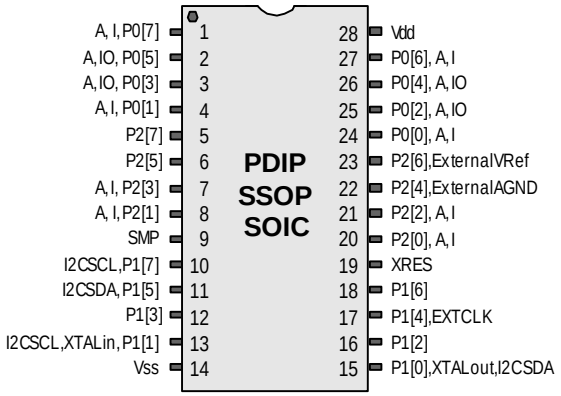

[+] Feedback

1.1.4 44-Pin Part Pinout

Table 1-4. 44-Pin Part Pinout (TQFP)

Pin No.	Type		Pin Name	Description
	Digital	Analog		
1	IO		P2[5]	
2	IO	I	P2[3]	Direct switched capacitor block input.
3	IO	I	P2[1]	Direct switched capacitor block input.
4	IO		P4[7]	
5	IO		P4[5]	
6	IO		P4[3]	
7	IO		P4[1]	
8	Power		SMP	Switch Mode Pump (SMP) connection to external components required.
9	IO		P3[7]	
10	IO		P3[5]	
11	IO		P3[3]	
12	IO		P3[1]	
13	IO		P1[7]	I2C Serial Clock (SCL).
14	IO		P1[5]	I2C Serial Data (SDA).
15	IO		P1[3]	
16	IO		P1[1]	Crystal Input (XTALin), I2C Serial Clock (SCL), ISSP-SCLK*.
17	Power		Vss	Ground connection.
18	IO		P1[0]	Crystal Output (XTALout), I2C Serial Data (SDA), ISSP-SDATA*.
19	IO		P1[2]	
20	IO		P1[4]	Optional External Clock Input (EXTCLK).
21	IO		P1[6]	
22	IO		P3[0]	
23	IO		P3[2]	
24	IO		P3[4]	
25	IO		P3[6]	
26	Input		XRES	Active high external reset with internal pull down.
27	IO		P4[0]	
28	IO		P4[2]	
29	IO		P4[4]	
30	IO		P4[6]	
31	IO	I	P2[0]	Direct switched capacitor block input.
32	IO	I	P2[2]	Direct switched capacitor block input.
33	IO		P2[4]	External Analog Ground (AGND).
34	IO		P2[6]	External Voltage Reference (VRef).
35	IO	I	P0[0]	Analog column mux input.
36	IO	IO	P0[2]	Analog column mux input and column output.
37	IO	IO	P0[4]	Analog column mux input and column output.
38	IO	I	P0[6]	Analog column mux input.
39	Power		Vdd	Supply voltage.
40	IO	I	P0[7]	Analog column mux input.
41	IO	IO	P0[5]	Analog column mux input and column output.
42	IO	IO	P0[3]	Analog column mux input and column output.
43	IO	I	P0[1]	Analog column mux input.
44	IO		P2[7]	

CY8C27543 44-Pin PSoC Device

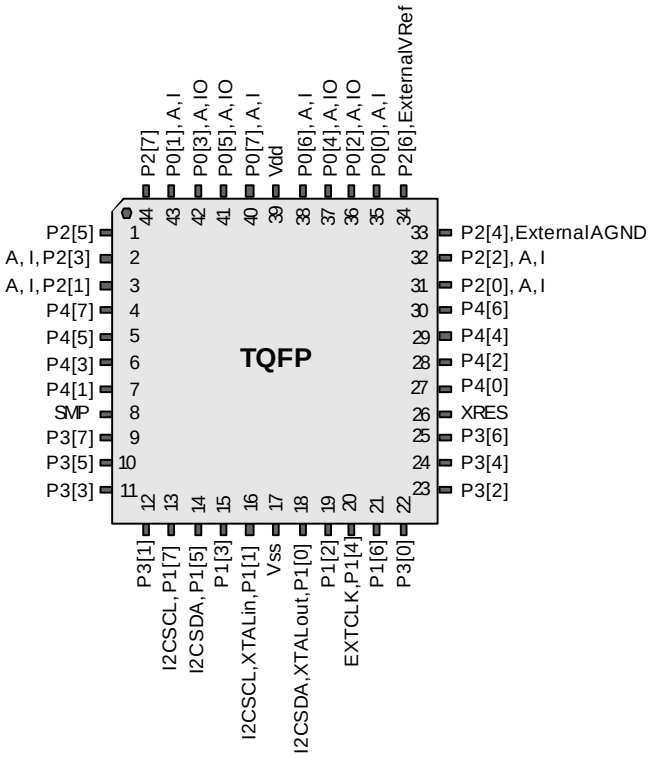

LEGEND: A = Analog, I = Input, and O = Output.
* These are the ISSP pins, which are not High Z at POR (Power On Reset). See the *PSoC Mixed-Signal Array Technical Reference Manual* for details.

[+] Feedback

1.1.5 48-Pin Part Pinouts

Table 1-5. 48-Pin Part Pinout (SSOP)

Pin No.	Type		Pin Name	Description
	Digital	Analog		
1	IO	I	P0[7]	Analog column mux input.
2	IO	IO	P0[5]	Analog column mux input and column output.
3	IO	IO	P0[3]	Analog column mux input and column output.
4	IO	I	P0[1]	Analog column mux input.
5	IO		P2[7]	
6	IO		P2[5]	
7	IO	I	P2[3]	Direct switched capacitor block input.
8	IO	I	P2[1]	Direct switched capacitor block input.
9	IO		P4[7]	
10	IO		P4[5]	
11	IO		P4[3]	
12	IO		P4[1]	
13	Power		SMP	Switch Mode Pump (SMP) connection to external components required.
14	IO		P3[7]	
15	IO		P3[5]	
16	IO		P3[3]	
17	IO		P3[1]	
18	IO		P5[3]	
19	IO		P5[1]	
20	IO		P1[7]	I2C Serial Clock (SCL).
21	IO		P1[5]	I2C Serial Data (SDA).
22	IO		P1[3]	
23	IO		P1[1]	Crystal Input (XTALin), I2C Serial Clock (SCL), ISSP-SCLK*.
24	Power		Vss	Ground connection.
25	IO		P1[0]	Crystal Output (XTALout), I2C Serial Data (SDA), ISSP-SDATA.*
26	IO		P1[2]	
27	IO		P1[4]	Optional External Clock Input (EXTCLK).
28	IO		P1[6]	
29	IO		P5[0]	
30	IO		P5[2]	
31	IO		P3[0]	
32	IO		P3[2]	
33	IO		P3[4]	
34	IO		P3[6]	
35	Input		XRES	Active high external reset with internal pull down.
36	IO		P4[0]	
37	IO		P4[2]	
38	IO		P4[4]	
39	IO		P4[6]	
40	IO	I	P2[0]	Direct switched capacitor block input.
41	IO	I	P2[2]	Direct switched capacitor block input.
42	IO		P2[4]	External Analog Ground (AGND).
43	IO		P2[6]	External Voltage Reference (VRef).
44	IO	I	P0[0]	Analog column mux input.
45	IO	IO	P0[2]	Analog column mux input and column output.
46	IO	IO	P0[4]	Analog column mux input and column output.
47	IO	I	P0[6]	Analog column mux input.
48	Power		Vdd	Supply voltage.

CY8C27643 48-Pin PSoC Device

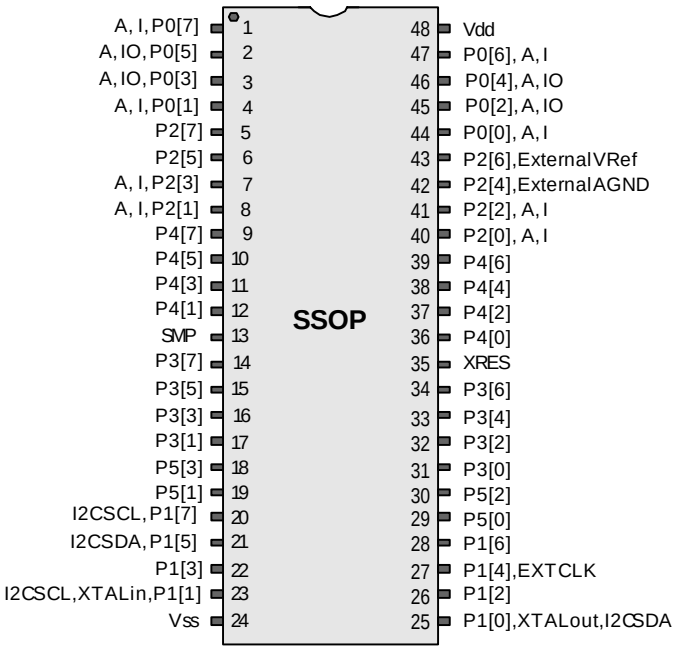

LEGEND: A = Analog, I = Input, and O = Output.
* These are the ISSP pins, which are not High Z at POR (Power On Reset). See the *PSoC Mixed-Signal Array Technical Reference Manual* for details.

[+] Feedback

Table 1-6. 48-Pin Part Pinout (QFN*)

Pin No.	Type		Pin Name	Description
	Digital	Analog		
1	IO	I	P2[3]	Direct switched capacitor block input.
2	IO	I	P2[1]	Direct switched capacitor block input.
3	IO		P4[7]	
4	IO		P4[5]	
5	IO		P4[3]	
6	IO		P4[1]	
7	Power		SMP	Switch Mode Pump (SMP) connection to external components required.
8	IO		P3[7]	
9	IO		P3[5]	
10	IO		P3[3]	
11	IO		P3[1]	
12	IO		P5[3]	
13	IO		P5[1]	
14	IO		P1[7]	I2C Serial Clock (SCL).
15	IO		P1[5]	I2C Serial Data (SDA).
16	IO		P1[3]	
17	IO		P1[1]	Crystal Input (XTALin), I2C Serial Clock (SCL), ISSP-SCLK*.
18	Power		Vss	Ground connection.
19	IO		P1[0]	Crystal Output (XTALout), I2C Serial Data (SDA), ISSP-SDATA*.
20	IO		P1[2]	
21	IO		P1[4]	Optional External Clock Input (EXTCLK).
22	IO		P1[6]	
23	IO		P5[0]	
24	IO		P5[2]	
25	IO		P3[0]	
26	IO		P3[2]	
27	IO		P3[4]	
28	IO		P3[6]	
29	Input		XRES	Active high external reset with internal pull down.
30	IO		P4[0]	
31	IO		P4[2]	
32	IO		P4[4]	
33	IO		P4[6]	
34	IO	I	P2[0]	Direct switched capacitor block input.
35	IO	I	P2[2]	Direct switched capacitor block input.
36	IO		P2[4]	External Analog Ground (AGND).
37	IO		P2[6]	External Voltage Reference (VRef).
38	IO	I	P0[0]	Analog column mux input.
39	IO	IO	P0[2]	Analog column mux input and column output.
40	IO	IO	P0[4]	Analog column mux input and column output.
41	IO	I	P0[6]	Analog column mux input.
42	Power		Vdd	Supply voltage.
43	IO	I	P0[7]	Analog column mux input.
44	IO	IO	P0[5]	Analog column mux input and column output.
45	IO	IO	P0[3]	Analog column mux input and column output.
46	IO	I	P0[1]	Analog column mux input.
47	IO		P2[7]	
48	IO		P2[5]	

CY8C27643 48-Pin PSoC Device

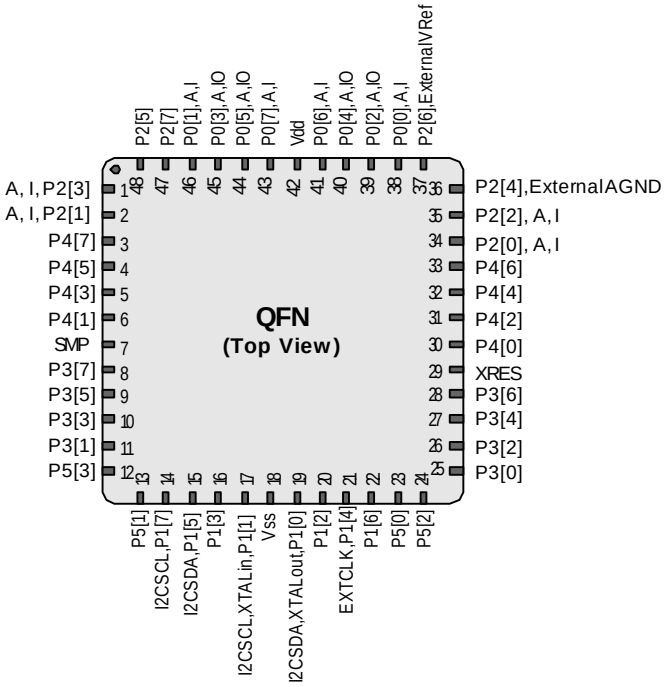

LEGEND: A = Analog, I = Input, and O = Output.

* The QFN package has a center pad that must be connected to ground (Vss).
* These are the ISSP pins, which are not High Z at POR (Power On Reset). See the *PSoC Mixed-Signal Array Technical Reference Manual* for details.

[+] Feedback

1.1.6 56-Pin Part Pinout

The 56-pin SSOP part is for the CY8C27002 On-Chip Debug (OCD) PSoC device.

Note This part is only used for in-circuit debugging. It is NOT available for production.

Table 1-7. 56-Pin Part Pinout (SSOP)

Pin No.	Type		Pin Name	Description
	Digital	Analog		
1			NC	No connection.
2	IO	I	P0[7]	Analog column mux input.
3	IO	I	P0[5]	Analog column mux input and column output.
4	IO	I	P0[3]	Analog column mux input and column output.
5	IO	I	P0[1]	Analog column mux input.
6	IO		P2[7]	
7	IO		P2[5]	
8	IO	I	P2[3]	Direct switched capacitor block input.
9	IO	I	P2[1]	Direct switched capacitor block input.
10	IO		P4[7]	
11	IO		P4[5]	
12	IO	I	P4[3]	
13	IO	I	P4[1]	
14	OCD		OCDE	OCD even data IO.
15	OCD		OCDO	OCD odd data output.
16	Power		SMP	Switch Mode Pump (SMP) connection to required external components.
17	IO		P3[7]	
18	IO		P3[5]	
19	IO		P3[3]	
20	IO		P3[1]	
21	IO		P5[3]	
22	IO		P5[1]	
23	IO		P1[7]	I2C Serial Clock (SCL).
24	IO		P1[5]	I2C Serial Data (SDA).
25			NC	No connection.
26	IO		P1[3]	
27	IO		P1[1]	Crystal Input (XTALin), I2C Serial Clock (SCL), ISSP-SCLK*.
28	Power		Vdd	Supply voltage.
29			NC	No connection.
30			NC	No connection..
31	IO		P1[0]	Crystal Output (XTALout), I2C Serial Data (SDA), ISSP-SDATA*.
32	IO		P1[2]	
33	IO		P1[4]	Optional External Clock Input (EXTCLK).
34	IO		P1[6]	
35	IO		P5[0]	
36	IO		P5[2]	
37	IO		P3[0]	
38	IO		P3[2]	
39	IO		P3[4]	
40	IO		P3[6]	
41	Input		XRES	Active high external reset with internal pull down.
42	OCD		HCLK	OCD high-speed clock output.
43	OCD		CCLK	OCD CPU clock output.
44	IO		P4[0]	
45	IO		P4[2]	
46	IO		P4[4]	
47	IO		P4[6]	

CY8C27002 56-Pin PSoC Device

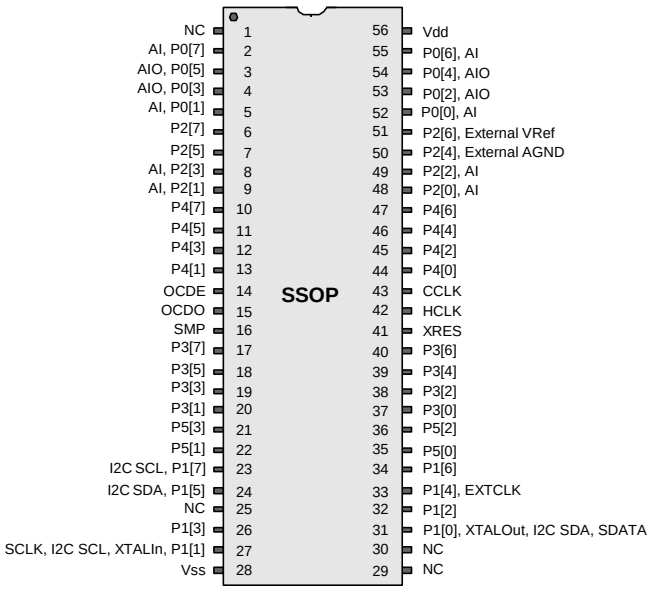

Not for Production

[+] Feedback

Table 1-7. 56-Pin Part Pinout (SSOP)

48	IO	I	P2[0]	Direct switched capacitor block input.
49	IO	I	P2[2]	Direct switched capacitor block input.
50	IO		P2[4]	External Analog Ground (AGND).
51	IO		P2[6]	External Voltage Reference (VRef).
52	IO	I	P0[0]	Analog column mux input.
53	IO	I	P0[2]	Analog column mux input and column output.
54	IO	I	P0[4]	Analog column mux input and column output.
55	IO	I	P0[6]	Analog column mux input.
56	Power		Vdd	Supply voltage.

LEGEND: A = Analog, I = Input, O = Output, and OCD = On-Chip Debug.

* These are the ISSP pins, which are not High Z at POR (Power On Reset). See the *PSoC Mixed-Signal Array Technical Reference Manual* for details.

[+] Feedback

2. Register Reference

This chapter lists the registers of the CY8C27x43 PSoC device. For detailed register information, reference the *PSoC Mixed-Signal Array Technical Reference Manual*.

2.1 Register Conventions

The register conventions specific to this section are listed in the following table.

Convention	Description
R	Read register or bit(s)
W	Write register or bit(s)
L	Logical register or bit(s)
C	Clearable register or bit(s)
#	Access is bit specific

2.2 Register Mapping Tables

The PSoC device has a total register address space of 512 bytes. The register space is referred to as IO space and is divided into two banks. The XOI bit in the Flag register (CPU_F) determines which bank the user is currently in. When the XOI bit is set the user is in Bank 1.

Note In the following register mapping tables, blank fields are reserved and should not be accessed.

[+] Feedback

Register Map Bank 0 Table: User Space

Name	Addr (0,Hex)	Access	Name	Addr (0,Hex)	Access	Name	Addr (0,Hex)	Access	Name	Addr (0,Hex)	Access
PRT0DR	00	RW		40		ASC10CR0	80	RW		C0	
PRT0IE	01	RW		41		ASC10CR1	81	RW		C1	
PRT0GS	02	RW		42		ASC10CR2	82	RW		C2	
PRT0DM2	03	RW		43		ASC10CR3	83	RW		C3	
PRT1DR	04	RW		44		ASD11CR0	84	RW		C4	
PRT1IE	05	RW		45		ASD11CR1	85	RW		C5	
PRT1GS	06	RW		46		ASD11CR2	86	RW		C6	
PRT1DM2	07	RW		47		ASD11CR3	87	RW		C7	
PRT2DR	08	RW		48		ASC12CR0	88	RW		C8	
PRT2IE	09	RW		49		ASC12CR1	89	RW		C9	
PRT2GS	0A	RW		4A		ASC12CR2	8A	RW		CA	
PRT2DM2	0B	RW		4B		ASC12CR3	8B	RW		CB	
PRT3DR	0C	RW		4C		ASD13CR0	8C	RW		CC	
PRT3IE	0D	RW		4D		ASD13CR1	8D	RW		CD	
PRT3GS	0E	RW		4E		ASD13CR2	8E	RW		CE	
PRT3DM2	0F	RW		4F		ASD13CR3	8F	RW		CF	
PRT4DR	10	RW		50		ASD20CR0	90	RW		D0	
PRT4IE	11	RW		51		ASD20CR1	91	RW		D1	
PRT4GS	12	RW		52		ASD20CR2	92	RW		D2	
PRT4DM2	13	RW		53		ASD20CR3	93	RW		D3	
PRT5DR	14	RW		54		ASC21CR0	94	RW		D4	
PRT5IE	15	RW		55		ASC21CR1	95	RW		D5	
PRT5GS	16	RW		56		ASC21CR2	96	RW	I2C_CFG	D6	RW
PRT5DM2	17	RW		57		ASC21CR3	97	RW	I2C_SCR	D7	#
	18			58		ASD22CR0	98	RW	I2C_DR	D8	RW
	19			59		ASD22CR1	99	RW	I2C_MSCR	D9	#
	1A			5A		ASD22CR2	9A	RW	INT_CLR0	DA	RW
	1B			5B		ASD22CR3	9B	RW	INT_CLR1	DB	RW
	1C			5C		ASC23CR0	9C	RW		DC	
	1D			5D		ASC23CR1	9D	RW	INT_CLR3	DD	RW
	1E			5E		ASC23CR2	9E	RW	INT_MSK3	DE	RW
	1F			5F		ASC23CR3	9F	RW		DF	
DBB00DR0	20	#	AMX_IN	60	RW		A0		INT_MSK0	E0	RW
DBB00DR1	21	W		61			A1		INT_MSK1	E1	RW
DBB00DR2	22	RW		62			A2		INT_VC	E2	RC
DBB00CR0	23	#	ARF_CR	63	RW		A3		RES_WDT	E3	W
DBB01DR0	24	#	CMP_CR0	64	#		A4		DEC_DH	E4	RC
DBB01DR1	25	W	ASY_CR	65	#		A5		DEC_DL	E5	RC
DBB01DR2	26	RW	CMP_CR1	66	RW		A6		DEC_CR0	E6	RW
DBB01CR0	27	#		67			A7		DEC_CR1	E7	RW
DCB02DR0	28	#		68			A8		MUL_X	E8	W
DCB02DR1	29	W		69			A9		MUL_Y	E9	W
DCB02DR2	2A	RW		6A			AA		MUL_DH	EA	R
DCB02CR0	2B	#		6B			AB		MUL_DL	EB	R
DCB03DR0	2C	#		6C			AC		ACC_DR1	EC	RW
DCB03DR1	2D	W		6D			AD		ACC_DR0	ED	RW
DCB03DR2	2E	RW		6E			AE		ACC_DR3	EE	RW
DCB03CR0	2F	#		6F			AF		ACC_DR2	EF	RW
DBB10DR0	30	#	ACB00CR3	70	RW	RDI0RI	B0	RW		F0	
DBB10DR1	31	W	ACB00CR0	71	RW	RDI0SYN	B1	RW		F1	
DBB10DR2	32	RW	ACB00CR1	72	RW	RDI0IS	B2	RW		F2	
DBB10CR0	33	#	ACB00CR2	73	RW	RDI0LT0	B3	RW		F3	
DBB11DR0	34	#	ACB01CR3	74	RW	RDI0LT1	B4	RW		F4	
DBB11DR1	35	W	ACB01CR0	75	RW	RDI0RO0	B5	RW		F5	
DBB11DR2	36	RW	ACB01CR1	76	RW	RDI0RO1	B6	RW		F6	
DBB11CR0	37	#	ACB01CR2	77	RW		B7		CPU_F	F7	RL
DCB12DR0	38	#	ACB02CR3	78	RW	RDI1RI	B8	RW		F8	
DCB12DR1	39	W	ACB02CR0	79	RW	RDI1SYN	B9	RW		F9	
DCB12DR2	3A	RW	ACB02CR1	7A	RW	RDI1IS	BA	RW		FA	
DCB12CR0	3B	#	ACB02CR2	7B	RW	RDI1LT0	BB	RW		FB	
DCB13DR0	3C	#	ACB03CR3	7C	RW	RDI1LT1	BC	RW		FC	
DCB13DR1	3D	W	ACB03CR0	7D	RW	RDI1RO0	BD	RW		FD	
DCB13DR2	3E	RW	ACB03CR1	7E	RW	RDI1RO1	BE	RW	CPU_SCR1	FE	#
DCB13CR0	3F	#	ACB03CR2	7F	RW		BF		CPU_SCR0	FF	#

Blank fields are Reserved and should not be accessed. # Access is bit specific.

[+] Feedback

Register Map Bank 1 Table: Configuration Space

Name	Addr (1,Hex)	Access	Name	Addr (1,Hex)	Access	Name	Addr (1,Hex)	Access	Name	Addr (1,Hex)	Access
PRT0DM0	00	RW		40		ASC10CR0	80	RW		C0	
PRT0DM1	01	RW		41		ASC10CR1	81	RW		C1	
PRT0IC0	02	RW		42		ASC10CR2	82	RW		C2	
PRT0IC1	03	RW		43		ASC10CR3	83	RW		C3	
PRT1DM0	04	RW		44		ASD11CR0	84	RW		C4	
PRT1DM1	05	RW		45		ASD11CR1	85	RW		C5	
PRT1IC0	06	RW		46		ASD11CR2	86	RW		C6	
PRT1IC1	07	RW		47		ASD11CR3	87	RW		C7	
PRT2DM0	08	RW		48		ASC12CR0	88	RW		C8	
PRT2DM1	09	RW		49		ASC12CR1	89	RW		C9	
PRT2IC0	0A	RW		4A		ASC12CR2	8A	RW		CA	
PRT2IC1	0B	RW		4B		ASC12CR3	8B	RW		CB	
PRT3DM0	0C	RW		4C		ASD13CR0	8C	RW		CC	
PRT3DM1	0D	RW		4D		ASD13CR1	8D	RW		CD	
PRT3IC0	0E	RW		4E		ASD13CR2	8E	RW		CE	
PRT3IC1	0F	RW		4F		ASD13CR3	8F	RW		CF	
PRT4DM0	10	RW		50		ASD20CR0	90	RW	GDI_O_IN	D0	RW
PRT4DM1	11	RW		51		ASD20CR1	91	RW	GDI_E_IN	D1	RW
PRT4IC0	12	RW		52		ASD20CR2	92	RW	GDI_O_OU	D2	RW
PRT4IC1	13	RW		53		ASD20CR3	93	RW	GDI_E_OU	D3	RW
PRT5DM0	14	RW		54		ASC21CR0	94	RW		D4	
PRT5DM1	15	RW		55		ASC21CR1	95	RW		D5	
PRT5IC0	16	RW		56		ASC21CR2	96	RW		D6	
PRT5IC1	17	RW		57		ASC21CR3	97	RW		D7	
	18			58		ASD22CR0	98	RW		D8	
	19			59		ASD22CR1	99	RW		D9	
	1A			5A		ASD22CR2	9A	RW		DA	
	1B			5B		ASD22CR3	9B	RW		DB	
	1C			5C		ASC23CR0	9C	RW		DC	
	1D			5D		ASC23CR1	9D	RW	OSC_GO_EN	DD	RW
	1E			5E		ASC23CR2	9E	RW	OSC_CR4	DE	RW
	1F			5F		ASC23CR3	9F	RW	OSC_CR3	DF	RW
DBB00FN	20	RW	CLK_CR0	60	RW		A0		OSC_CR0	E0	RW
DBB00IN	21	RW	CLK_CR1	61	RW		A1		OSC_CR1	E1	RW
DBB00OU	22	RW	ABF_CR0	62	RW		A2		OSC_CR2	E2	RW
	23		AMD_CR0	63	RW		A3		VLT_CR	E3	RW
DBB01FN	24	RW		64			A4		VLT_CMP	E4	R
DBB01IN	25	RW		65			A5			E5	
DBB01OU	26	RW	AMD_CR1	66	RW		A6			E6	
	27		ALT_CR0	67	RW		A7			E7	
DCB02FN	28	RW	ALT_CR1	68	RW		A8		IMO_TR	E8	W
DCB02IN	29	RW	CLK_CR2	69	RW		A9		ILO_TR	E9	W
DCB02OU	2A	RW		6A			AA		BDG_TR	EA	RW
	2B			6B			AB		ECO_TR	EB	W
DCB03FN	2C	RW		6C			AC			EC	
DCB03IN	2D	RW		6D			AD			ED	
DCB03OU	2E	RW		6E			AE			EE	
	2F			6F			AF			EF	
DBB10FN	30	RW	ACB00CR3	70	RW	RDI0RI	B0	RW		F0	
DBB10IN	31	RW	ACB00CR0	71	RW	RDI0SYN	B1	RW		F1	
DBB10OU	32	RW	ACB00CR1	72	RW	RDI0IS	B2	RW		F2	
	33		ACB00CR2	73	RW	RDI0LT0	B3	RW		F3	
DBB11FN	34	RW	ACB01CR3	74	RW	RDI0LT1	B4	RW		F4	
DBB11IN	35	RW	ACB01CR0	75	RW	RDI0RO0	B5	RW		F5	
DBB11OU	36	RW	ACB01CR1	76	RW	RDI0RO1	B6	RW		F6	
	37		ACB01CR2	77	RW		B7		CPU_F	F7	RL
DCB12FN	38	RW	ACB02CR3	78	RW	RDI1RI	B8	RW		F8	
DCB12IN	39	RW	ACB02CR0	79	RW	RDI1SYN	B9	RW		F9	
DCB12OU	3A	RW	ACB02CR1	7A	RW	RDI1IS	BA	RW		FA	
	3B		ACB02CR2	7B	RW	RDI1LT0	BB	RW		FB	
DCB13FN	3C	RW	ACB03CR3	7C	RW	RDI1LT1	BC	RW		FC	
DCB13IN	3D	RW	ACB03CR0	7D	RW	RDI1RO0	BD	RW		FD	
DCB13OU	3E	RW	ACB03CR1	7E	RW	RDI1RO1	BE	RW	CPU_SCR1	FE	#
	3F		ACB03CR2	7F	RW		BF		CPU_SCR0	FF	#

Blank fields are Reserved and should not be accessed. # Access is bit specific.

[+] Feedback

3. Electrical Specifications

This chapter presents the DC and AC electrical specifications of the CY8C27x43 PSoC device. For the most up to date electrical specifications, confirm that you have the most recent data sheet by going to the web at http://www.cypress.com/psoc.

Specifications are valid for -40°C ≤ T_A ≤ 85°C and T_J ≤ 100°C, except where noted. Specifications for devices running at greater than 12 MHz are valid for -40°C ≤ T_A ≤ 70°C and T_J ≤ 82°C.

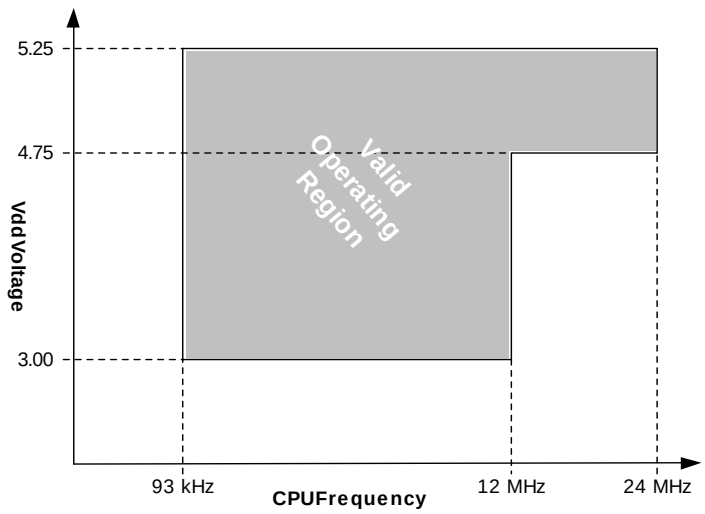

Figure 3-1. Voltage versus CPU Frequency

The following table lists the units of measure that are used in this chapter.

Table 3-1: Units of Measure

Symbol	Unit of Measure	Symbol	Unit of Measure
°C	degree Celsius	µW	microwatts
dB	decibels	mA	milli-ampere
fF	femto farad	ms	milli-second
Hz	hertz	mV	milli-volts
KB	1024 bytes	nA	nanoampere
Kbit	1024 bits	ns	nanosecond
kHz	kilohertz	nV	nanovolts
kΩ	kilohm	Ω	ohm
MHz	megahertz	pA	picoampere
MΩ	megaohm	pF	picofarad
µA	microampere	pp	peak-to-peak
µF	microfarad	ppm	parts per million
µH	microhenry	ps	picosecond
µs	microsecond	sps	samples per second
µV	microvolts	σ	sigma: one standard deviation
µVrms	microvolts root-mean-square	V	volts

[+] Feedback

3.1 Absolute Maximum Ratings

Table 3-2. Absolute Maximum Ratings

Symbol	Description	Min	Typ	Max	Units	Notes
T_{STG}	Storage Temperature	-55	25	+100	^oC	Higher storage temperatures will reduce data retention time. Recommended storage temperature is +25^oC ± 25^oC. Extended duration storage temperatures above 65^oC will degrade reliability.
T_A	Ambient Temperature with Power Applied	-40	–	+85	^oC	
Vdd	Supply Voltage on Vdd Relative to Vss	-0.5	–	+6.0	V	
V_{IO}	DC Input Voltage	Vss- 0.5	–	Vdd + 0.5	V	
V_{IOZ}	DC Voltage Applied to Tri-state	Vss - 0.5	–	Vdd + 0.5	V	
I_{MIO}	Maximum Current into any Port Pin	-25	–	+50	mA	
I_{MAIO}	Maximum Current into any Port Pin Configured as Analog Driver	-50	–	+50	mA	
ESD	Electro Static Discharge Voltage	2000	–	–	V	Human Body Model ESD.
LU	Latch-up Current	–	–	200	mA	

3.2 Operating Temperature

Table 3-3. Operating Temperature

Symbol	Description	Min	Typ	Max	Units	Notes
T_A	Ambient Temperature	-40	–	+85	^oC	
T_J	Junction Temperature	-40	–	+100	^oC	The temperature rise from ambient to junction is package specific. See "Thermal Impedances" on page 44. The user must limit the power consumption to comply with this requirement.

[+] Feedback

3.3 DC Electrical Characteristics

3.3.1 DC Chip-Level Specifications

The following table lists guaranteed maximum and minimum specifications for the voltage and temperature ranges: 4.75V to 5.25V and -40°C ≤ T_A ≤ 85°C, or 3.0V to 3.6V and -40°C ≤ T_A ≤ 85°C, respectively. Typical parameters apply to 5V and 3.3V at 25°C and are for design guidance only.

Table 3-4. DC Chip-Level Specifications

Symbol	Description	Min	Typ	Max	Units	Notes
Vdd	Supply Voltage	3.00	–	5.25	V	
I_{DD}	Supply Current	–	5	8	mA	Conditions are Vdd = 5.0V, T_A = 25 °C, CPU = 3 MHz, SYSCLK doubler disabled. VC1 = 1.5 MHz, VC2 = 93.75 kHz, VC3 = 93.75 kHz.
I_{DD3}	Supply Current	–	3.3	6.0	mA	Conditions are Vdd = 3.3V, T_A = 25 °C, CPU = 3 MHz, SYSCLK doubler disabled. VC1 = 1.5 MHz, VC2 = 93.75 kHz, VC3 = 93.75 kHz.
I_{SB}	Sleep (Mode) Current with POR, LVD, Sleep Timer, and WDT.[a]	–	3	6.5	µA	Conditions are with internal slow speed oscillator, Vdd = 3.3V, -40 °C ≤ T_A ≤ 55 °C.
I_{SBH}	Sleep (Mode) Current with POR, LVD, Sleep Timer, and WDT at high temperature.[a]	–	4	25	µA	Conditions are with internal slow speed oscillator, Vdd = 3.3V, 55 °C < T_A ≤ 85 °C.
I_{SBXTL}	Sleep (Mode) Current with POR, LVD, Sleep Timer, WDT, and external crystal.[a]	–	4	7.5	µA	Conditions are with properly loaded, 1 µW max, 32.768 kHz crystal. Vdd = 3.3V, -40 °C ≤ T_A ≤ 55 °C.
I_{SBXTLH}	Sleep (Mode) Current with POR, LVD, Sleep Timer, WDT, and external crystal at high temperature.[a]	–	5	26	µA	Conditions are with properly loaded, 1 µW max, 32.768 kHz crystal. Vdd = 3.3V, 55 °C < T_A ≤ 85 °C.
V_{REF}	Reference Voltage (Bandgap) for Silicon A [b]	1.275	1.300	1.325	V	Trimmed for appropriate Vdd.
V_{REF}	Reference Voltage (Bandgap) for Silicon B [b]	1.280	1.300	1.320	V	Trimmed for appropriate Vdd.

a. Standby current includes all functions (POR, LVD, WDT, Sleep Time) needed for reliable system operation. This should be compared with devices that have similar functions enabled.

b. Refer to the Ordering Information chapter on page 48.

3.3.2 DC General Purpose IO Specifications

The following table lists guaranteed maximum and minimum specifications for the voltage and temperature ranges: 4.75V to 5.25V and -40°C ≤ T_A ≤ 85°C, or 3.0V to 3.6V and -40°C ≤ T_A ≤ 85°C, respectively. Typical parameters apply to 5V and 3.3V at 25°C and are for design guidance only.

Table 3-5. DC GPIO Specifications

Symbol	Description	Min	Typ	Max	Units	Notes
R_{PU}	Pull up Resistor	4	5.6	8	kΩ	
R_{PD}	Pull down Resistor	4	5.6	8	kΩ	
V_{OH}	High Output Level	Vdd - 1.0	–	–	V	IOH = 10 mA, Vdd = 4.75 to 5.25V (8 total loads, 4 on even port pins (for example, P0[2], P1[4]), 4 on odd port pins (for example, P0[3], P1[5])).
V_{OL}	Low Output Level	–	–	0.75	V	IOL = 25 mA, Vdd = 4.75 to 5.25V (8 total loads, 4 on even port pins (for example, P0[2], P1[4]), 4 on odd port pins (for example, P0[3], P1[5])).
V_{IL}	Input Low Level	–	–	0.8	V	Vdd = 3.0 to 5.25.
V_{IH}	Input High Level	2.1	–		V	Vdd = 3.0 to 5.25.
V_H	Input Hysterisis	–	60	–	mV	
I_{IL}	Input Leakage (Absolute Value)	–	1	–	nA	Gross tested to 1 µA.
C_{IN}	Capacitive Load on Pins as Input	–	3.5	10	pF	Package and pin dependent. Temp = 25°C.
C_{OUT}	Capacitive Load on Pins as Output	–	3.5	10	pF	Package and pin dependent. Temp = 25°C.

[+] Feedback

3.3.3 DC Operational Amplifier Specifications

The following tables list guaranteed maximum and minimum specifications for the voltage and temperature ranges: 4.75V to 5.25V and -40°C ≤ T_A ≤ 85°C, or 3.0V to 3.6V and -40°C ≤ T_A ≤ 85°C, respectively. Typical parameters apply to 5V and 3.3V at 25°C and are for design guidance only.

The Operational Amplifier is a component of both the Analog Continuous Time PSoC blocks and the Analog Switched Cap PSoC blocks. The guaranteed specifications are measured in the Analog Continuous Time PSoC block. Typical parameters apply to 5V at 25°C and are for design guidance only.

Table 3-6. 5V DC Operational Amplifier Specifications

Symbol	Description	Min	Typ	Max	Units	Notes
V_{OSOA}	Input Offset Voltage (absolute value)					
	Power = Low, Opamp Bias = High	–	1.6	10	mV	
	Power = Medium, Opamp Bias = High	–	1.3	8	mV	
	Power = High, Opamp Bias = High	–	1.2	7.5	mV	
TCV_{OSOA}	Average Input Offset Voltage Drift	–	7.0	35.0	µV/°C	
I_{EBOA}	Input Leakage Current (Port 0 Analog Pins)	–	20	–	pA	Gross tested to 1 µA.
C_{INOA}	Input Capacitance (Port 0 Analog Pins)	–	4.5	9.5	pF	Package and pin dependent. Temp = 25°C.
V_{CMOA}	Common Mode Voltage Range	0.0	–	Vdd	V	The common-mode input voltage range is measured through an analog output buffer. The specification includes the limitations imposed by the characteristics of the analog output buffer.
	Common Mode Voltage Range (high power or high opamp bias)	0.5	–	Vdd - 0.5		
$CMRR_{OA}$	Common Mode Rejection Ratio		–	–	dB	Specification is applicable at high power. For all other bias modes (except high power, high opamp bias), minimum is 60 dB.
	Power = Low	60				
	Power = Medium	60				
	Power = High	60				
G_{OLOA}	Open Loop Gain		–	–	dB	Specification is applicable at high power. For all other bias modes (except high power, high opamp bias), minimum is 60 dB.
	Power = Low	60				
	Power = Medium	60				
	Power = High	80				
$V_{OHIGHOA}$	High Output Voltage Swing (internal signals)					
	Power = Low	Vdd - 0.2	–	–	V	
	Power = Medium	Vdd - 0.2	–	–	V	
	Power = High	Vdd - 0.5	–	–	V	
V_{OLOWOA}	Low Output Voltage Swing (internal signals)					
	Power = Low	–	–	0.2	V	
	Power = Medium	–	–	0.2	V	
	Power = High	–	–	0.5	V	
I_{SOA}	Supply Current (including associated AGND buffer)					
	Power = Low, Opamp Bias = Low	–	150	200	µA	
	Power = Low, Opamp Bias = High	–	300	400	µA	
	Power = Medium, Opamp Bias = Low	–	600	800	µA	
	Power = Medium, Opamp Bias = High	–	1200	1600	µA	
	Power = High, Opamp Bias = Low	–	2400	3200	µA	
	Power = High, Opamp Bias = High	–	4600	6400	µA	
$PSRR_{OA}$	Supply Voltage Rejection Ratio	60	–	–	dB	Vss ≤ VIN ≤ (Vdd - 2.25) or (Vdd - 1.25V) ≤ VIN ≤ Vdd.

[+] Feedback

Table 3-7. 3.3V DC Operational Amplifier Specifications

Symbol	Description	Min	Typ	Max	Units	Notes
V_{OSOA}	Input Offset Voltage (absolute value)					
	Power = Low, Opamp Bias = High	–	1.65	10	mV	
	Power = Medium, Opamp Bias = High	–	1.32	8	mV	
	High Power is 5 Volts Only					
TCV_{OSOA}	Average Input Offset Voltage Drift	–	7.0	35.0	µV/°C	
I_{EBOA}	Input Leakage Current (Port 0 Analog Pins)	–	20	–	pA	Gross tested to 1 µA.
C_{INOA}	Input Capacitance (Port 0 Analog Pins)	–	4.5	9.5	pF	Package and pin dependent. Temp = 25°C.
V_{CMOA}	Common Mode Voltage Range	0.2	–	Vdd - 0.2	V	The common-mode input voltage range is measured through an analog output buffer. The specification includes the limitations imposed by the characteristics of the analog output buffer.
$CMRR_{OA}$	Common Mode Rejection Ratio		–	–	dB	Specification is applicable at high power. For all other bias modes (except high power, high opamp bias), minimum is 60 dB.
	Power = Low	50				
	Power = Medium	50				
	Power = High	50				
G_{OLOA}	Open Loop Gain		–	–	dB	Specification is applicable at high power. For all other bias modes (except high power, high opamp bias), minimum is 60 dB.
	Power = Low	60				
	Power = Medium	60				
	Power = High	80				
$V_{OHIGHOA}$	High Output Voltage Swing (internal signals)					
	Power = Low	Vdd - 0.2	–	–	V	
	Power = Medium	Vdd - 0.2	–	–	V	
	Power = High is 5V only	Vdd - 0.2	–	–	V	
V_{OLOWOA}	Low Output Voltage Swing (internal signals)					
	Power = Low	–	–	0.2	V	
	Power = Medium	–	–	0.2	V	
	Power = High	–	–	0.2	V	
I_{SOA}	Supply Current (including associated AGND buffer)					
	Power = Low, Opamp Bias = Low	–	150	200	µA	
	Power = Low, Opamp Bias = High	–	300	400	µA	
	Power = Medium, Opamp Bias = Low	–	600	800	µA	
	Power = Medium, Opamp Bias = High	–	1200	1600	µA	
	Power = High, Opamp Bias = Low	–	2400	3200	µA	
	Power = High, Opamp Bias = High	–	4600	6400	µA	
$PSRR_{OA}$	Supply Voltage Rejection Ratio	50	80	–	dB	Vss ≤ VIN ≤ (Vdd - 2.25) or (Vdd - 1.25V) ≤ VIN ≤ Vdd.

3.3.4 DC Low Power Comparator Specifications

The following table lists guaranteed maximum and minimum specifications for the voltage and temperature ranges: 4.75V to 5.25V and -40°C ≤ T_A ≤ 85°C, 3.0V to 3.6V and -40°C ≤ T_A ≤ 85°C, or 2.4V to 3.0V and -40°C ≤ T_A ≤ 85°C, respectively. Typical parameters apply to 5V at 25°C and are for design guidance only.

Table 3-8. DC Low Power Comparator Specifications

Symbol	Description	Min	Typ	Max	Units	Notes
V_{REFLPC}	Low power comparator (LPC) reference voltage range	0.2	–	Vdd - 1	V	
I_{SLPC}	LPC supply current	–	10	40	µA	
V_{OSLPC}	LPC voltage offset	–	2.5	30	mV	

[+] Feedback

3.3.5 DC Analog Output Buffer Specifications

The following tables list guaranteed maximum and minimum specifications for the voltage and temperature ranges: 4.75V to 5.25V and -40°C ≤ T_A ≤ 85°C, or 3.0V to 3.6V and -40°C ≤ T_A ≤ 85°C, respectively. Typical parameters apply to 5V and 3.3V at 25°C and are for design guidance only.

Table 3-9. 5V DC Analog Output Buffer Specifications

Symbol	Description	Min	Typ	Max	Units	Notes
V_{OSOB}	Input Offset Voltage (Absolute Value)	–	3	12	mV	
TCV_{OSOB}	Average Input Offset Voltage Drift	–	+6	–	µV/°C	
V_{CMOB}	Common-Mode Input Voltage Range	0.5	–	Vdd - 1.0	V	
R_{OUTOB}	Output Resistance Power = Low Power = High	 – –	 1 1	 – –	 Ω Ω	
$V_{OHIGHOB}$	High Output Voltage Swing (Load = 32 ohms to Vdd/2) Power = Low Power = High	 0.5 x Vdd + 1.3 0.5 x Vdd + 1.3	 – –	 – –	 V V	
V_{OLOWOB}	Low Output Voltage Swing (Load = 32 ohms to Vdd/2) Power = Low Power = High	 – –	 – –	 0.5 x Vdd - 1.3 0.5 x Vdd - 1.3	 V V	
I_{SOB}	Supply Current Including Bias Cell (No Load) Power = Low Power = High	 – –	 1.1 2.6	 5.1 8.8	 mA mA	
$PSRR_{OB}$	Supply Voltage Rejection Ratio	60	64	–	dB	

Table 3-10. 3.3V DC Analog Output Buffer Specifications

Symbol	Description	Min	Typ	Max	Units	Notes
V_{OSOB}	Input Offset Voltage (Absolute Value)	–	3	12	mV	
TCV_{OSOB}	Average Input Offset Voltage Drift	–	+6	–	µV/°C	
V_{CMOB}	Common-Mode Input Voltage Range	0.5	-	Vdd - 1.0	V	
R_{OUTOB}	Output Resistance Power = Low Power = High	 – –	 1 1	 – –	 Ω Ω	
$V_{OHIGHOB}$	High Output Voltage Swing (Load = 1k ohms to Vdd/2) Power = Low Power = High	 0.5 x Vdd + 1.0 0.5 x Vdd + 1.0	 – –	 – –	 V V	
V_{OLOWOB}	Low Output Voltage Swing (Load = 1k ohms to Vdd/2) Power = Low Power = High	 – –	 – –	 0.5 x Vdd - 1.0 0.5 x Vdd - 1.0	 V V	
I_{SOB}	Supply Current Including Bias Cell (No Load) Power = Low Power = High	 –	 0.8 2.0	 2.0 4.3	 mA mA	
$PSRR_{OB}$	Supply Voltage Rejection Ratio	60	64	–	dB	

[+] Feedback

3.3.6 DC Switch Mode Pump Specifications

The following table lists guaranteed maximum and minimum specifications for the voltage and temperature ranges: 4.75V to 5.25V and -40°C ≤ T_A ≤ 85°C, or 3.0V to 3.6V and -40°C ≤ T_A ≤ 85°C, respectively. Typical parameters apply to 5V and 3.3V at 25°C and are for design guidance only.

Table 3-11. DC Switch Mode Pump (SMP) Specifications

Symbol	Description	Min	Typ	Max	Units	Notes
V_{PUMP} 5V	5V Output Voltage	4.75	5.0	5.25	V	Configuration of footnote.[a] Average, neglecting ripple. SMP trip voltage is set to 5.0V.
V_{PUMP} 3V	3V Output Voltage	3.00	3.25	3.60	V	Configuration of footnote.[a] Average, neglecting ripple. SMP trip voltage is set to 3.25V.
I_{PUMP}	Available Output Current V_{BAT} = 1.5V, V_{PUMP} = 3.25V V_{BAT} = 1.8V, V_{PUMP} = 5.0V	 8 5	 – –	 – –	 mA mA	Configuration of footnote.[a] SMP trip voltage is set to 3.25V. SMP trip voltage is set to 5.0V.
V_{BAT}5V	Input Voltage Range from Battery	1.8	–	5.0	V	Configuration of footnote.[a] SMP trip voltage is set to 5.0V.
V_{BAT}3V	Input Voltage Range from Battery	1.0	–	3.3	V	Configuration of footnote.[a] SMP trip voltage is set to 3.25V.
$V_{BATSTART}$	Minimum Input Voltage from Battery to Start Pump	1.1	–	–	V	Configuration of footnote.[a]
ΔV_{PUMP_Line}	Line Regulation (over V_{BAT} range)	–	5	–	$\%V_O$	Configuration of footnote.[a] V_O is the "Vdd Value for PUMP Trip" specified by the VM[2:0] setting in the DC POR and LVD Specification, Table 3-17 on page 28.
ΔV_{PUMP_Load}	Load Regulation	–	5	–	$\%V_O$	Configuration of footnote.[a] V_O is the "Vdd Value for PUMP Trip" specified by the VM[2:0] setting in the DC POR and LVD Specification, Table 3-17 on page 28.
ΔV_{PUMP_Ripple}	Output Voltage Ripple (depends on capacitor/load)	–	100	–	mVpp	Configuration of footnote.[a] Load is 5mA.
E_3	Efficiency	35	50	–	%	Configuration of footnote.[a] Load is 5 mA. SMP trip voltage is set to 3.25V.
F_{PUMP}	Switching Frequency	–	1.3	–	MHz	
DC_{PUMP}	Switching Duty Cycle	–	50	–	%	

a. L_1 = 2 µH inductor, C_1 = 10 µF capacitor, D_1 = Schottky diode. See Figure 3-2.

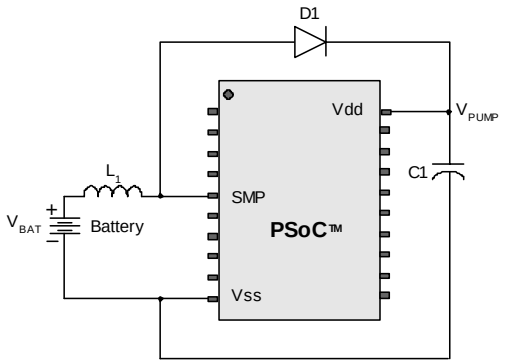

Figure 3-2. Basic Switch Mode Pump Circuit

[+] Feedback

3.3.7 DC Analog Reference Specifications

The following tables list guaranteed maximum and minimum specifications for the voltage and temperature ranges: 4.75V to 5.25V and -40°C ≤ T_A ≤ 85°C, or 3.0V to 3.6V and -40°C ≤ T_A ≤ 85°C, respectively. Typical parameters apply to 5V and 3.3V at 25°C and are for design guidance only.

The guaranteed specifications are measured through the Analog Continuous Time PSoC blocks. The power levels for AGND refer to the power of the Analog Continuous Time PSoC block. The power levels for RefHi and RefLo refer to the Analog Reference Control register. The limits stated for AGND include the offset error of the AGND buffer local to the Analog Continuous Time PSoC block. Reference control power is high.

Table 3-12. Silicon Revision A – 5V DC Analog Reference Specifications

Symbol	Description	Min	Typ	Max	Units
BG	Bandgap Voltage Reference	1.274	1.30	1.326	V
–	AGND = Vdd/2[a]	Vdd/2 - 0.030	Vdd/2 - 0.004	Vdd/2 + 0.003	V
–	AGND = 2 x BandGap[a]	2 x BG - 0.043	2 x BG - 0.010	2 x BG + 0.024	V
–	AGND = P2[4] (P2[4] = Vdd/2)[a]	P2[4] - 0.013	P2[4]	P2[4] + 0.014	V
–	AGND = BandGap[a]	BG - 0.009	BG	BG + 0.009	V
–	AGND = 1.6 x BandGap[a]	1.6 x BG - 0.018	1.6 x BG	1.6 x BG + 0.018	V
–	AGND Block to Block Variation (AGND = Vdd/2)[a]	-0.034	0.000	0.034	V
–	RefHi = Vdd/2 + BandGap	Vdd/2 + BG - 0.140	Vdd/2 + BG - 0.018	Vdd/2 + BG + 0.103	V
–	RefHi = 3 x BandGap	3 x BG - 0.112	3 x BG - 0.018	3 x BG + 0.076	V
–	RefHi = 2 x BandGap + P2[6] (P2[6] = 1.3V)	2 x BG + P2[6] - 0.113	2 x BG + P2[6] - 0.018	2 x BG + P2[6] + 0.077	V
–	RefHi = P2[4] + BandGap (P2[4] = Vdd/2)	P2[4] + BG - 0.130	P2[4] + BG - 0.016	P2[4] + BG + 0.098	V
–	RefHi = P2[4] + P2[6] (P2[4] = Vdd/2, P2[6] = 1.3V)	P2[4] + P2[6] - 0.133	P2[4] + P2[6] - 0.016	P2[4] + P2[6] + 0.100	V
–	RefHi = 3.2 x BandGap	3.2 x BG - 0.112	3.2 x BG	3.2 x BG + 0.076	V
–	RefLo = Vdd/2 – BandGap	Vdd/2 - BG - 0.051	Vdd/2 - BG + 0.024	Vdd/2 - BG + 0.098	V
–	RefLo = BandGap	BG - 0.082	BG + 0.023	BG + 0.129	V
–	RefLo = 2 x BandGap - P2[6] (P2[6] = 1.3V)	2 x BG - P2[6] - 0.084	2 x BG - P2[6] + 0.025	2 x BG - P2[6] + 0.134	V
–	RefLo = P2[4] – BandGap (P2[4] = Vdd/2)	P2[4] - BG - 0.056	P2[4] - BG + 0.026	P2[4] - BG + 0.107	V
–	RefLo = P2[4]-P2[6] (P2[4] = Vdd/2, P2[6] = 1.3V)	P2[4] - P2[6] - 0.057	P2[4] - P2[6] + 0.026	P2[4] - P2[6] + 0.110	V

a. AGND tolerance includes the offsets of the local buffer in the PSoC block.

Table 3-13. Silicon Revision B – 5V DC Analog Reference Specifications

Symbol	Description	Min	Typ	Max	Units
BG	Bandgap Voltage Reference	1.28	1.30	1.32	V
–	AGND = Vdd/2[a]	Vdd/2 - 0.030	Vdd/2	Vdd/2 + 0.007	V
–	AGND = 2 x BandGap[a]	2 x BG - 0.043	2 x BG	2 x BG + 0.024	V
–	AGND = P2[4] (P2[4] = Vdd/2)[a]	P2[4] - 0.011	P2[4]	P2[4] + 0.011	V
–	AGND = BandGap[a]	BG - 0.009	BG	BG + 0.009	V
–	AGND = 1.6 x BandGap[a]	1.6 x BG - 0.018	1.6 x BG	1.6 x BG + 0.018	V
–	AGND Block to Block Variation (AGND = Vdd/2)[a]	-0.034	0.000	0.034	V
–	RefHi = Vdd/2 + BandGap	Vdd/2 + BG - 0.1	Vdd/2 + BG - 0.01	Vdd/2 + BG + 0.1	V
–	RefHi = 3 x BandGap	3 x BG - 0.06	3 x BG - 0.01	3 x BG + 0.06	V
–	RefHi = 2 x BandGap + P2[6] (P2[6] = 1.3V)	2 x BG + P2[6] - 0.06	2 x BG + P2[6] - 0.01	2 x BG + P2[6] + 0.06	V
–	RefHi = P2[4] + BandGap (P2[4] = Vdd/2)	P2[4] + BG - 0.06	P2[4] + BG - 0.01	P2[4] + BG + 0.06	V
–	RefHi = P2[4] + P2[6] (P2[4] = Vdd/2, P2[6] = 1.3V)	P2[4] + P2[6] - 0.06	P2[4] + P2[6] - 0.01	P2[4] + P2[6] + 0.06	V
–	RefHi = 3.2 x BandGap	3.2 x BG - 0.06	3.2 x BG - 0.01	3.2 x BG + 0.06	V
–	RefLo = Vdd/2 – BandGap	Vdd/2 - BG - 0.051	Vdd/2 - BG + 0.01	Vdd/2 - BG + 0.06	V
–	RefLo = BandGap	BG - 0.06	BG + 0.01	BG + 0.06	V
–	RefLo = 2 x BandGap - P2[6] (P2[6] = 1.3V)	2 x BG - P2[6] - 0.04	2 x BG - P2[6] + 0.01	2 x BG - P2[6] + 0.04	V
–	RefLo = P2[4] – BandGap (P2[4] = Vdd/2)	P2[4] - BG - 0.056	P2[4] - BG + 0.01	P2[4] - BG + 0.056	V
–	RefLo = P2[4]-P2[6] (P2[4] = Vdd/2, P2[6] = 1.3V)	P2[4] - P2[6] - 0.056	P2[4] - P2[6] + 0.01	P2[4] - P2[6] + 0.056	V

a. AGND tolerance includes the offsets of the local buffer in the PSoC block.

[+] Feedback

Table 3-14. Silicon Revision A – 3.3V DC Analog Reference Specifications

Symbol	Description	Min	Typ	Max	Units
BG	Bandgap Voltage Reference	1.274	1.30	1.326	V
–	AGND = Vdd/2[a]	Vdd/2 - 0.027	Vdd/2 - 0.003	Vdd/2 + 0.002	V
–	AGND = 2 x BandGap[a]	Not Allowed			
–	AGND = P2[4] (P2[4] = Vdd/2)	P2[4] - 0.008	P2[4] + 0.001	P2[4] + 0.009	V
–	AGND = BandGap[a]	BG - 0.009	BG	BG + 0.009	V
–	AGND = 1.6 x BandGap[a]	1.6 x BG - 0.018	1.6 x BG	1.6 x BG + 0.018	V
–	AGND Block to Block Variation (AGND = Vdd/2)[a]	-0.034	0.000	0.034	V
–	RefHi = Vdd/2 + BandGap	Not Allowed			
–	RefHi = 3 x BandGap	Not Allowed			
–	RefHi = 2 x BandGap + P2[6] (P2[6] = 0.5V)	Not Allowed			
–	RefHi = P2[4] + BandGap (P2[4] = Vdd/2)	Not Allowed			
–	RefHi = P2[4] + P2[6] (P2[4] = Vdd/2, P2[6] = 0.5V)	P2[4] + P2[6] - 0.075	P2[4] + P2[6] - 0.009	P2[4] + P2[6] + 0.057	V
–	RefHi = 3.2 x BandGap	Not Allowed			
–	RefLo = Vdd/2 - BandGap	Not Allowed			
–	RefLo = BandGap	Not Allowed			
–	RefLo = 2 x BandGap - P2[6] (P2[6] = 0.5V)	Not Allowed			
–	RefLo = P2[4] – BandGap (P2[4] = Vdd/2)	Not Allowed			
–	RefLo = P2[4]-P2[6] (P2[4] = Vdd/2, P2[6] = 0.5V)	P2[4] - P2[6] - 0.048	P2[4] - P2[6] + 0.022	P2[4] - P2[6] + 0.092	V

a. AGND tolerance includes the offsets of the local buffer in the PSoC block.

Note See Application Note AN2012 “Adjusting PSoC Microcontroller Trims for Dual Voltage-Range Operation” for information on trimming for operation at 3.3V.

Table 3-15. Silicon Revision B – 3.3V DC Analog Reference Specifications

Symbol	Description	Min	Typ	Max	Units
BG	Bandgap Voltage Reference	1.28	1.30	1.32	V
–	AGND = Vdd/2[a]	Vdd/2 - 0.027	Vdd/2	Vdd/2 + 0.005	V
–	AGND = 2 x BandGap[a]	Not Allowed			
–	AGND = P2[4] (P2[4] = Vdd/2)	P2[4] - 0.008	P2[4]	P2[4] + 0.009	V
–	AGND = BandGap[a]	BG - 0.009	BG	BG + 0.009	V
–	AGND = 1.6 x BandGap[a]	1.6 x BG - 0.018	1.6 x BG	1.6 x BG + 0.018	V
–	AGND Block to Block Variation (AGND = Vdd/2)[a]	-0.034	0.000	0.034	mV
–	RefHi = Vdd/2 + BandGap	Not Allowed			
–	RefHi = 3 x BandGap	Not Allowed			
–	RefHi = 2 x BandGap + P2[6] (P2[6] = 0.5V)	Not Allowed			
–	RefHi = P2[4] + BandGap (P2[4] = Vdd/2)	Not Allowed			
–	RefHi = P2[4] + P2[6] (P2[4] = Vdd/2, P2[6] = 0.5V)	P2[4] + P2[6] - 0.06	P2[4] + P2[6] - 0.01	P2[4] + P2[6] + 0.057	V
–	RefHi = 3.2 x BandGap	Not Allowed			
–	RefLo = Vdd/2 - BandGap	Not Allowed			
–	RefLo = BandGap	Not Allowed			
–	RefLo = 2 x BandGap - P2[6] (P2[6] = 0.5V)	Not Allowed			
–	RefLo = P2[4] – BandGap (P2[4] = Vdd/2)	Not Allowed			
–	RefLo = P2[4]-P2[6] (P2[4] = Vdd/2, P2[6] = 0.5V)	P2[4] - P2[6] - 0.048	P2[4] - P2[6] + 0.01	P2[4] - P2[6] + 0.048	V

a. AGND tolerance includes the offsets of the local buffer in the PSoC block.

Note See Application Note AN2012 “Adjusting PSoC Microcontroller Trims for Dual Voltage-Range Operation” for information on trimming for operation at 3.3V.

[+] Feedback

3.3.8 DC Analog PSoC Block Specifications

The following table lists guaranteed maximum and minimum specifications for the voltage and temperature ranges: 4.75V to 5.25V and -40°C ≤ T_A ≤ 85°C, or 3.0V to 3.6V and -40°C ≤ T_A ≤ 85°C, respectively. Typical parameters apply to 5V and 3.3V at 25°C and are for design guidance only.

Table 3-16. DC Analog PSoC Block Specifications

Symbol	Description	Min	Typ	Max	Units	Notes
R_{CT}	Resistor Unit Value (Continuous Time)	–	12.2	–	kΩ	
C_{SC}	Capacitor Unit Value (Switch Cap)	–	80	–	fF	

3.3.9 DC POR and LVD Specifications

The following table lists guaranteed maximum and minimum specifications for the voltage and temperature ranges: 4.75V to 5.25V and -40°C ≤ T_A ≤ 85°C, or 3.0V to 3.6V and -40°C ≤ T_A ≤ 85°C, respectively. Typical parameters apply to 5V and 3.3V at 25°C and are for design guidance only.

Note The bits PORLEV and VM in the table below refer to bits in the VLT_CR register. See the *PSoC Mixed-Signal Array Technical Reference Manual* for more information on the VLT_CR register.

Table 3-17. DC POR and LVD Specifications

Symbol	Description	Min	Typ	Max	Units	Notes
	Vdd Value for PPOR Trip (positive ramp)					Vdd must be greater than or equal to 2.5V during startup, reset from the XRES pin, or reset from Watchdog.
V_{PPOR0R}	PORLEV[1:0] = 00b		2.91		V	
V_{PPOR1R}	PORLEV[1:0] = 01b	–	4.39	–	V	
V_{PPOR2R}	PORLEV[1:0] = 10b		4.55		V	
	Vdd Value for PPOR Trip (negative ramp)					
V_{PPOR0}	PORLEV[1:0] = 00b		2.82		V	
V_{PPOR1}	PORLEV[1:0] = 01b	–	4.39	–	V	
V_{PPOR2}	PORLEV[1:0] = 10b		4.55		V	
	PPOR Hysteresis					
V_{PH0}	PORLEV[1:0] = 00b	–	92	–	mV	
V_{PH1}	PORLEV[1:0] = 01b	–	0	–	mV	
V_{PH2}	PORLEV[1:0] = 10b	–	0	–	mV	
	Vdd Value for LVD Trip					
V_{LVD0}	VM[2:0] = 000b	2.86	2.92	2.98[a]	V	
V_{LVD1}	VM[2:0] = 001b	2.96	3.02	3.08	V	
V_{LVD2}	VM[2:0] = 010b	3.07	3.13	3.20	V	
V_{LVD3}	VM[2:0] = 011b	3.92	4.00	4.08	V	
V_{LVD4}	VM[2:0] = 100b	4.39	4.48	4.57	V	
V_{LVD5}	VM[2:0] = 101b	4.55	4.64	4.74[b]	V	
V_{LVD6}	VM[2:0] = 110b	4.63	4.73	4.82	V	
V_{LVD7}	VM[2:0] = 111b	4.72	4.81	4.91	V	
	Vdd Value for PUMP Trip					
V_{PUMP0}	VM[2:0] = 000b	2.96	3.02	3.08	V	
V_{PUMP1}	VM[2:0] = 001b	3.03	3.10	3.16	V	
V_{PUMP2}	VM[2:0] = 010b	3.18	3.25	3.32	V	
V_{PUMP3}	VM[2:0] = 011b	4.11	4.19	4.28	V	
V_{PUMP4}	VM[2:0] = 100b	4.55	4.64	4.74	V	
V_{PUMP5}	VM[2:0] = 101b	4.63	4.73	4.82	V	
V_{PUMP6}	VM[2:0] = 110b	4.72	4.82	4.91	V	
V_{PUMP7}	VM[2:0] = 111b	4.90	5.00	5.10	V	

a. Always greater than 50 mV above PPOR (PORLEV = 00) for falling supply.
b. Always greater than 50 mV above PPOR (PORLEV = 10) for falling supply.

[+] Feedback

3.3.10 DC Programming Specifications

The following table lists guaranteed maximum and minimum specifications for the voltage and temperature ranges: 4.75V to 5.25V and -40°C ≤ T_A ≤ 85°C, or 3.0V to 3.6V and -40°C ≤ T_A ≤ 85°C, respectively. Typical parameters apply to 5V and 3.3V at 25°C and are for design guidance only.

Table 3-18. DC Programming Specifications

Symbol	Description	Min	Typ	Max	Units	Notes
I_{DDP}	Supply Current During Programming or Verify	–	5	25	mA	
V_{ILP}	Input Low Voltage During Programming or Verify	–	–	0.8	V	
V_{IHP}	Input High Voltage During Programming or Verify	2.2	–	–	V	
I_{ILP}	Input Current when Applying Vilp to P1[0] or P1[1] During Programming or Verify	–	–	0.2	mA	Driving internal pull-down resistor.
I_{IHP}	Input Current when Applying Vihp to P1[0] or P1[1] During Programming or Verify	–	–	1.5	mA	Driving internal pull-down resistor.
V_{OLV}	Output Low Voltage During Programming or Verify	–	–	Vss + 0.75	V	
V_{OHV}	Output High Voltage During Programming or Verify	Vdd - 1.0	–	Vdd	V	
$Flash_{ENPB}$	Flash Endurance (per block)	50,000	–	–	–	Erase/write cycles per block.
$Flash_{ENT}$	Flash Endurance (total)[a]	1,800,000	–	–	–	Erase/write cycles.
$Flash_{DR}$	Flash Data Retention	10	–	–	Years	

a. A maximum of 36 x 50,000 block endurance cycles is allowed. This may be balanced between operations on 36x1 blocks of 50,000 maximum cycles each, 36x2 blocks of 25,000 maximum cycles each, or 36x4 blocks of 12,500 maximum cycles each (to limit the total number of cycles to 36x50,000 and that no single block ever sees more than 50,000 cycles).

For the full industrial range, the user must employ a temperature sensor user module (FlashTemp) and feed the result to the temperature argument before writing. Refer to the Flash APIs Application Note AN2015 at http://www.cypress.com under Application Notes for more information.

[+] Feedback

3.4 AC Electrical Characteristics

3.4.1 AC Chip-Level Specifications

The following table lists guaranteed maximum and minimum specifications for the voltage and temperature ranges: 4.75V to 5.25V and -40°C ≤ T_A ≤ 85°C, or 3.0V to 3.6V and -40°C ≤ T_A ≤ 85°C, respectively. Typical parameters apply to 5V and 3.3V at 25°C and are for design guidance only.

Table 3-19. AC Chip-Level Specifications

Symbol	Description	Min	Typ	Max	Units	Notes
F_{IMO}	Internal Main Oscillator Frequency	23.4	24	24.6[a]	MHz	Trimmed. Utilizing factory trim values.
F_{CPU1}	CPU Frequency (5V Nominal)	0.93	24	24.6[a,b]	MHz	Trimmed. Utilizing factory trim values.
F_{CPU2}	CPU Frequency (3.3V Nominal)	0.93	12	12.3[b,c]	MHz	Trimmed. Utilizing factory trim values.
F_{48M}	Digital PSoC Block Frequency	0	48	49.2[a,b,d]	MHz	Refer to the AC Digital Block Specifications below.
F_{24M}	Digital PSoC Block Frequency	0	24	24.6[b, d]	MHz	
F_{32K1}	Internal Low Speed Oscillator Frequency	15	32	64	kHz	
F_{32K2}	External Crystal Oscillator	–	32.768	–	kHz	Accuracy is capacitor and crystal dependent. 50% duty cycle.
F_{PLL}	PLL Frequency	–	23.986	–	MHz	Multiple (x732) of crystal frequency.
Jitter24M2	24 MHz Period Jitter (PLL)	–	–	600	ps	
$T_{PLLSLEW}$	PLL Lock Time	0.5	–	10	ms	
$T_{PLLSLEWS-LOW}$	PLL Lock Time for Low Gain Setting	0.5	–	50	ms	
T_{OS}	External Crystal Oscillator Startup to 1%	–	1700	2620	ms	
T_{OSACC}	External Crystal Oscillator Startup to 100 ppm	–	2800	3800	ms	The crystal oscillator frequency is within 100 ppm of its final value by the end of the T_{osacc} period. Correct operation assumes a properly loaded 1 uW maximum drive level 32.768 kHz crystal. 3.0V ≤ Vdd ≤ 5.5V, -40 ^{0}C ≤ T_A ≤ 85 ^{0}C.
Jitter32k	32 kHz Period Jitter	–	100		ns	
T_{XRST}	External Reset Pulse Width	10	–	–	µs	
DC24M	24 MHz Duty Cycle	40	50	60	%	
Step24M	24 MHz Trim Step Size	–	50	–	kHz	
Fout48M	48 MHz Output Frequency	46.8	48.0	49.2[a,c]	MHz	Trimmed. Utilizing factory trim values.
Jitter24M1	24 MHz Period Jitter (IMO)	–	600		ps	
F_{MAX}	Maximum frequency of signal on row input or row output.	–	–	12.3	MHz	
T_{RAMP}	Supply Ramp Time	0	–	–	µs	

a. 4.75V < Vdd < 5.25V.
b. Accuracy derived from Internal Main Oscillator with appropriate trim for Vdd range.
c. 3.0V < Vdd < 3.6V. See Application Note AN2012 “Adjusting PSoC Microcontroller Trims for Dual Voltage-Range Operation” for information on trimming for operation at 3.3V.
d. See the individual user module data sheets for information on maximum frequencies for user modules.

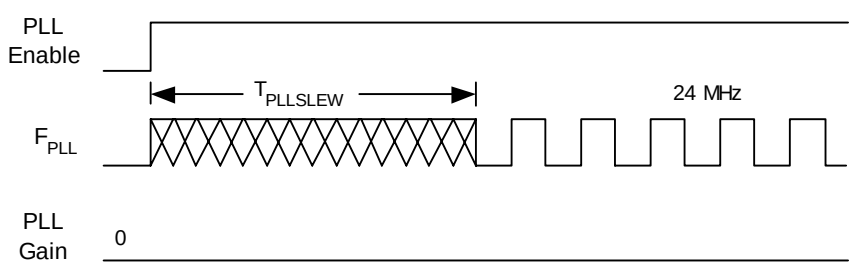

Figure 3-3. PLL Lock Timing Diagram

[+] Feedback

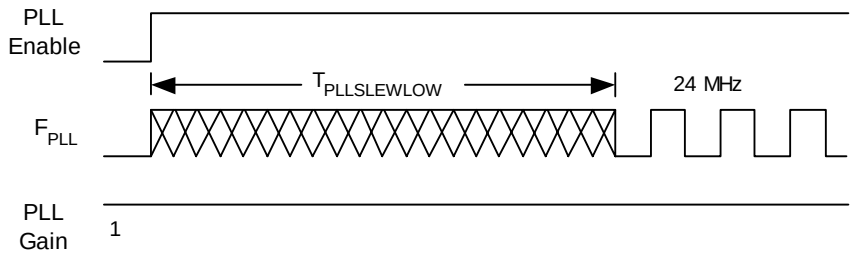

Figure 3-4. PLL Lock for Low Gain Setting Timing Diagram

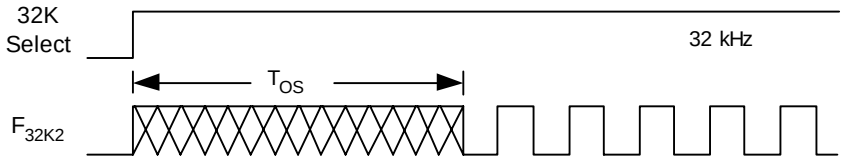

Figure 3-5. External Crystal Oscillator Startup Timing Diagram

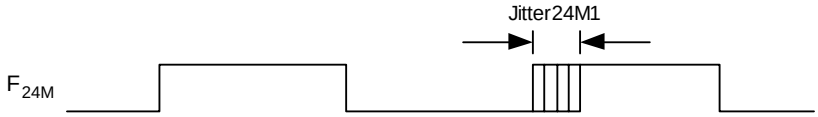

Figure 3-6. 24 MHz Period Jitter (IMO) Timing Diagram

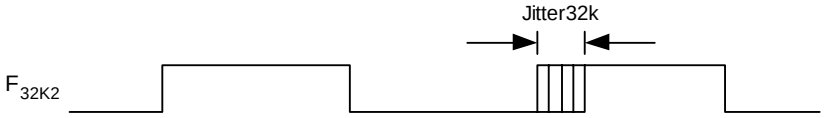

Figure 3-7. 32 kHz Period Jitter (ECO) Timing Diagram

[+] Feedback

3.4.2 AC General Purpose IO Specifications

The following table lists guaranteed maximum and minimum specifications for the voltage and temperature ranges: 4.75V to 5.25V and -40°C ≤ T_A ≤ 85°C, or 3.0V to 3.6V and -40°C ≤ T_A ≤ 85°C, respectively. Typical parameters apply to 5V and 3.3V at 25°C and are for design guidance only.

Table 3-20. AC GPIO Specifications

Symbol	Description	Min	Typ	Max	Units	Notes
F_{GPIO}	GPIO Operating Frequency	0	–	12	MHz	Normal Strong Mode
TRiseF	Rise Time, Normal Strong Mode, Cload = 50 pF	3	–	18	ns	Vdd = 4.5 to 5.25V, 10% - 90%
TFallF	Fall Time, Normal Strong Mode, Cload = 50 pF	2	–	18	ns	Vdd = 4.5 to 5.25V, 10% - 90%
TRiseS	Rise Time, Slow Strong Mode, Cload = 50 pF	10	27	–	ns	Vdd = 3 to 5.25V, 10% - 90%
TFallS	Fall Time, Slow Strong Mode, Cload = 50 pF	10	22	–	ns	Vdd = 3 to 5.25V, 10% - 90%

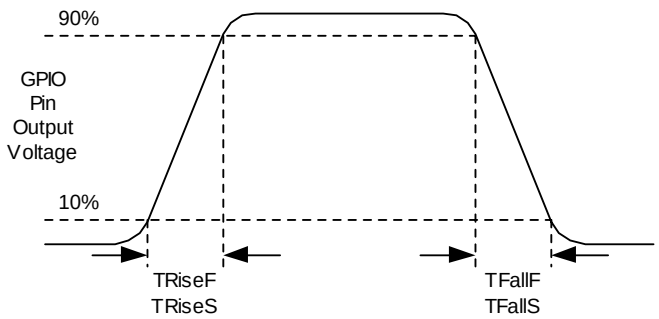

Figure 3-8. GPIO Timing Diagram

[+] Feedback

3.4.3 AC Operational Amplifier Specifications

The following tables list guaranteed maximum and minimum specifications for the voltage and temperature ranges: 4.75V to 5.25V and -40°C ≤ T_A ≤ 85°C, or 3.0V to 3.6V and -40°C ≤ T_A ≤ 85°C, respectively. Typical parameters apply to 5V and 3.3V at 25°C and are for design guidance only.

Settling times, slew rates, and gain bandwidth are based on the Analog Continuous Time PSoC block.

Power = High and Opamp Bias = High is not supported at 3.3V.

Table 3-21. 5V AC Operational Amplifier Specifications

Symbol	Description	Min	Typ	Max	Units	Notes
T_{ROA}	Rising Settling Time from 80% of ΔV to 0.1% of ΔV (10 pF load, Unity Gain)					
	Power = Low, Opamp Bias = Low	–	–	3.9	µs	
	Power = Medium, Opamp Bias = High	–	–	0.72	µs	
	Power = High, Opamp Bias = High	–	–	0.62	µs	
T_{SOA}	Falling Settling Time from 20% of ΔV to 0.1% of ΔV (10 pF load, Unity Gain)					
	Power = Low, Opamp Bias = Low	–	–	5.9	µs	
	Power = Medium, Opamp Bias = High	–	–	0.92	µs	
	Power = High, Opamp Bias = High	–	–	0.72	µs	
SR_{ROA}	Rising Slew Rate (20% to 80%)(10 pF load, Unity Gain)					
	Power = Low, Opamp Bias = Low	0.15	–	–	V/µs	
	Power = Medium, Opamp Bias = High	1.7	–	–	V/µs	
	Power = High, Opamp Bias = High	6.5	–	–	V/µs	
SR_{FOA}	Falling Slew Rate (20% to 80%)(10 pF load, Unity Gain)					
	Power = Low, Opamp Bias = Low	0.01	–	–	V/µs	
	Power = Medium, Opamp Bias = High	0.5	–	–	V/µs	
	Power = High, Opamp Bias = High	4.0	–	–	V/µs	
BW_{OA}	Gain Bandwidth Product					
	Power = Low, Opamp Bias = Low	0.75	–	–	MHz	
	Power = Medium, Opamp Bias = High	3.1	–	–	MHz	
	Power = High, Opamp Bias = High	5.4	–	–	MHz	
E_{NOA}	Noise at 1 kHz (Power = Medium, Opamp Bias = High)	–	100	–	nV/rt-Hz	

Table 3-22. 3.3V AC Operational Amplifier Specifications

Symbol	Description	Min	Typ	Max	Units	Notes
T_{ROA}	Rising Settling Time from 80% of ΔV to 0.1% of ΔV (10 pF load, Unity Gain)					
	Power = Low, Opamp Bias = Low	–	–	3.92	µs	
	Power = Low, Opamp Bias = High	–	–	0.72	µs	
T_{SOA}	Falling Settling Time from 20% of ΔV to 0.1% of ΔV (10 pF load, Unity Gain)					
	Power = Low, Opamp Bias = Low	–	–	5.41	µs	
	Power = Medium, Opamp Bias = High	–	–	0.72	µs	
SR_{ROA}	Rising Slew Rate (20% to 80%)(10 pF load, Unity Gain)					
	Power = Low, Opamp Bias = Low	0.31	–	–	V/µs	
	Power = Medium, Opamp Bias = High	2.7	–	–	V/µs	
SR_{FOA}	Falling Slew Rate (20% to 80%)(10 pF load, Unity Gain)					
	Power = Low, Opamp Bias = Low	0.24	–	–	V/µs	
	Power = Medium, Opamp Bias = High	1.8	–	–	V/µs	
BW_{OA}	Gain Bandwidth Product					
	Power = Low, Opamp Bias = Low	0.67	–	–	MHz	
	Power = Medium, Opamp Bias = High	2.8	–	–	MHz	
E_{NOA}	Noise at 1 kHz (Power = Medium, Opamp Bias = High)	–	100	–	nV/rt-Hz	

[+] Feedback

When bypassed by a capacitor on P2[4], the noise of the analog ground signal distributed to each block is reduced by a factor of up to 5 (14 dB). This is at frequencies above the corner frequency defined by the on-chip 8.1k resistance and the external capacitor.

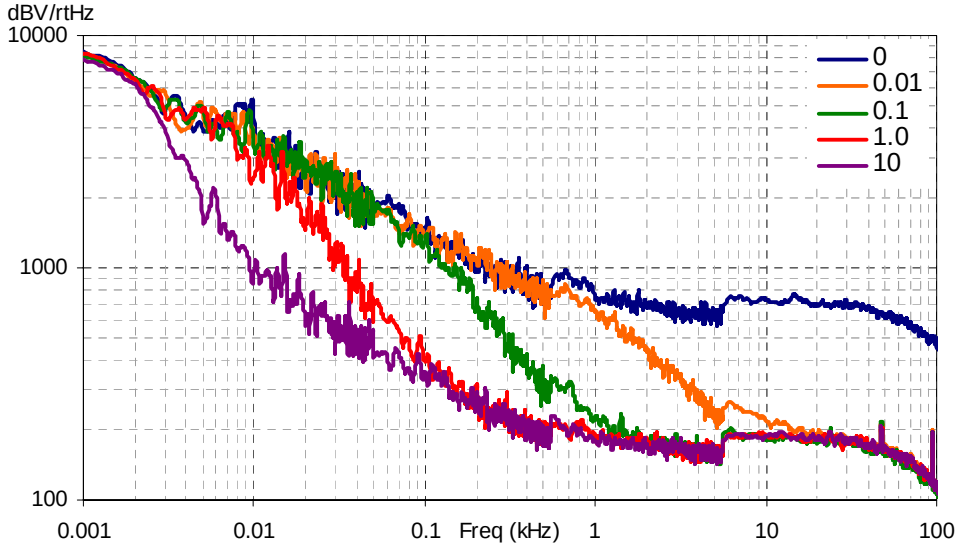

Figure 3-9. Typical AGND Noise with P2[4] Bypass

At low frequencies, the opamp noise is proportional to 1/f, power independent, and determined by device geometry. At high frequencies, increased power level reduces the noise spectrum level.

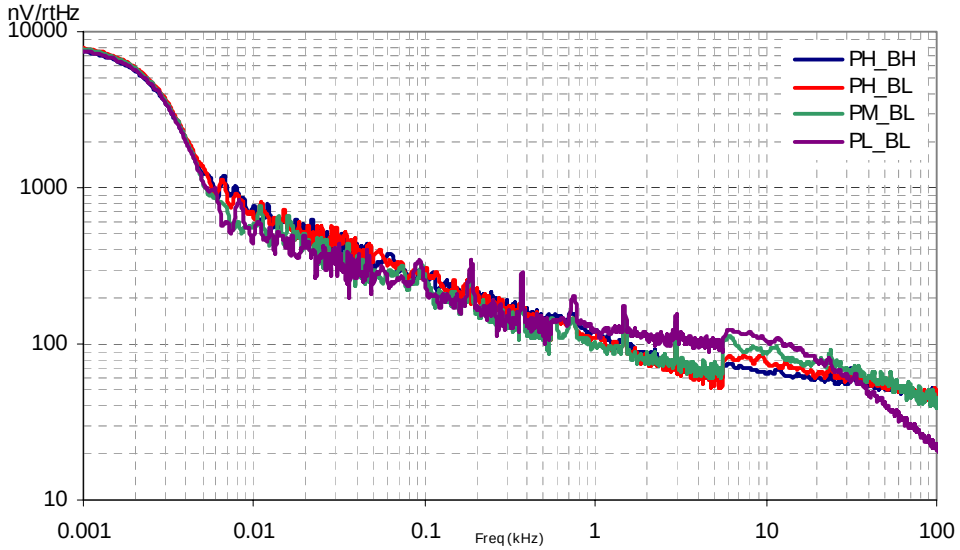

Figure 3-10. Typical Opamp Noise

[+] Feedback

3.4.4 AC Low Power Comparator Specifications

The following table lists guaranteed maximum and minimum specifications for the voltage and temperature ranges: 4.75V to 5.25V and -40°C ≤ T_A ≤ 85°C, 3.0V to 3.6V and -40°C ≤ T_A ≤ 85°C, or 2.4V to 3.0V and -40°C ≤ T_A ≤ 85°C, respectively. Typical parameters apply to 5V at 25°C and are for design guidance only.

Table 3-23. AC Low Power Comparator Specifications

Symbol	Description	Min	Typ	Max	Units	Notes
T_{RLPC}	LPC response time	–	–	50	µs	≥ 50 mV overdrive comparator reference set within V_{REFLPC}.

3.4.5 AC Digital Block Specifications

The following table lists guaranteed maximum and minimum specifications for the voltage and temperature ranges: 4.75V to 5.25V and -40°C ≤ T_A ≤ 85°C, or 3.0V to 3.6V and -40°C ≤ T_A ≤ 85°C, respectively. Typical parameters apply to 5V and 3.3V at 25°C and are for design guidance only.

Table 3-24. AC Digital Block Specifications

Function	Description	Min	Typ	Max	Units	Notes
All Functions	Maximum Block Clocking Frequency (> 4.75V)			49.2		4.75V < Vdd < 5.25V.
	Maximum Block Clocking Frequency (< 4.75V)			24.6		3.0V < Vdd < 4.75V.
Timer	Capture Pulse Width	50[a]	–	–	ns	
	Maximum Frequency, No Capture	–	–	49.2	MHz	4.75V < Vdd < 5.25V.
	Maximum Frequency, With Capture	–	–	24.6	MHz	
Counter	Enable Pulse Width	50[a]	–	–	ns	
	Maximum Frequency, No Enable Input	–	–	49.2	MHz	4.75V < Vdd < 5.25V.
	Maximum Frequency, Enable Input	–	–	24.6	MHz	
Dead Band	Kill Pulse Width:					
	Asynchronous Restart Mode	20	–	–	ns	
	Synchronous Restart Mode	50[a]	–	–	ns	
	Disable Mode	50[a]	–	–	ns	
	Maximum Frequency	–	–	49.2	MHz	4.75V < Vdd < 5.25V.
CRCPRS (PRS Mode)	Maximum Input Clock Frequency	–	–	49.2	MHz	4.75V < Vdd < 5.25V.
CRCPRS (CRC Mode)	Maximum Input Clock Frequency	–	–	24.6	MHz	
SPIM	Maximum Input Clock Frequency	–	–	8.2	MHz	Maximum data rate at 4.1 MHz due to 2 x over clocking.
SPIS	Maximum Input Clock Frequency	–	–	4.1	ns	
	Width of SS_ Negated Between Transmissions	50[a]	–	–	ns	
Transmitter	Maximum Input Clock Frequency [b]					
	Silicon A	–	–	16.4	MHz	Maximum data rate at 2.05 MHz due to 8 x over clocking.
	Silicon B	–	–	24.6	MHz	Maximum data rate at 3.08 MHz due to 8 x over clocking.
	Silicon B Maximum Input Clock Frequency with Vdd ≥ 4.75V, 2 Stop Bits	–	–	49.2	MHz	Maximum data rate at 6.15 MHz due to 8 x over clocking.
Receiver	Maximum Input Clock Frequency [b]					
	Silicon A	–	–	16.4	MHz	Maximum data rate at 2.05 MHz due to 8 x over clocking.
	Silicon B	–	–	24.6	MHz	Maximum data rate at 3.08 MHz due to 8 x over clocking.
	Silicon B Maximum Input Clock Frequency with Vdd ≥ 4.75V, 2 Stop Bits	–	–	49.2	MHz	Maximum data rate at 6.15 MHz due to 8 x over clocking.

a. 50 ns minimum input pulse width is based on the input synchronizers running at 24 MHz (42 ns nominal period).
b. Refer to the Ordering Information chapter on page 48.

[+] Feedback

3.4.6 AC Analog Output Buffer Specifications

The following tables list guaranteed maximum and minimum specifications for the voltage and temperature ranges: 4.75V to 5.25V and -40°C ≤ T_A ≤ 85°C, or 3.0V to 3.6V and -40°C ≤ T_A ≤ 85°C, respectively. Typical parameters apply to 5V and 3.3V at 25°C and are for design guidance only.

Table 3-25. 5V AC Analog Output Buffer Specifications

Symbol	Description	Min	Typ	Max	Units	Notes
T_{ROB}	Rising Settling Time to 0.1%, 1V Step, 100pF Load					
	Power = Low	–	–	2.5	µs	
	Power = High	–	–	2.5	µs	
T_{SOB}	Falling Settling Time to 0.1%, 1V Step, 100pF Load					
	Power = Low	–	–	2.2	µs	
	Power = High	–	–	2.2	µs	
SR_{ROB}	Rising Slew Rate (20% to 80%), 1V Step, 100pF Load					
	Power = Low	0.65	–	–	V/µs	
	Power = High	0.65	–	–	V/µs	
SR_{FOB}	Falling Slew Rate (80% to 20%), 1V Step, 100pF Load					
	Power = Low	0.65	–	–	V/µs	
	Power = High	0.65	–	–	V/µs	
BW_{OB}	Small Signal Bandwidth, 20mV_{pp}, 3dB BW, 100pF Load					
	Power = Low	0.8	–	–	MHz	
	Power = High	0.8	–	–	MHz	
BW_{OB}	Large Signal Bandwidth, 1V_{pp}, 3dB BW, 100pF Load					
	Power = Low	300	–	–	kHz	
	Power = High	300	–	–	kHz	

Table 3-26. 3.3V AC Analog Output Buffer Specifications

Symbol	Description	Min	Typ	Max	Units	Notes
T_{ROB}	Rising Settling Time to 0.1%, 1V Step, 100pF Load					
	Power = Low	–	–	3.8	µs	
	Power = High	–	–	3.8	µs	
T_{SOB}	Falling Settling Time to 0.1%, 1V Step, 100pF Load					
	Power = Low	–	–	2.6	µs	
	Power = High	–	–	2.6	µs	
SR_{ROB}	Rising Slew Rate (20% to 80%), 1V Step, 100pF Load					
	Power = Low	0.5	–	–	V/µs	
	Power = High	0.5	–	–	V/µs	
SR_{FOB}	Falling Slew Rate (80% to 20%), 1V Step, 100pF Load					
	Power = Low	0.5	–	–	V/µs	
	Power = High	0.5	–	–	V/µs	
BW_{OB}	Small Signal Bandwidth, 20mV_{pp}, 3dB BW, 100pF Load					
	Power = Low	0.7	–	–	MHz	
	Power = High	0.7	–	–	MHz	
BW_{OB}	Large Signal Bandwidth, 1V_{pp}, 3dB BW, 100pF Load					
	Power = Low	200	–	–	kHz	
	Power = High	200	–	–	kHz	

[+] Feedback

3.4.7 AC External Clock Specifications

The following tables list guaranteed maximum and minimum specifications for the voltage and temperature ranges: 4.75V to 5.25V and -40°C ≤ T_A ≤ 85°C, or 3.0V to 3.6V and -40°C ≤ T_A ≤ 85°C, respectively. Typical parameters apply to 5V and 3.3V at 25°C and are for design guidance only.

Table 3-27. 5V AC External Clock Specifications

Symbol	Description	Min	Typ	Max	Units	Notes
F_{OSCEXT}	Frequency	0.093	–	24.6	MHz	
–	High Period	20.6	–	5300	ns	
–	Low Period	20.6	–	–	ns	
–	Power Up IMO to Switch	150	–	–	µs	

Table 3-28. 3.3V AC External Clock Specifications

Symbol	Description	Min	Typ	Max	Units	Notes
F_{OSCEXT}	Frequency with CPU Clock divide by 1[a]	0.093	–	12.3	MHz	
F_{OSCEXT}	Frequency with CPU Clock divide by 2 or greater[b]	0.186	–	24.6	MHz	
–	High Period with CPU Clock divide by 1	41.7	–	5300	ns	
–	Low Period with CPU Clock divide by 1	41.7	–	–	ns	
–	Power Up IMO to Switch	150	–	–	µs	

a. Maximum CPU frequency is 12 MHz at 3.3V. With the CPU clock divider set to 1, the external clock must adhere to the maximum frequency and duty cycle requirements.
b. If the frequency of the external clock is greater than 12 MHz, the CPU clock divider must be set to 2 or greater. In this case, the CPU clock divider will ensure that the fifty percent duty cycle requirement is met.

3.4.8 AC Programming Specifications

The following table lists guaranteed maximum and minimum specifications for the voltage and temperature ranges: 4.75V to 5.25V and -40°C ≤ T_A ≤ 85°C, or 3.0V to 3.6V and -40°C ≤ T_A ≤ 85°C, respectively. Typical parameters apply to 5V and 3.3V at 25°C and are for design guidance only.

Table 3-29. AC Programming Specifications

Symbol	Description	Min	Typ	Max	Units	Notes
T_{RSCLK}	Rise Time of SCLK	1	–	20	ns	
T_{FSCLK}	Fall Time of SCLK	1	–	20	ns	
T_{SSCLK}	Data Set up Time to Falling Edge of SCLK	40	–	–	ns	
T_{HSCLK}	Data Hold Time from Falling Edge of SCLK	40	–	–	ns	
F_{SCLK}	Frequency of SCLK	0	–	8	MHz	
T_{ERASEB}	Flash Erase Time (Block)	–	10	–	ms	
T_{WRITE}	Flash Block Write Time	–	10	–	ms	
T_{DSCLK}	Data Out Delay from Falling Edge of SCLK	–	–	45	ns	Vdd > 3.6
T_{DSCLK3}	Data Out Delay from Falling Edge of SCLK	–	–	50	ns	3.0 ≤ Vdd ≤ 3.6

[+] Feedback

3.4.9 AC I²C Specifications

The following table lists guaranteed maximum and minimum specifications for the voltage and temperature ranges: 4.75V to 5.25V and -40°C ≤ T_A ≤ 85°C, or 3.0V to 3.6V and -40°C ≤ T_A ≤ 85°C, respectively. Typical parameters apply to 5V and 3.3V at 25°C and are for design guidance only.

Table 3-30. AC Characteristics of the I²C SDA and SCL Pins

Symbol	Description	Standard Mode		Fast Mode		Units	Notes
		Min	Max	Min	Max		
F_{SCLI2C}	SCL Clock Frequency	0	100	0	400	kHz	
$T_{HDSTAI2C}$	Hold Time (repeated) START Condition. After this period, the first clock pulse is generated.	4.0	–	0.6	–	µs	
T_{LOWI2C}	LOW Period of the SCL Clock	4.7	–	1.3	–	µs	
$T_{HIGHI2C}$	HIGH Period of the SCL Clock	4.0	–	0.6	–	µs	
$T_{SUSTAI2C}$	Set-up Time for a Repeated START Condition	4.7	–	0.6	–	µs	
$T_{HDDATI2C}$	Data Hold Time	0	–	0	–	µs	
$T_{SUDATI2C}$	Data Set-up Time	250	–	100[a]	–	ns	
$T_{SUSTOI2C}$	Set-up Time for STOP Condition	4.0	–	0.6	–	µs	
T_{BUFI2C}	Bus Free Time Between a STOP and START Condition	4.7	–	1.3	–	µs	
T_{SPI2C}	Pulse Width of spikes are suppressed by the input filter.	–	–	0	50	ns	

a. A Fast-Mode I2C-bus device can be used in a Standard-Mode I2C-bus system, but the requirement $t_{SU;DAT} \geq 250$ ns must then be met. This will automatically be the case if the device does not stretch the LOW period of the SCL signal. If such device does stretch the LOW period of the SCL signal, it must output the next data bit to the SDA line $t_{rmax} + t_{SU;DAT} = 1000 + 250 = 1250$ ns (according to the Standard-Mode I2C-bus specification) before the SCL line is released.

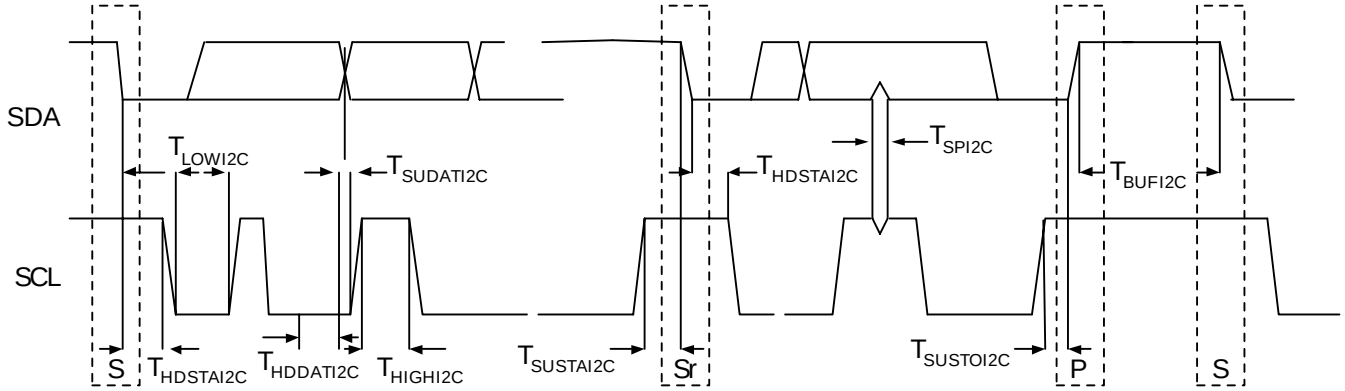

Figure 3-11. Definition for Timing for Fast/Standard Mode on the I²C Bus

[+] Feedback

4. Packaging Information

This chapter illustrates the packaging specifications for the CY8C27x43 PSoC device, along with the thermal impedances for each package and the typical package capacitance on crystal pins.

Important Note Emulation tools may require a larger area on the target PCB than the chip's footprint. For a detailed description of the emulation tools' dimensions, refer to the document titled *PSoC Emulator Pod Dimensions* at http://www.cypress.com/design/MR10161.

4.1 Packaging Dimensions

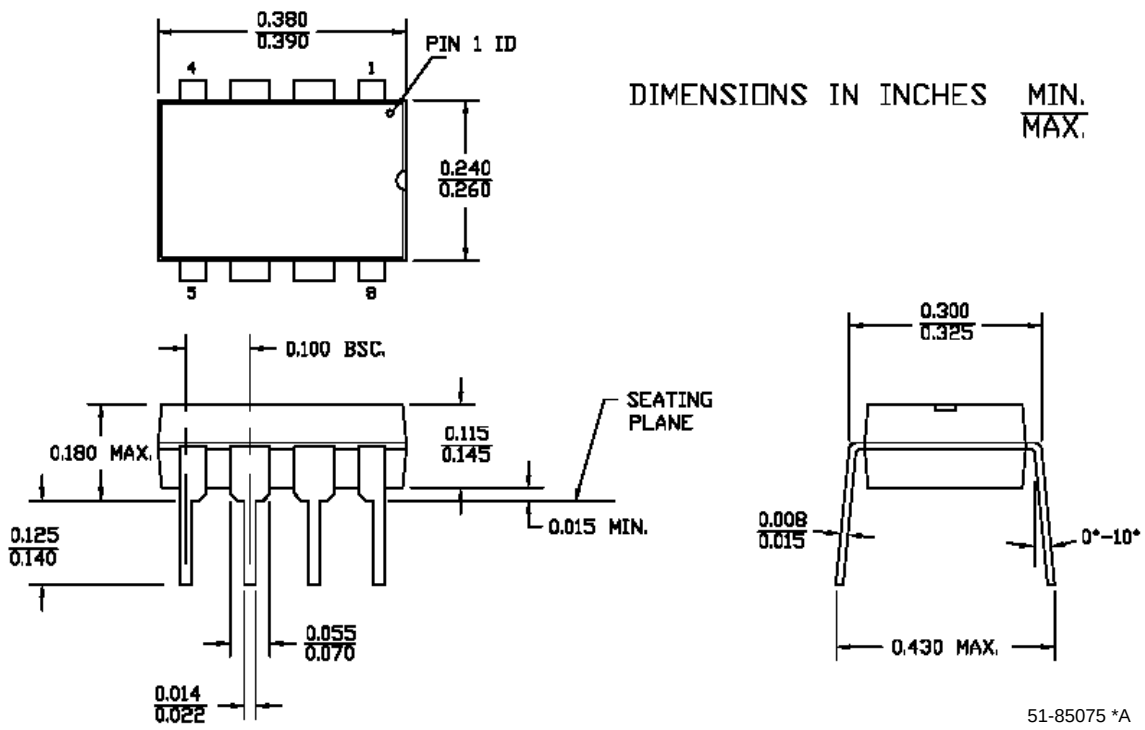

Figure 4-1. 8-Lead (300-Mil) PDIP

[+] Feedback

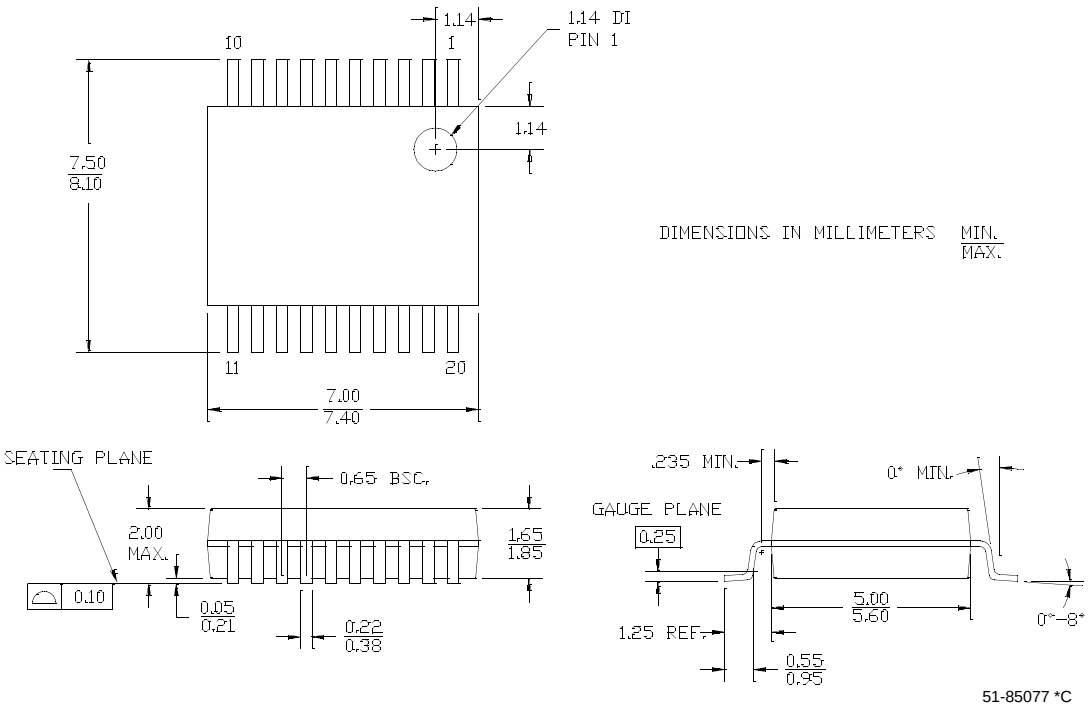

Figure 4-2. 20-Lead (210-Mil) SSOP

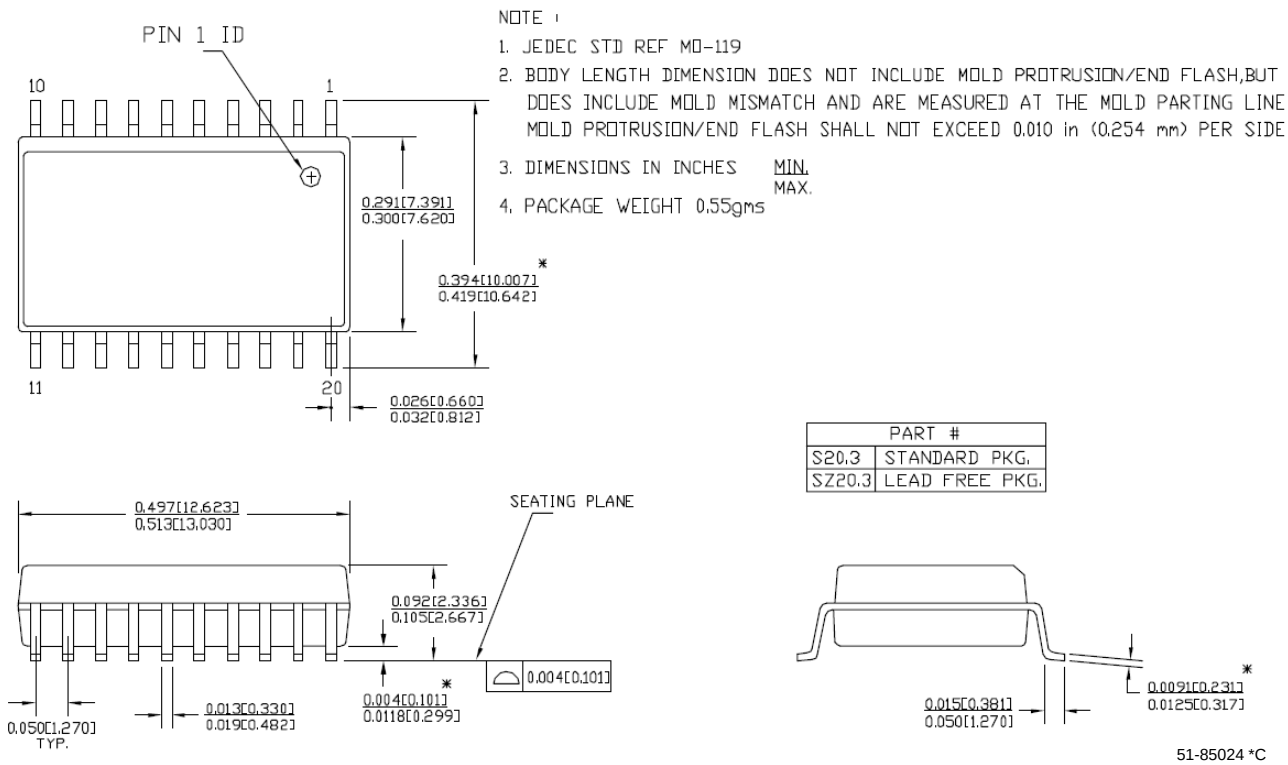

Figure 4-3. 20-Lead (300-Mil) Molded SOIC

[+] Feedback

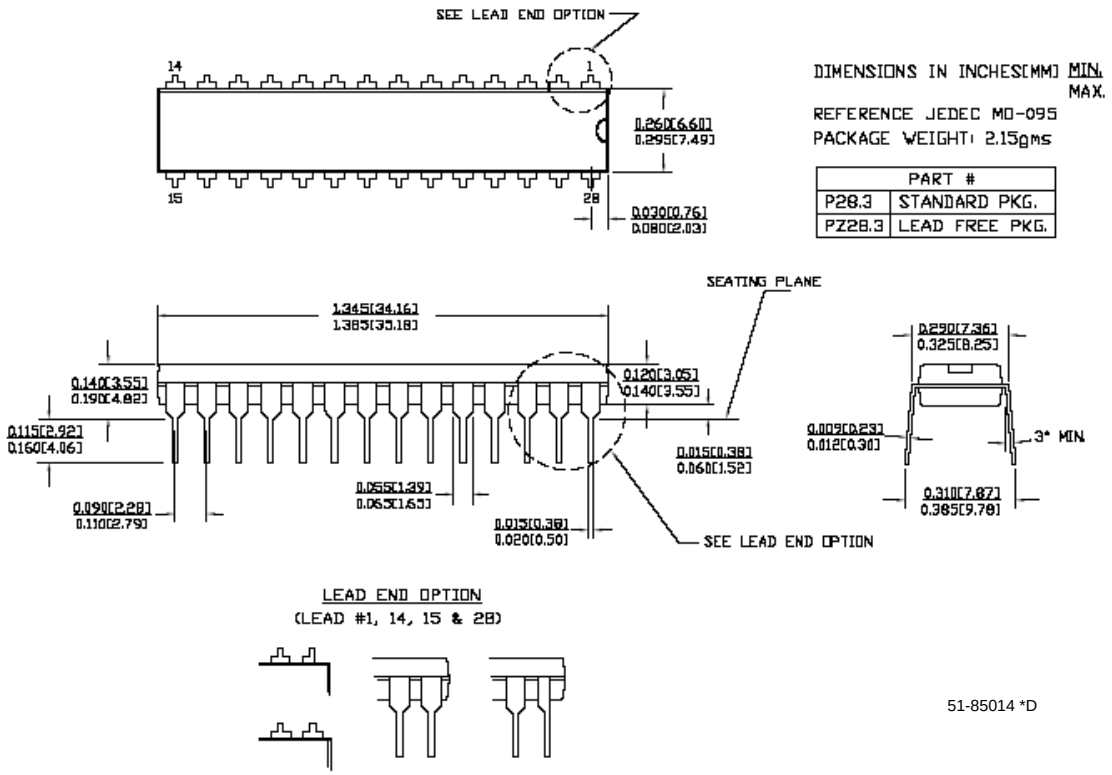

Figure 4-4. 28-Lead (300-Mil) Molded DIP

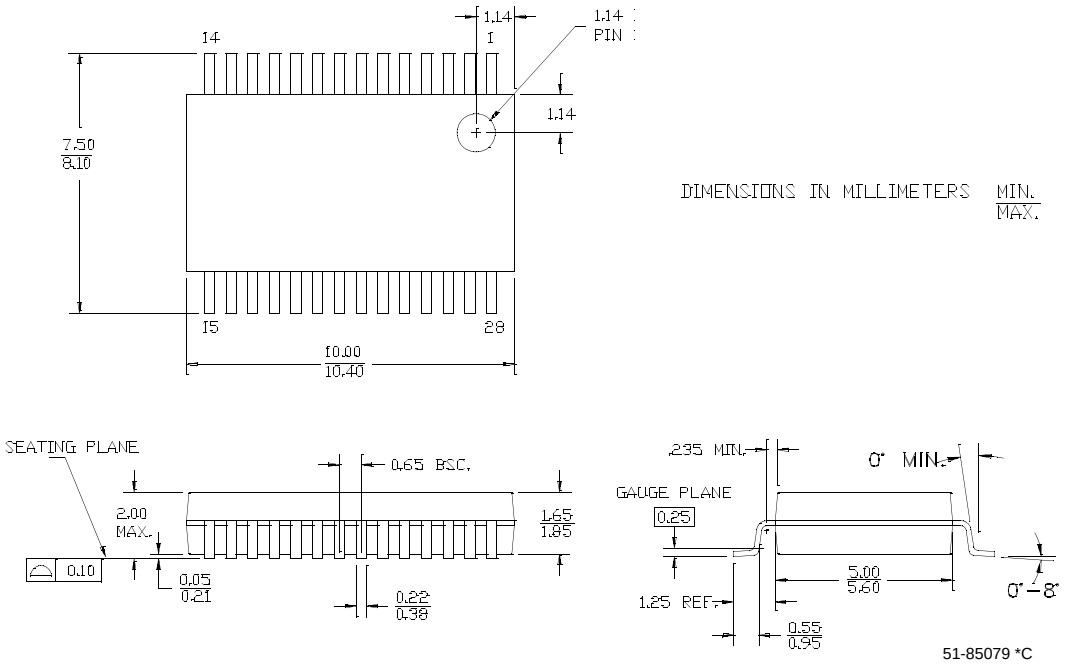

Figure 4-5. 28-Lead (210-Mil) SSOP

[+] Feedback

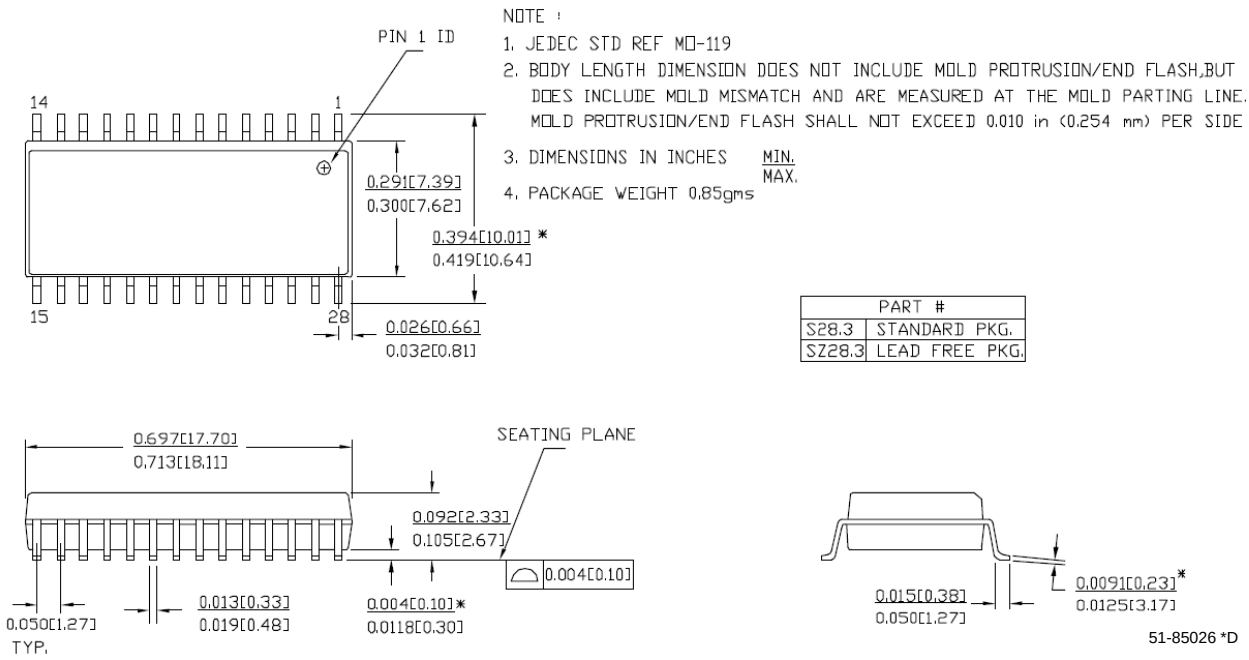

Figure 4-6. 28-Lead (300-Mil) Molded SOIC

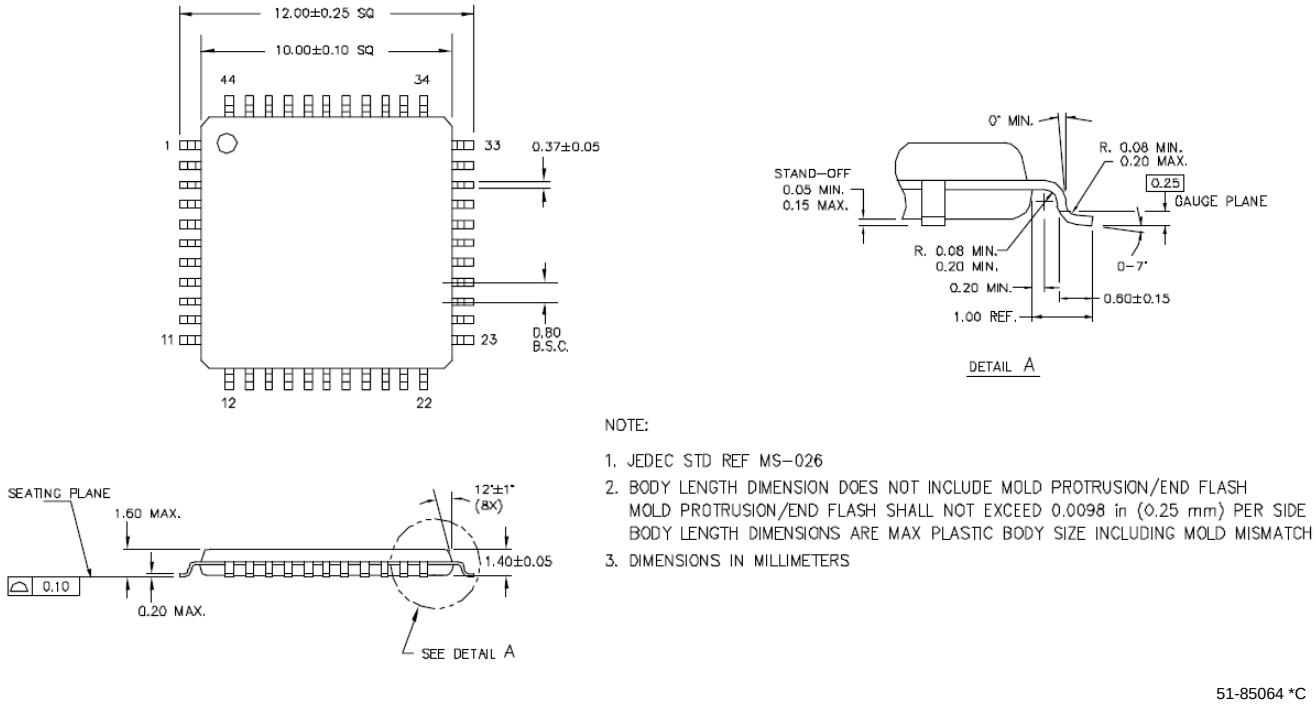

Figure 4-7. 44-Lead TQFP

[+] Feedback

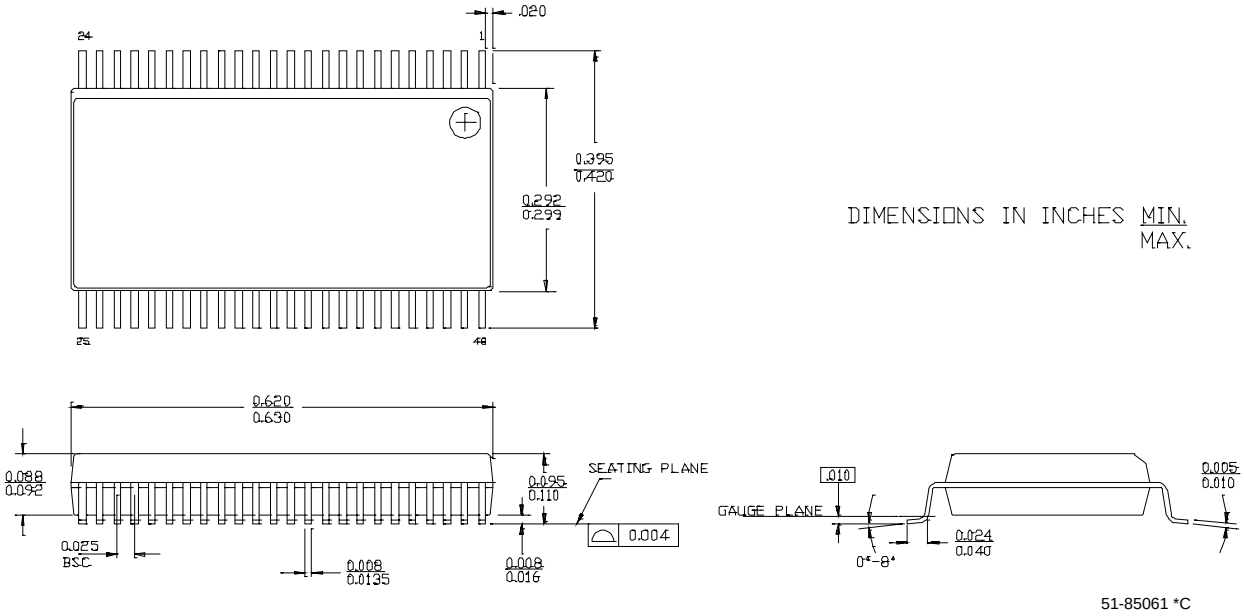

Figure 4-8. 48-Lead (300-Mil) SSOP

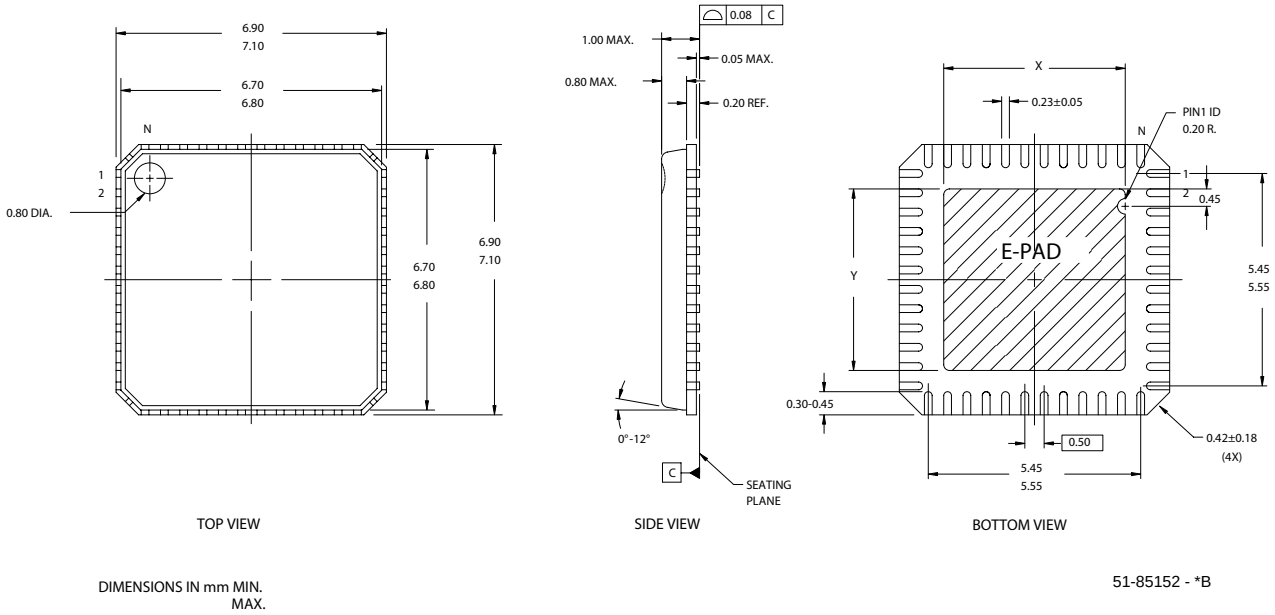

Figure 4-9. 48-Lead (7x7 mm) QFN

Important Note For information on the preferred dimensions for mounting QFN packages, see the following Application Note at http://www.amkor.com/products/notes_papers/MLFAppNote.pdf.

[+] Feedback

4.2 Thermal Impedances

Table 4-1. Thermal Impedances per Package

Package	Typical θ_{JA} *
8 PDIP	120 °C/W
20 SSOP	116 °C/W
20 SOIC	79 °C/W
28 PDIP	67 °C/W
28 SSOP	95 °C/W
28 SOIC	68 °C/W
44 TQFP	61 °C/W
48 SSOP	69 °C/W
48 QFN	18 °C/W

* $T_J = T_A + POWER \times \theta_{JA}$

4.3 Capacitance on Crystal Pins

Table 4-2: Typical Package Capacitance on Crystal Pins

Package	Package Capacitance
8 PDIP	2.8 pF
20 SSOP	2.6 pF
20 SOIC	2.5 pF
28 PDIP	3.5 pF
28 SSOP	2.8 pF
28 SOIC	2.7 pF
44 TQFP	2.6 pF
48 SSOP	3.3 pF
48 QFN	2.3 pF

4.4 Solder Reflow Peak Temperature

Following is the minimum solder reflow peak temperature to achieve good solderability.

Table 4-3. Solder Reflow Peak Temperature

Package	Silicon A*		Silicon B*	
	Minimum Peak Temperature**	Maximum Peak Temperature	Minimum Peak Temperature*	Maximum Peak Temperature
8 PDIP	220°C	240°C	240°C	260°C
20 SSOP	220°C	240°C	240°C	260°C
20 SOIC	220°C	240°C	220°C	260°C
28 PDIP	220°C	240°C	240°C	260°C
28 SSOP	220°C	240°C	240°C	260°C
28 SOIC	220°C	240°C	220°C	260°C
44 TQFP	220°C	240°C	220°C	260°C
48 SSOP	220°C	240°C	220°C	260°C
48 QFN	220°C	240°C	240°C	260°C

*Refer to the Ordering Information chapter on page 48.

**Higher temperatures may be required based on the solder melting point. Typical temperatures for solder are 220 ± 5°C with Sn-Pb or 245 ± 5°C with Sn-Ag-Cu paste. Refer to the solder manufacturer specifications.

[+] Feedback

5. Development Tool Selection

This chapter presents the development tools available for all current PSoC device families including the CY8C27x43 family.

5.1 Software

5.1.1 PSoC Designer™

At the core of the PSoC development software suite is PSoC Designer. Utilized by thousands of PSoC developers, this robust software has been facilitating PSoC designs for half a decade. PSoC Designer is available free of charge at http://www.cypress.com under DESIGN RESOURCES >> Software and Drivers.

5.1.2 PSoC Express™

As the newest addition to the PSoC development software suite, PSoC Express is the first visual embedded system design tool that allows a user to create an entire PSoC project and generate a schematic, BOM, and data sheet without writing a single line of code. Users work directly with application objects such as LEDs, switches, sensors, and fans. PSoC Express is available free of charge at http://www.cypress.com/psocexpress.

5.1.3 PSoC Programmer

Flexible enough to be used on the bench in development, yet suitable for factory programming, PSoC Programmer works either as a standalone programming application or it can operate directly from PSoC Designer or PSoC Express. PSoC Programmer software is compatible with both PSoC ICE-Cube In-Circuit Emulator and PSoC MiniProg. PSoC programmer is available free ofcharge at http://www.cypress.com/psocprogrammer.

5.1.4 CY3202-C iMAGEcraft C Compiler

CY3202 is the optional upgrade to PSoC Designer that enables the iMAGEcraft C compiler. It can be purchased from the Cypress Online Store. At http://www.cypress.com, click the Online Store shopping cart icon at the bottom of the web page, and click *PSoC (Programmable System-on-Chip)* to view a current list of available items.

5.2 Development Kits

All development kits can be purchased from the Cypress Online Store.

5.2.1 CY3215-DK Basic Development Kit

The CY3215-DK is for prototyping and development with PSoC Designer. This kit supports in-circuit emulation and the software interface allows users to run, halt, and single step the processor and view the content of specific memory locations. Advance emulation features also supported through PSoC Designer. The kit includes:

- **PSoC Designer Software CD**
- **ICE-Cube In-Circuit Emulator**
- **ICE Flex-Pod for CY8C29x66 Family**
- **Cat-5 Adapter**
- **Mini-Eval Programming Board**
- **110 ~ 240V Power Supply, Euro-Plug Adapter**
- **iMAGEcraft C Compiler (Registration Required)**
- **ISSP Cable**
- **USB 2.0 Cable and Blue Cat-5 Cable**
- **2 CY8C29466-24PXI 28-PDIP Chip Samples**

[+] Feedback

5.2.2 CY3210-ExpressDK PSoC Express Development Kit

The CY3210-ExpressDK is for advanced prototyping and development with PSoC Express (may be used with ICE-Cube In-Circuit Emulator). It provides access to I^2C buses, voltage reference, switches, upgradeable modules and more. The kit includes:

- **PSoC Express Software CD**
- **Express Development Board**
- **4 Fan Modules**
- **2 Proto Modules**
- **MiniProg In-System Serial Programmer**
- **MiniEval PCB Evaluation Board**
- **Jumper Wire Kit**
- **USB 2.0 Cable**
- **Serial Cable (DB9)**
- **110 ~ 240V Power Supply, Euro-Plug Adapter**
- **2 CY8C24423A-24PXI 28-PDIP Chip Samples**
- **2 CY8C27443-24PXI 28-PDIP Chip Samples**
- **2 CY8C29466-24PXI 28-PDIP Chip Samples**

5.3 Evaluation Tools

All evaluation tools can be purchased from the Cypress Online Store.

5.3.1 CY3210-MiniProg1

The CY3210-MiniProg1 kit allows a user to program PSoC devices via the MiniProg1 programming unit. The MiniProg is a small, compact prototyping programmer that connects to the PC via a provided USB 2.0 cable. The kit includes:

- **MiniProg Programming Unit**
- **MiniEval Socket Programming and Evaluation Board**
- **28-Pin CY8C29466-24PXI PDIP PSoC Device Sample**
- **28-Pin CY8C27443-24PXI PDIP PSoC Device Sample**
- **PSoC Designer Software CD**
- **Getting Started Guide**
- **USB 2.0 Cable**

5.3.2 CY3210-PSoCEval1

The CY3210-PSoCEval1 kit features an evaluation board and the MiniProg1 programming unit. The evaluation board includes an LCD module, potentiometer, LEDs, and plenty of breadboarding space to meet all of your evaluation needs. The kit includes:

- **Evaluation Board with LCD Module**
- **MiniProg Programming Unit**
- **28-Pin CY8C29466-24PXI PDIP PSoC Device Sample (2)**
- **PSoC Designer Software CD**
- **Getting Started Guide**
- **USB 2.0 Cable**

5.3.3 CY3214-PSoCEvalUSB

The CY3214-PSoCEvalUSB evaluation kit features a development board for the CY8C24794-24LFXI PSoC device. Special features of the board include both USB and capacitive sensing development and debugging support. This evaluation board also includes an LCD module, potentiometer, LEDs, an enunciator and plenty of bread boarding space to meet all of your evaluation needs. The kit includes:

- **PSoCEvalUSB Board**
- **LCD Module**
- **MIniProg Programming Unit**
- **Mini USB Cable**
- **PSoC Designer and Example Projects CD**
- **Getting Started Guide**
- **Wire Pack**

5.4 Device Programmers

All device programmers can be purchased from the Cypress Online Store.

5.4.1 CY3216 Modular Programmer

The CY3216 Modular Programmer kit features a modular programmer and the MiniProg1 programming unit. The modular programmer includes three programming module cards and supports multiple Cypress products. The kit includes:

- **Modular Programmer Base**
- **3 Programming Module Cards**
- **MiniProg Programming Unit**
- **PSoC Designer Software CD**
- **Getting Started Guide**
- **USB 2.0 Cable**

5.4.2 CY3207ISSP In-System Serial Programmer (ISSP)

The CY3207ISSP is a production programmer. It includes protection circuitry and an industrial case that is more robust than the MiniProg in a production-programming environment.
Note: CY3207ISSP needs special software and is not compatible with PSoC Programmer. The kit includes:

- **CY3207 Programmer Unit**
- **PSoC ISSP Software CD**
- **110 ~ 240V Power Supply, Euro-Plug Adapter**
- **USB 2.0 Cable**

[+] Feedback

5.5 Accessories (Emulation and Programming)

Table 5-1. Emulation and Programming Accessories

Part #	Pin Package	Flex-Pod Kit[a]	Foot Kit[b]	Adapter[c]
CY8C27143 -24PXI	8 PDIP	CY3250-27XXX	CY3250-8PDIP-FK	Adapters can be found at http://www.emulation.com.
CY8C27243 -24PVXI	20 SSOP	CY3250-27XXX	CY3250-20SSOP-FK	
CY8C27243 -24SXI	20 SOIC	CY3250-27XXX	CY3250-20SOIC-FK	
CY8C27443 -24PXI	28 PDIP	CY3250-27XXX	CY3250-28PDIP-FK	
CY8C27443 -24PVXI	28 SSOP	CY3250-27XXX	CY3250-28SSOP-FK	
CY8C27443 -24SXI	28 SOIC	CY3250-27XXX	CY3250-28SOIC-FK	
CY8C27543 -24AXI	44 TQFP	CY3250-27XXX	CY3250-44TQFP-FK	
CY8C27643 -24PVXI	48 SSOP	CY3250-27XXX	CY3250-48SSOP-FK	
CY8C27643 -24LFXI	48 QFN	CY3250-27XXXQFN	CY3250-48QFN-FK	

a. Flex-Pod kit includes a practice flex-pod and a practice PCB, in addition to two flex-pods.
b. Foot kit includes surface mount feet that can be soldered to the target PCB.
c. Programming adapter converts non-DIP package to DIP footprint. Specific details and ordering information for each of the adapters can be found at http://www.emulation.com.

5.6 3rd-Party Tools

Several tools have been specially designed by the following 3rd-party vendors to accompany PSoC devices during development and production. Specific details for each of these tools can be found at http://www.cypress.com under DESIGN RESOURCES >> Evaluation Boards.

5.7 Build a PSoC Emulator into Your Board

For details on how to emulate your circuit before going to volume production using an on-chip debug (OCD) non-production PSoC device, see Application Note “Debugging - Build a PSoC Emulator into Your Board - AN2323” at http://www.cypress.com/an2323.

[+] Feedback

6. Ordering Information

The following table lists the CY8C27x43 PSoC device's key package features and ordering codes.

Table 6-1. CY8C27x43 PSoC Device Key Features and Ordering Information

Package	Ordering Code	Flash (Bytes)	RAM (Bytes)	Switch Mode Pump	Temperature Range	Digital Blocks (Rows of 4)	Analog Blocks (Columns of 3)	Digital IO Pins	Analog Inputs	Analog Outputs	XRES Pin
CY8C27x43 Silicon B – These parts are lead free and offer the following improvements. The DEC_CR1 register selections are enhanced to allow any digital block to be the decimator clock source, the ECO EX and ECO EXW bits in the CPU_SCR1 register are readable, and the accuracy of the analog reference is enhanced (see the Electrical Specifications chapter). All silicon A errata are fixed in silicon B.											
8 Pin (300 Mil) DIP	CY8C27143-24PXI	16K	256	No	-40C to +85C	8	12	6	4	4	No
20 Pin (210 Mil) SSOP	CY8C27243-24PVXI	16K	256	Yes	-40C to +85C	8	12	16	8	4	Yes
20 Pin (210 Mil) SSOP (Tape and Reel)	CY8C27243-24PVXIT	16K	256	Yes	-40C to +85C	8	12	16	8	4	Yes
20 Pin (300 Mil) SOIC	CY8C27243-24SXI	16K	256	Yes	-40C to +85C	8	12	16	8	4	Yes
20 Pin 300 Mil) SOIC (Tape and Reel)	CY8C27243-24SXIT	16K	256	Yes	-40C to +85C	8	12	16	8	4	Yes
28 Pin (300 Mil) DIP	CY8C27443-24PXI	16K	256	Yes	-40C to +85C	8	12	24	12	4	Yes
28 Pin (210 Mil) SSOP	CY8C27443-24PVXI	16K	256	Yes	-40C to +85C	8	12	24	12	4	Yes
28 Pin (210 Mil) SSOP (Tape and Reel)	CY8C27443-24PVXIT	16K	256	Yes	-40C to +85C	8	12	24	12	4	Yes
28 Pin (300 Mil) SOIC	CY8C27443-24SXI	16K	256	Yes	-40C to +85C	8	12	24	12	4	Yes
28 Pin (300 Mil) SOIC (Tape and Reel)	CY8C27443-24SXIT	16K	256	Yes	-40C to +85C	8	12	24	12	4	Yes
44 Pin TQFP	CY8C27543-24AXI	16K	256	Yes	-40C to +85C	8	12	40	12	4	Yes
44 Pin TQFP (Tape and Reel)	CY8C27543-24AXIT	16K	256	Yes	-40C to +85C	8	12	40	12	4	Yes
48 Pin (300 Mil) SSOP	CY8C27643-24PVXI	16K	256	Yes	-40C to +85C	8	12	44	12	4	Yes
48 Pin (300 Mil) SSOP (Tape and Reel)	CY8C27643-24PVXIT	16K	256	Yes	-40C to +85C	8	12	44	12	4	Yes
48 Pin (7x7) QFN	CY8C27643-24LFXI	16K	256	Yes	-40C to +85C	8	12	44	12	4	Yes
48 Pin (7x7) QFN (Tape and Reel)	CY8C27643-24LFXIT	16K	256	Yes	-40C to +85C	8	12	44	12	4	Yes
56 Pin OCD SSOP	CY8C27002-24PVXI[a]	16K	256	Yes	-40C to +85C	8	12	44	14	4	Yes
CY8C27x43 Silicon A – Silicon A is not recommended for new designs.											
8 Pin (300 Mil) DIP	CY8C27143-24PI	16K	256	No	-40C to +85C	8	12	6	4	4	No
20 Pin (210 Mil) SSOP	CY8C27243-24PVI	16K	256	Yes	-40C to +85C	8	12	16	8	4	Yes
20 Pin (210 Mil) SSOP (Tape and Reel)	CY8C27243-24PVIT	16K	256	Yes	-40C to +85C	8	12	16	8	4	Yes
20 Pin (300 Mil) SOIC	CY8C27243-24SI	16K	256	Yes	-40C to +85C	8	12	16	8	4	Yes
20 Pin 300 Mil) SOIC (Tape and Reel)	CY8C27243-24SIT	16K	256	Yes	-40C to +85C	8	12	16	8	4	Yes
28 Pin (300 Mil) DIP	CY8C27443-24PI	16K	256	Yes	-40C to +85C	8	12	24	12	4	Yes

[+] Feedback

Table 6-1. CY8C27x43 PSoC Device Key Features and Ordering Information *(continued)*

Package	Ordering Code	Flash (Bytes)	RAM (Bytes)	Switch Mode Pump	Temperature Range	Digital Blocks (Rows of 4)	Analog Blocks (Columns of 3)	Digital IO Pins	Analog Inputs	Analog Outputs	XRES Pin
28 Pin (210 Mil) SSOP	CY8C27443-24PVI	16K	256	Yes	-40C to +85C	8	12	24	12	4	Yes
28 Pin (210 Mil) SSOP (Tape and Reel)	CY8C27443-24PVIT	16K	256	Yes	-40C to +85C	8	12	24	12	4	Yes
28 Pin (300 Mil) SOIC	CY8C27443-24SI	16K	256	Yes	-40C to +85C	8	12	24	12	4	Yes
28 Pin (300 Mil) SOIC (Tape and Reel)	CY8C27443-24SIT	16K	256	Yes	-40C to +85C	8	12	24	12	4	Yes
44 Pin TQFP	CY8C27543-24AI	16K	256	Yes	-40C to +85C	8	12	40	12	4	Yes
44 Pin TQFP (Tape and Reel)	CY8C27543-24AIT	16K	256	Yes	-40C to +85C	8	12	40	12	4	Yes
48 Pin (300 Mil) SSOP	CY8C27643-24PVI	16K	256	Yes	-40C to +85C	8	12	44	12	4	Yes
48 Pin (300 Mil) SSOP (Tape and Reel)	CY8C27643-24PVIT	16K	256	Yes	-40C to +85C	8	12	44	12	4	Yes
48 Pin (7x7) MLF	CY8C27643-24LFI	16K	256	Yes	-40C to +85C	8	12	44	12	4	Yes
48 Pin (7x7) MLF (Tape and Reel)	CY8C27643-24LFIT	16K	256	Yes	-40C to +85C	8	12	44	12	4	Yes

a. This part may be used for in-circuit debugging. It is NOT available for production

6.1 Ordering Code Definitions

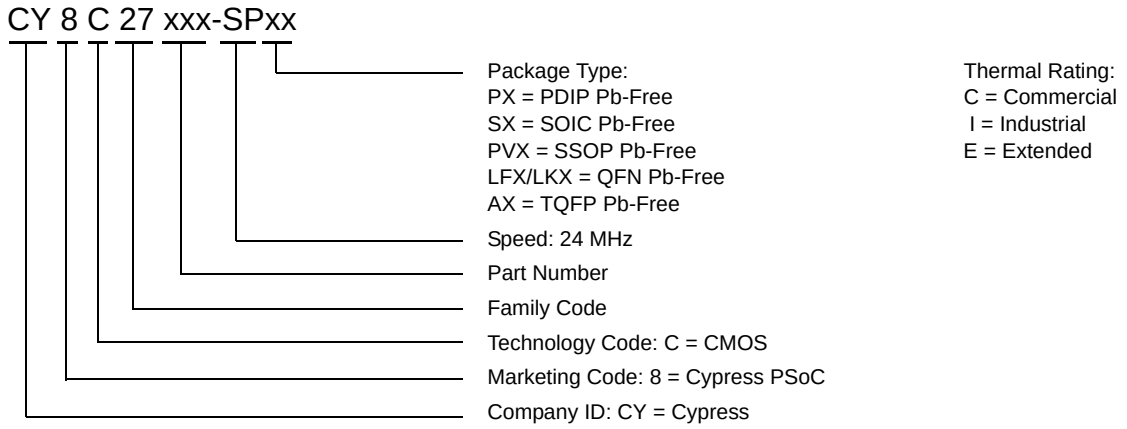

[+] Feedback

7. Sales and Service Information

Cypress Semiconductor
198 Champion Court
San Jose, CA 95134
408.943.2600

Web Sites: Company Information – http://www.cypress.com
Sales – http://www.cypress.com/aboutus/sales_locations.cfm
Technical Support – http://www.cypress.com/support/login.cfm

7.1 Revision History

Table 7-1. CY8C27x43 Data Sheet Revision History

Document Title: CY8C27143, CY8C27243, CY8C27443, CY8C27543, and CY8C27643 PSoC Mixed-Signal Array Final Data Sheet
Document Number: 38-12012

Revision	ECN #	Issue Date	Origin of Change	Description of Change
**	127087	7/01/2003	New Silicon.	New document (Revision **).
*A	128780	7/29/2003	Engineering and NWJ.	New electrical spec additions, fix of Core Architecture links, corrections to some text, tables, drawings, and format.
*B	128992	8/14/2003	NWJ	Interrupt controller table fixed, refinements to Electrical Spec section and Register chapter.
*C	129283	8/28/2003	NWJ	Significant changes to the Electrical Specifications section.
*D	129442	9/09/2003	NWJ	Changes made to Electrical Spec section. Added 20/28-Lead SOIC packages and pinouts.
*E	130129	10/13/2003	NWJ	Revised document for Silicon Revision A.
*F	130651	10/28/2003	NWJ	Refinements to Electrical Specification section and I2C chapter.
*G	131298	11/18/2003	NWJ	Revisions to GDI, RDI, and Digital Block chapters. Revisions to AC Digital Block Spec and miscellaneous register changes.
*H	229416	See ECN	SFV	New data sheet format and organization. Reference the *PSoC Mixed-Signal Array Technical Reference Manual* for additional information. Title change.
*I	247529	See ECN	SFV	Added Silicon B information to this data sheet.
*J	355555	See ECN	HMT	Add DS standards, update device table, swap 48-pin SSOP 45 and 46, add Reflow Peak Temp. table. Add new color and logo. Re-add pinout ISSP notation. Add URL to preferred dimensions for mounting MLF packages. Update Transmitter and Receiver AC Digital Block Electrical Specifications.
*K	523233	See ECN	HMT	Add Low Power Comparator (LPC) AC/DC electrical spec. tables. Add new Dev. Tool section. Add CY8C20x34 to PSoC Device Characteristics table. Add OCD pinout and package diagram. Add ISSP note to pinout tables. Update package diagram revisions. Update typical and recommended Storage Temperature per industrial specs. Update CY branding and QFN convention. Update copyright and trademarks.

Distribution: External Public **Posting**: None

[+] Feedback

7.2 Copyrights and Code Protection

Copyrights

© Cypress Semiconductor Corp. 2002-2006. All rights reserved. PSoC Designer™, Programmable System-on-Chip™, and PSoC Express are trademarks and PSoC® is a registered trademark of Cypress Semiconductor Corp. All other trademarks or registered trademarks referenced herein are property of the respective corporations.

The information contained herein is subject to change without notice. Cypress Semiconductor assumes no responsibility for the use of any circuitry other than circuitry embodied in a Cypress Semiconductor product. Nor does it convey or imply any license under patent or other rights. Cypress Semiconductor does not authorize its products for use as critical components in life-support systems where a malfunction or failure may reasonably be expected to result in significant injury to the user. The inclusion of Cypress Semiconductor products in life-support systems application implies that the manufacturer assumes all risk of such use and in doing so indemnifies Cypress Semiconductor against all charges. Cypress Semiconductor products are not warranted nor intended to be used for medical, life-support, life-saving, critical control or safety applications, unless pursuant to an express written agreement with Cypress Semiconductor.

Flash Code Protection

Note the following details of the Flash code protection features on Cypress Semiconductor PSoC devices.

Cypress Semiconductor products meet the specifications contained in their particular data sheets. Cypress Semiconductor believes that its family of products is one of the most secure families of its kind on the market today, regardless of how they are used. There may be methods, unknown to Cypress Semiconductor, that can breach the code protection features. Any of these methods, to our knowledge, would be dishonest and possibly illegal. Neither Cypress Semiconductor nor any other semiconductor manufacturer can guarantee the security of their code. Code protection does not mean that we are guaranteeing the product as "unbreakable."

Cypress Semiconductor is willing to work with the customer who is concerned about the integrity of their code. Code protection is constantly evolving. We at Cypress Semiconductor are committed to continuously improving the code protection features of our products.

Cypress Semiconductor is willing to work with the customer who is concerned about the integrity of their code. Code protection is constantly evolving. We at Cypress Semiconductor are committed to continuously improving the code protection features of our products.

[+] Feedback

Компания «ЭлектроПласт» предлагает заключение долгосрочных отношений при поставках импортных электронных компонентов на взаимовыгодных условиях!

Наши преимущества:

- Оперативные поставки широкого спектра электронных компонентов отечественного и импортного производства напрямую от производителей и с крупнейших мировых складов;
- Поставка более 17-ти миллионов наименований электронных компонентов;
- Поставка сложных, дефицитных, либо снятых с производства позиций;
- Оперативные сроки поставки под заказ (от 5 рабочих дней);
- Экспресс доставка в любую точку России;
- Техническая поддержка проекта, помощь в подборе аналогов, поставка прототипов;
- Система менеджмента качества сертифицирована по Международному стандарту ISO 9001;
- Лицензия ФСБ на осуществление работ с использованием сведений, составляющих государственную тайну;
- Поставка специализированных компонентов (Xilinx, Altera, Analog Devices, Intersil, Interpoint, Microsemi, Aeroflex, Peregrine, Syfer, Eurofarad, Texas Instrument, Miteq, Cobham, E2V, MA-COM, Hittite, Mini-Circuits,General Dynamics и др.);

Помимо этого, одним из направлений компании «ЭлектроПласт» является направление «Источники питания». Мы предлагаем Вам помощь Конструкторского отдела:

- Подбор оптимального решения, техническое обоснование при выборе компонента;
- Подбор аналогов;
- Консультации по применению компонента;
- Поставка образцов и прототипов;
- Техническая поддержка проекта;
- Защита от снятия компонента с производства.

Как с нами связаться

Телефон: 8 (812) 309 58 32 (многоканальный)
Факс: 8 (812) 320-02-42
Электронная почта: org@eplast1.ru
Адрес: 198099, г. Санкт-Петербург, ул. Калинина, дом 2, корпус 4, литера А.