48Vdc Input, 3.3Vdc@40A Output Quarter-brick DC-DC Converter AGQ200B-48S3V3

Description

The AGQ200B-48S3V3 is a single output DC-DC converter with standard quarter-brick outline and pin configuration. It delivers up to 40A output current with 3.3V output voltage. Above 92% efficiency and excellent thermal performance make it an ideal choice to supply power in telecom and datacom. It can work under -40°C ~ +85°C.

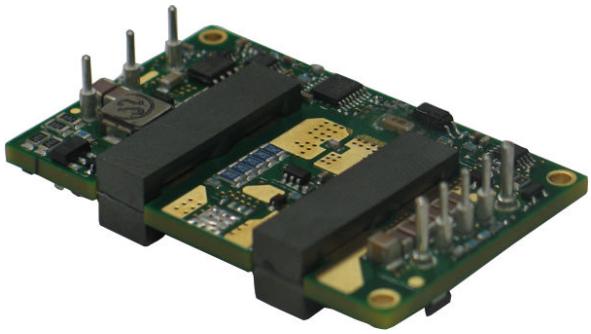

Operational Features

- Delivering up to 40A output current
- Ultra-high efficiency 92% typ. at full load
- Wide input range: 36V ~ 75V
- Excellent thermal performance
- No minimum load requirement
- Fixed frequency operation
- RoHS 6, RoHS 5 compliant

Control Features

- Remote control function
- Remote output sense
- Trim function: -20% ~ +10%

Protection Features

- Input under voltage lockout
- Output over current protection
- Output over voltage protection
- Over temperature protection

Mechanical Features

- Industry standard quarter-brick pin-out outline
- Open frame or baseplate optional
- Pin length option: 3.8mm, 4.8mm, 5.8mm

Safety & EMC

- Meets safety standards UL 60950-1, CSA-C22.2 NO. 60950-1, IEC/EN 60950-1 and GB4943
- Approved by UL and TUV
- Meets 2006/95/EEC and 93/68/EEC directives which facilitates CE marking in user's end product
- Meets conducted emission's requirements of EN55022 Class A with external filter

Electrical Characteristics

Full operating ambient temperature range is -40°C to +85°C.
Specifications are subject to change without notice.

Parameter		Min.	Typ.	Max.	Unit	Notes & Conditions
Absolute max. ratings						
Input Voltage	Non-operating			100	V	100ms
	Operating			80	V	Continuous
Operating temperature		-40		85	°C	
Storage temperature		-55		125	°C	
Voltage at remote ON/OFF pin		-0.7		12	V	
Input characteristics						
Operating input voltage range		36	48	75	V	
Input under-voltage lockout	Turn-on voltage threshold	31	34	36	V	
	Turn-off voltage threshold	30	33	35	V	
	Lockout voltage hysteresis	1		3	V	
Max. input current				4.5	A	$36V_{in}$, full load
No-load input current			0.07	0.1	A	
Standby Input current			0.01	0.1	A	Remote OFF
Inrush current transient rating			0.5	1	A^2s	
Input reflected ripple current			13	20	mA	Through 12μH inductor, Figure 4
Input voltage ripple rejection		40	75		dB	120Hz
Recommended input fuse				15	A	Fast blow external fuse recommended; Figure 11
Input filter component values (C\L)			5.4\3.3		μF\μH	Internal values
Recommended external input capacitance			100		μF	Low ESR capacitor recommended; Figure 11
Output characteristics						
Output voltage set point (standard option)		3.25	3.30	3.35	V	$48V_{in}$, full load
Output voltage line regulation			0.5	5	mV	
Output voltage load regulation			0.4	10	mV	
Output voltage temperature regulation				0.02	%/°C	

Parameter		Min.	Typ.	Max.	Unit	Notes & Conditions
Total output voltage range		3.21	3.30	3.39	V	
Output voltage ripple and noise			70	100	mVpp	20MHz bandwidth; Figure 3
Operating output current range		0		40	A	Hiccup: auto-restart when over-current condition is removed
Output DC current-limit inception		44		56	A	
Output capacitance		470	470	10000	μF	High frequency and low ESR are recommended
Dynamic characteristics						
Dynamic response	25% ~ 50% ~ 25% $I_{o,max}$, 0.1A/μs		60		mV	Figure 5
	Settling time		100		μs	Recovery to within 1% $V_{o,nom}$
	25% ~ 50% ~ 25% $I_{o,max}$, 1A/μs		205		mV	Figure 6
	Settling time		340		μs	Recovery to within 1% $V_{o,nom}$
	0% ~ 50% ~ 0% $I_{o,max}$, 0.1A/μs		90		mV	
	10% ~100%~10% $I_{o,max}$, 0.1A/μs		95		mV	
Turn-on transient	Rise time		5	30	ms	Full load, Figures 9 & 10
	Turn-on delay time		3	10	ms	
	Output voltage overshoot			5	$\%V_o$	
Efficiency						
100% load			92.0		%	Figure 1
50% load			91.5		%	Figure 1

Electrical Characteristics (Continued)

Parameter	Min.	Typ.	Max.	Unit	Notes & Conditions
Isolation characteristics					
Isolation voltage (conditions: 1mA for 60s, slew rate of 1500V/10s)		2250		V	Basic insulation, pollution degree 2, pollution degree 2, input to output

Parameter		Min.	Typ.	Max.	Unit	Notes & Conditions
Feature characteristics						
Switching frequency			280		kHz	Regulation stage and Isolation stage
Remote ON/OFF control (positive logic)	Off-state voltage	-0.7		1.2	V	See Figure 12
	On-state voltage	3.5		12	V	
Remote ON/OFF control (negative logic)	Off-state voltage	3.5		12	V	
	On-state voltage	-0.7		1.2	V	
Output voltage trim range		2.64		3.63	V	See *Trim Characteristics* of *Application Note*
Output voltage remote sense range				0.5	V	
Output over-voltage protection		120		140	$\%V_{o,nom}$	Hiccup: auto-restart when over-voltage condition is removed
Over-temperature shutdown		110		135	°C	Auto recovery; Test point: see Figure 18
Over-temperature hysteresis		5			°C	
Reliability characteristics						
Calculated MTBF (telcordia)			2		10^6h	Telcordia SR-332-2006; 80% load, 300LFM, 40°C T_a

Qualification Testing

Parameter	Unit (pcs)	Test condition
Halt test	4 ~ 5	$T_{a,min}$-10°C to $T_{a,max}$+10°C, 5°C step, V_{in}=min to max, 0 ~ 105% load
Vibration	3	Frequency range: 5Hz ~ 20Hz, 20Hz ~ 200Hz, A.S.D: 1.0m^2/s^3, -3db/oct, axes of vibration: X/Y/Z Time: 30min/axis
Mechanical shock	3	30g, 6ms, 3axes, 6directions, 3time/direction
Thermal shock	3	-40°C to 100°C, unit temperature 20cycles
Thermal cycling	3	-40°C to 55°C, temperature change rate: 1°C/min, cycles: 2cycles
Humidity	3	40°C, 95%RH, 48h
Solder ability	15	IPC J-STD-002C-2007

Characteristic Curves

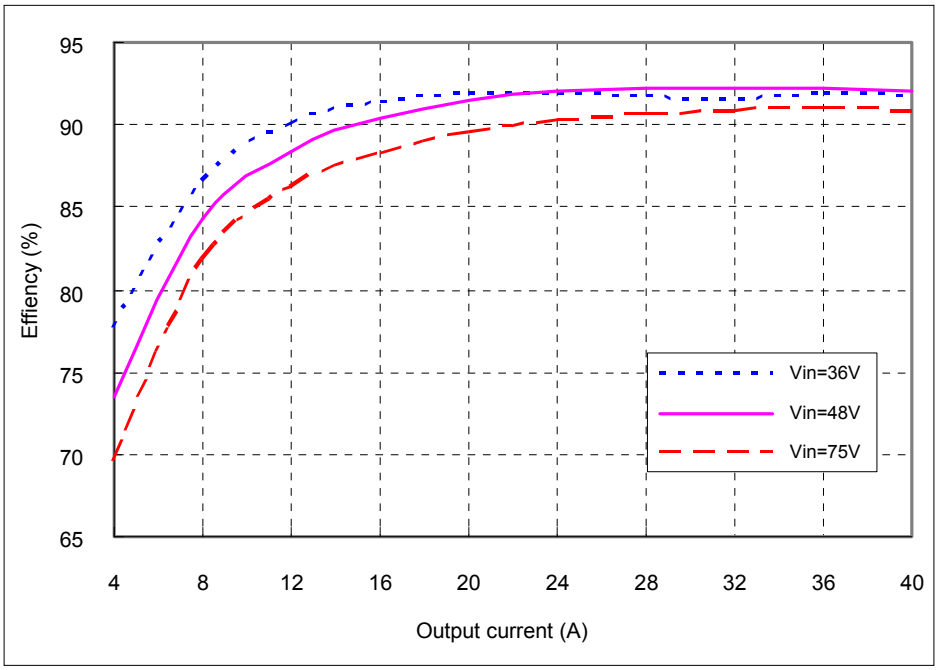

Figure 1 Efficiency vs. output current, T_a=25°C, V_o=3.3V

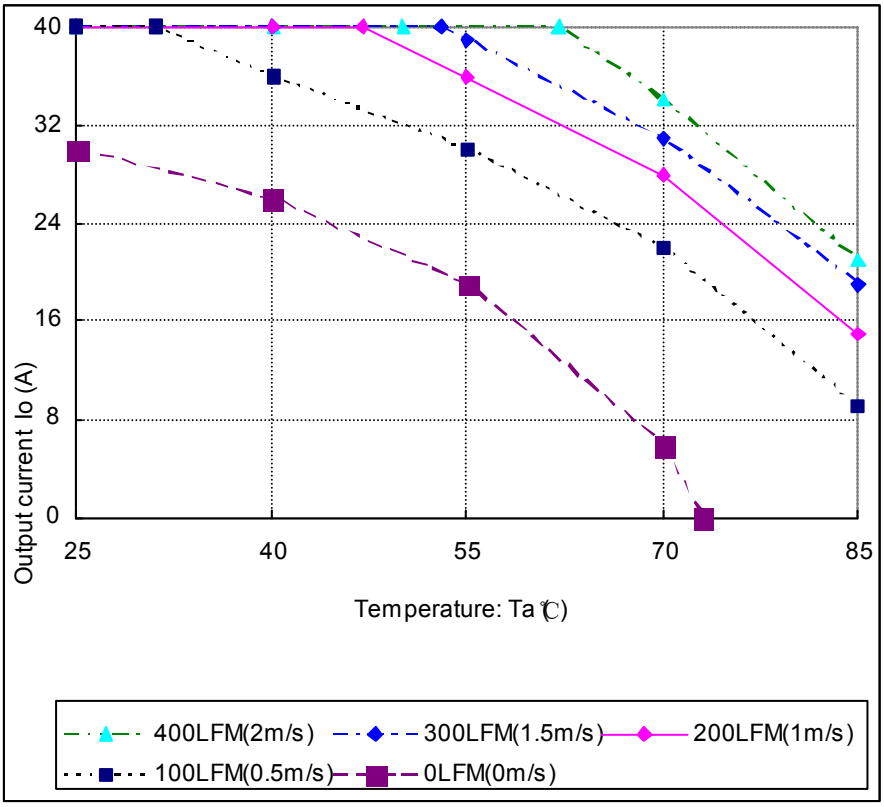

Figure 2 Output power derating, 48V_{in}, air flowing across the converter from pin 1 to pin 3

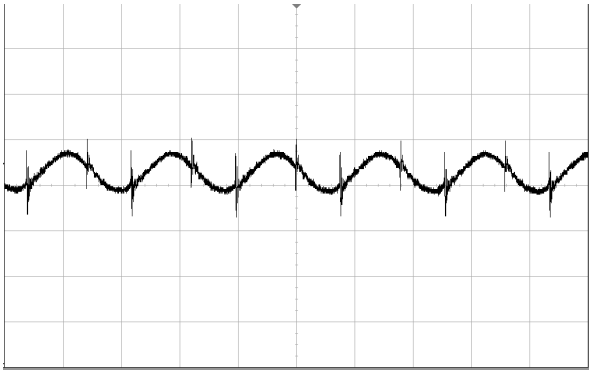

Figure 3 Output ripple & noise (2μs/div, 10mV/div), see Figure 15 for test configuration

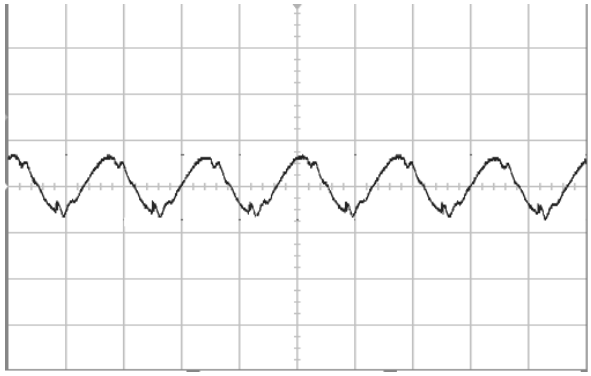

Figure 4 Input reflected ripple current (2μs/div, 5mA/div), see Figure 15 for test configuration

Figure 5 Dynamic response for 25% load step (25% ~ 50% ~ 25%) and 0.1A/μs slew rate, (1ms/div), see Figure 11 for test configuration; CH1-output voltage (50mV/div); CH2-output current (10A/div)

Figure 6 Dynamic response for 25% load step (50% ~ 75% ~ 50%) and 1A/μs slew rate, (1ms/div), see Figure 11 for test configuration; CH1-output voltage (200mV/div); CH2-output current (10A/div)

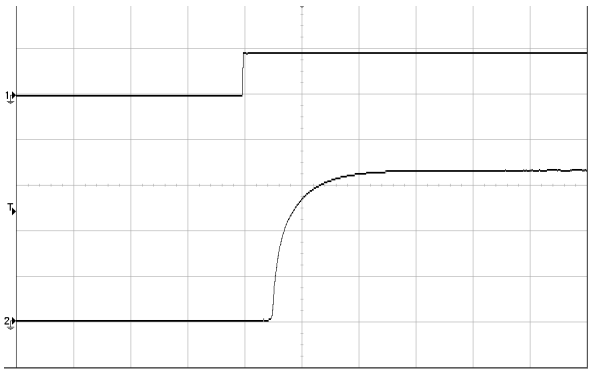

Figure 7 Output voltage startup by power on, (5ms/div), see Figure 11 for test configuration; CH1-input voltage (50V/div); CH2-output voltage (1V/div)

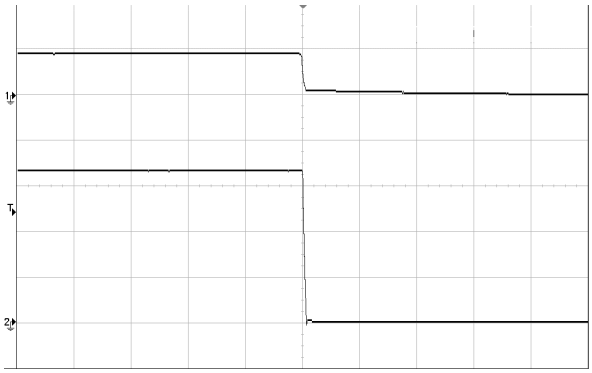

Figure 8 Output voltage shut down by power off, (5ms/div), see Figure 11 for test configuration; CH1-input voltage (50V/div); CH2-ouput voltage (1V/div)

Figure 9 Output voltage startup by remote ON, (5ms/div), see Figure 11 for test configuration; CH1-remote ON (5V/div); CH2-output voltage (1V/div)

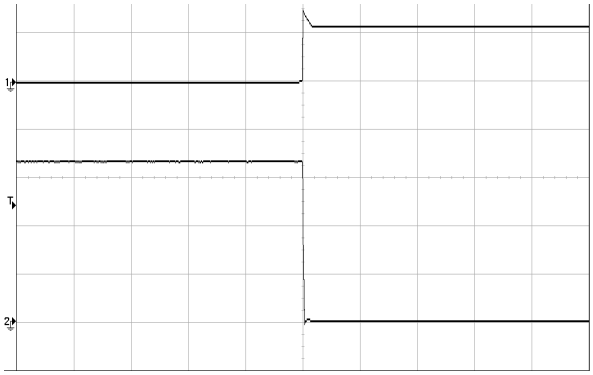

Figure 10 Output voltage shutdown by remote OFF, (5ms/div), see Figure 11 for test configuration; CH1-remote OFF voltage (5V/div); CH2-output voltage (1V/div)

Application Note

Typical Application

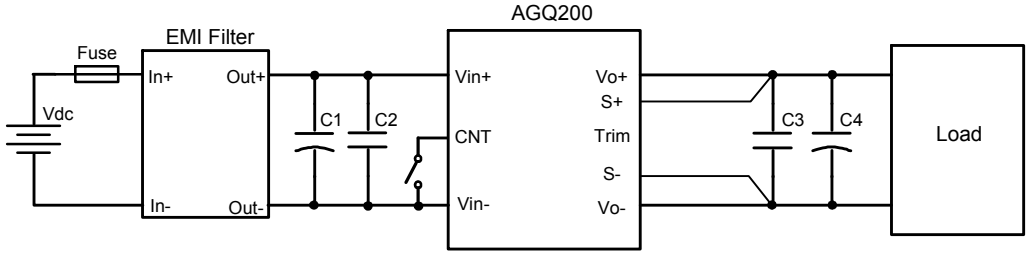

Figure 11 Typical application

C1: 100μF/100V electrolytic capacitor, P/N: UVZ2A101MPD (Nichicon) or equivalent caps
C2: 1μF/100V X7R ceramic capacitor
C3: 1μF/25V X7R ceramic capacitor
C4: 470μF/25V electrolytic capacitor, P/N: UPM1E471MPD (Nichicon) or equivalent caps
External fast blow fuse with a rating of 15A should be used in the application.
If the load is far from the unit, connect S+ and S- to the terminal of the load respectively to compensate the voltage drop on the transmission line.

Remote ON/OFF

Either positive or negative remote ON/OFF logic is available in AGQ200B-48S3V3.
The following figure is the detailed internal circuit and reference in AGQ200B-48S3V3.

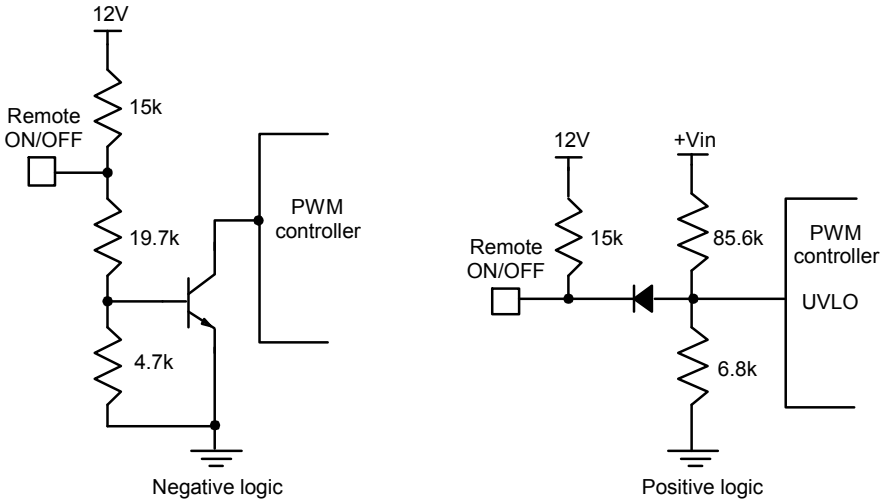

Figure 12 Remote ON/OFF internal diagram

Trim Characteristics

Connecting an external resistor between Trim pin and V_o- pin will decrease the output voltage. While connecting it between Trim and V_o+ will increase the output voltage. The following equations determine the external resistance to obtain the trimmed output voltage.

$$R_{trim-down} = \frac{510}{\Delta} - 10.2(k\Omega)$$

$$R_{trim-up} = \frac{5.1 \times V_{nom} \times (100 + \Delta)}{1.225 \times \Delta} - \frac{510}{\Delta} - 10.2(k\Omega)$$

$\triangle = (V_o - V_{nom}) \times 100 / V_{nom}$

V_{nom}: Nominal output voltage

For example, to get 3.63V output, the trimming resistor is

$$R_{trim-up} = \frac{5.1 \times 3.3 \times (100 + (3.63 - 3.3) \times 100 / 3.3)}{1.225 \times (3.63 - 3.3) \times 100 / 3.3} - \frac{510}{(3.63 - 3.3) \times 100 / 3.3} - 10.2 = 89.9(k\Omega)$$

The output voltage can also be trimmed by potential applied at the Trim pin.

$$V_o = 1.347 V_{trim} + 1.65$$

Where V_{trim} is the potential applied at the Trim pin, and V_o is the desired output voltage.

When trimming up, the output current should be decreased accordingly so as not to exceed the maximum output power.

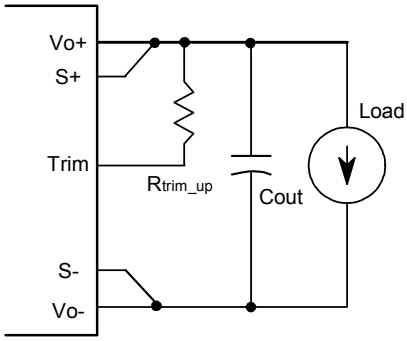

Figure 13 Trim up

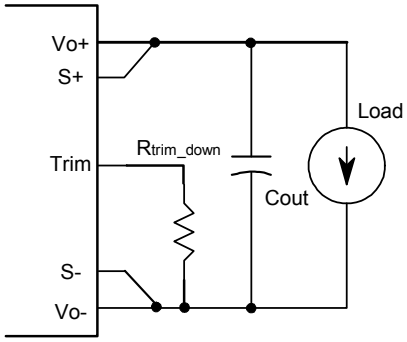

Figure 14 Trim down

Input Ripple & Inrush Current And Output Ripple & Noise Test Configuration

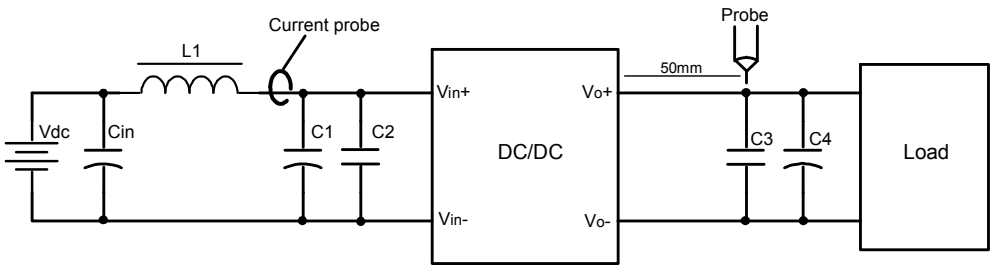

Figure 15 Input ripple & inrush current, ripple & noise test configuration

Vdc: DC power supply
L1: 12μH
Cin: 220μF/100V typical
C1 ~ C4: See Figure 11

EMC Filter Configuration

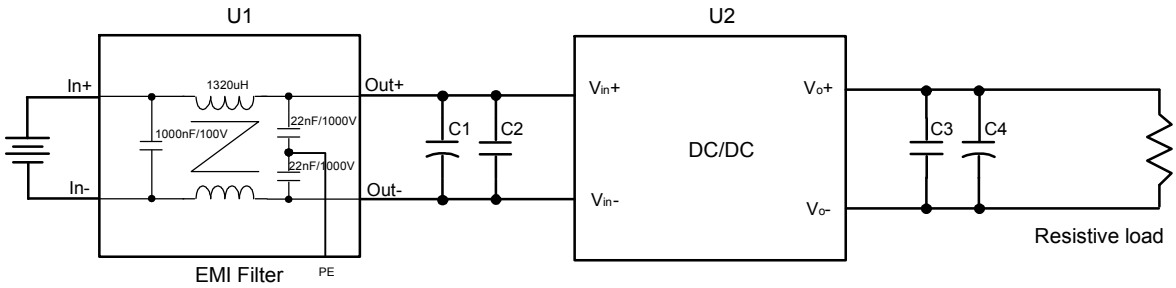

Figure 16 EMC test configuration

U1: 5A input EMC filter module
U2: Module to test, AGQ200B-48S3V3
C1 ~ C4: See Figure 11

Mechanical Diagram

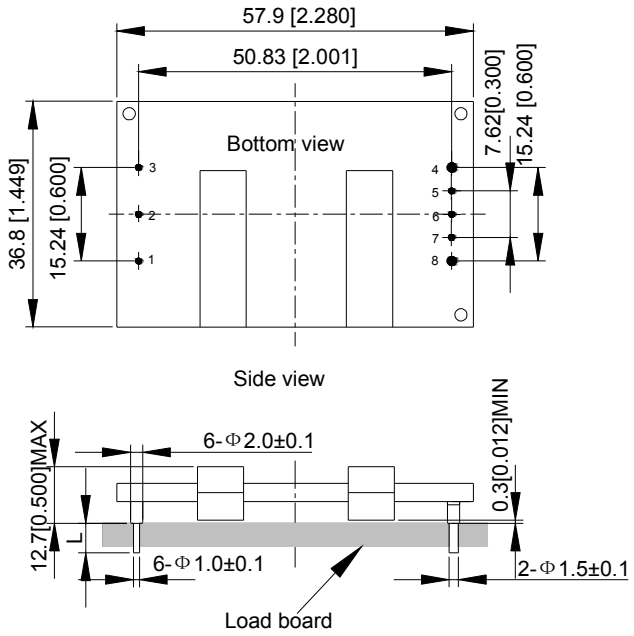

Unit: mm[inch] Bottom view: pin on upside

Tolerance: X.Xmm±0.5mm[X.X in.±0.02in.]
X.XXmm±0.25mm[X.XX in.±0.01in.]

Figure 17 Mechanical diagram

Pin length options

Device code suffix	L
-4	4.8mm±0.2mm
-6	3.8mm±0.2mm
-8	2.8mm±0.2mm
None	5.8mm±0.2mm

Pin Designations

Pin NO.	Name	Function
1	V_{in}+	Positive input voltage
2	Remote ON/OFF	Remote control
3	V_{in}-	Negative input voltage
4	V_o-	Negative output voltage
5	S-	Negative remote sense
6	Trim	Output voltage trim
7	S+	Positive remote sense
8	V_o+	Positive output voltage

Soldering

The product is intended for standard manual or wave soldering.
When wave soldering is used, the temperature on pins is specified to maximum 260°C for maximum 7s.
When manual soldering is used, the iron temperature should be maintained at 300°C ~ 380°C and applied to the converter pins for less than 10s. Longer exposure can cause internal damage to the converter.
Cleaning of solder joint can be performed with cleaning solvent IPA or similative.

Assembly

The maximum length of the screw driven into the heat-sink is 3.3mm.

Thermal Considerations

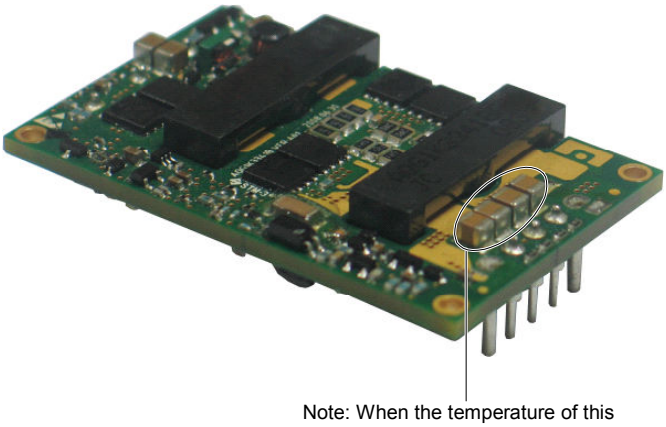

Note: When the temperature of this test point is lower than 100℃, the module thermal reliability is available

Figure 18 Temperature test point on converter

Ordering Information

AGQ200B	-	48	S	3V3	P	B	-	4	L
①		②	③	④	⑤	⑥		⑦	⑧

①	Model series	AGQ: series name, 200B: rated output power 200W. The lower output is limited by its current
②	Input voltage	48: 36V ~ 75V input range, rated input voltage 48V
③	Output number	S: single output. D:dual output
④	Rated output voltage	3V3: 3.3V output
⑤	Remote ON/OFF logic	Default: negative logic; P: positive logic
⑥	Baseplated	Baseplated. Default: no baseplate.
⑦	Pin length	-4: 4.8±0.2mm
⑧	RoHS status	L: RoHS, R6; Y: RoHS, R5

Model number	Description
AGQ200B-48S3V3-4L	4.8mm pin length; negative on/off logic; no baseplate; R6 compliant
AGQ200B-48S3V3P-4L	4.8mm pin length; positive on/off logic; no baseplate; R6 compliant
AGQ200B-48S3V3B-4L	4.8mm pin length; negative on/off logic; baseplated; R6 compliant
AGQ200B-48S3V3PB-4L	4.8mm pin length; positive on/off logic; baseplated; R6 compliant
AGQ200B-48S3V3-4Y	4.8mm pin length; negative on/off logic; no baseplate; R5 compliant
AGQ200B-48S3V3B-4Y	4.8mm pin length; negative on/off logic; baseplated; R5 compliant

Hazardous Substances Announcement (RoHS Of China R6)

Hazardous substances					
Pb	Hg	Cd	Cr^{6+}	PBB	PBDE
○	○	○	○	○	○

○: Means the content of the hazardous substances in all the average quality materials of the part is within the limits specified in SJ/T-11363-2006

√: Means the content of the hazardous substances in at least one of the average quality materials of the part is outside the limits specified in SJ/T11363-2006

Emerson Network Power Co., Ltd. has been committed to the design and manufacturing of environment-friendly products. It will reduce and eventually eliminate the hazardous substances in the products through unremitting efforts in research. However, limited by the current technical level, the following parts still contain hazardous substances due to the lack of reliable substitute or mature solution:

1. high-temperature solder contain plumbum.
2. Glass of electric parts contains plumbum.
3. Copper alloy of pins contains plumbum

Hazardous Substances Announcement (RoHS Of China R5)

Hazardous substances					
Pb	Hg	Cd	Cr^{6+}	PBB	PBDE
√	○	○	○	○	○

○: Means the content of the hazardous substances in all the average quality materials of the part is within the limits specified in SJ/T-11363-2006

√: Means the content of the hazardous substances in at least one of the average quality materials of the part is outside the limits specified in SJ/T11363-2006

Emerson Network Power Co., Ltd. has been committed to the design and manufacturing of environment-friendly products. It will reduce and eventually eliminate the hazardous substances in the products through unremitting efforts in research. However, limited by the current technical level, the following parts still contain hazardous substances due to the lack of reliable substitute or mature solution:

1. Solders (including high-temperature solder in parts) contain plumbum.
2. Glass of electric parts contains plumbum.
3. Copper alloy of pins contains plumbum

Компания «ЭлектроПласт» предлагает заключение долгосрочных отношений при поставках импортных электронных компонентов на взаимовыгодных условиях!

Наши преимущества:

- Оперативные поставки широкого спектра электронных компонентов отечественного и импортного производства напрямую от производителей и с крупнейших мировых складов;
- Поставка более 17-ти миллионов наименований электронных компонентов;
- Поставка сложных, дефицитных, либо снятых с производства позиций;
- Оперативные сроки поставки под заказ (от 5 рабочих дней);
- Экспресс доставка в любую точку России;
- Техническая поддержка проекта, помощь в подборе аналогов, поставка прототипов;
- Система менеджмента качества сертифицирована по Международному стандарту ISO 9001;
- Лицензия ФСБ на осуществление работ с использованием сведений, составляющих государственную тайну;
- Поставка специализированных компонентов (Xilinx, Altera, Analog Devices, Intersil, Interpoint, Microsemi, Aeroflex, Peregrine, Syfer, Eurofarad, Texas Instrument, Miteq, Cobham, E2V, MA-COM, Hittite, Mini-Circuits,General Dynamics и др.);

Помимо этого, одним из направлений компании «ЭлектроПласт» является направление «Источники питания». Мы предлагаем Вам помощь Конструкторского отдела:

- Подбор оптимального решения, техническое обоснование при выборе компонента;
- Подбор аналогов;
- Консультации по применению компонента;
- Поставка образцов и прототипов;
- Техническая поддержка проекта;
- Защита от снятия компонента с производства.

Как с нами связаться

Телефон: 8 (812) 309 58 32 (многоканальный)
Факс: 8 (812) 320-02-42
Электронная почта: org@eplast1.ru
Адрес: 198099, г. Санкт-Петербург, ул. Калинина, дом 2, корпус 4, литера А.