High Voltage, Current Shunt Monitor

Data Sheet **AD8215**

FEATURES

- ±4000 V HBM ESD
- High common-mode voltage range
  - −2 V to +65 V operating
  - −3 V to +68 V survival
- Buffered output voltage
- Wide operating temperature range
  - 8-Lead SOIC_N: −40°C to +125°C
- Excellent ac and dc performance
  - 6 µV/°C typical offset drift
  - −8 ppm/°C typical gain drift
  - 120 dB typical CMRR at dc

APPLICATIONS

- High-side current sensing
  - Motor controls
  - Transmission controls
  - Engine management
  - Suspension controls
  - Vehicle dynamic controls
  - DC-to-dc converters
- Qualified for automotive applications

FUNCTIONAL BLOCK DIAGRAM

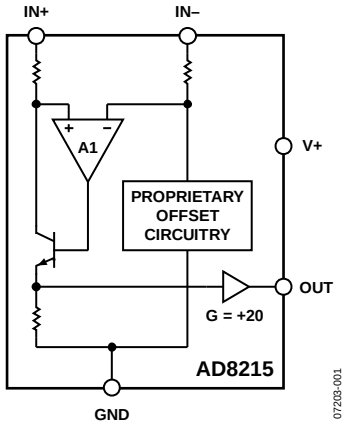

Figure 1.

GENERAL DESCRIPTION

The AD8215 is a high voltage, precision current shunt monitor. It features a set gain of 20 V/V, with a maximum ±0.3% gain error over the entire temperature range. The buffered output voltage directly interfaces with any typical converter. Excellent common-mode rejection from −2 V to +65 V is independent of the 5 V supply. The AD8215 performs unidirectional current measurements across a shunt resistor in a variety of industrial and automotive applications, such as motor controls, solenoid controls, or battery management.

Special circuitry is devoted to output linearity being maintained throughout the input differential voltage range of 0 mV to 250 mV, regardless of the common-mode voltage present. The AD8215 has an operating temperature range of −40°C to +125°C and is offered in a small 8-lead SOIC_N package.

Rev. A
Information furnished by Analog Devices is believed to be accurate and reliable. However, no responsibility is assumed by Analog Devices for its use, nor for any infringements of patents or other rights of third parties that may result from its use. Specifications subject to change without notice. No license is granted by implication or otherwise under any patent or patent rights of Analog Devices. Trademarks and registered trademarks are the property of their respective owners.

One Technology Way, P.O. Box 9106, Norwood, MA 02062-9106, U.S.A.
Tel: 781.329.4700 www.analog.com
Fax: 781.461.3113 ©2008-2011 Analog Devices, Inc. All rights reserved.

TABLE OF CONTENTS

Features ... 1
Applications ... 1
Functional Block Diagram ... 1
General Description ... 1
Revision History ... 2
Specifications ... 3
Absolute Maximum Ratings ... 4
ESD Caution ... 4
Pin Configuration and Function Descriptions ... 5
Typical Performance Characteristics ... 6
Theory of Operation ... 10
Application Notes ... 11
Output Linearity ... 11
Applications Information ... 12
High-Side Current Sensing with a Low-Side Switch ... 12
High-Side Current Sensing ... 12
Low-Side Current Sensing ... 12
Outline Dimensions ... 13
Ordering Guide ... 13
Automotive Products ... 13

REVISION HISTORY

10/11—Rev. 0 to Rev. A

Change to Applications Section ... 1
Updated Outline Dimensions ... 13
Changes to Ordering Guide ... 13
Added Automotive Products Section ... 13

1/08—Revision 0: Initial Version

SPECIFICATIONS

T_{OPR} = −40°C to +125°C, T_A = 25°C, V_S = 5 V, R_L = 25 kΩ (R_L is the output load resistor), unless otherwise noted.

Table 1.

Parameter	Min	Typ	Max	Unit	Conditions
GAIN					
Initial		20		V/V	
Accuracy			±0.15	%	$V_O \geq 0.1$ V dc, T_A
Accuracy Over Temperature			±0.3	%	T_{OPR}
Drift	0	−8	−15	ppm/°C	T_{OPR}
VOLTAGE OFFSET					
Offset Voltage, RTI			±1	mV	T_A
Over Temperature, RTI			±2.5	mV	T_{OPR}
Drift	−15	+6	+18	µV/°C	T_{OPR}
INPUT					
Input Impedance					
Differential		5		kΩ	
Common Mode		5		MΩ	Common-mode voltage > 5 V
		3.5		kΩ	Common-mode voltage < 5 V
Common-Mode Input Voltage Range	−2		+65	V	Common-mode continuous
Differential Input Voltage Range		250		mV	Differential input voltage
Common-Mode Rejection Ratio	100	120		dB	T_{OPR}, f = dc to 50 kHz, V_{CM} > 5 V
	80	90		dB	T_{OPR}, f = dc to 40 kHz, V_{CM} < 5 V
OUTPUT					
Output Voltage Range Low		0.03		V	T_A
	0.10			V	T_{OPR}
Output Voltage Range High		4.95		V	T_A
			4.90	V	T_{OPR}
Output Impedance		2		Ω	
DYNAMIC RESPONSE					
Small Signal −3 dB Bandwidth		450		kHz	T_{OPR}
Slew Rate		4.5		V/µs	T_A
NOISE					
0.1 Hz to 10 Hz, RTI		7		µV p-p	
Spectral Density, 1 kHz, RTI		70		nV/√Hz	
POWER SUPPLY					
Operating Range	4.5		5.5	V	
Quiescent Current Over Temperature		1.3	2.2	mA	V_{CM} > 5 V[1], T_{OPR}
Power Supply Rejection Ratio	75			dB	T_{OPR}
TEMPERATURE RANGE					
For Specified Performance	−40		+125	°C	

[1] When the input common-mode voltage is less than 5 V, the supply current increases, which can be calculated by $I_S = -0.275 (V_{CM}) + 2.5$.

ABSOLUTE MAXIMUM RATINGS

Table 2.

Parameter	Rating
Supply Voltage	12.5 V
Continuous Input Voltage	−3 V to +68 V
Continuous Differential Input Voltage	0.5 V
Reverse Supply Voltage	−0.3 V
Human Body Model (HBM) ESD Rating	±4000 V
Charged Device Model (CDM) ESD Rating	±1000 V
Operating Temperature Range	−40°C to +125°C
Storage Temperature Range	−65°C to +150°C
Output Short-Circuit Duration	Indefinite

Stresses above those listed under Absolute Maximum Ratings may cause permanent damage to the device. This is a stress rating only; functional operation of the device at these or any other conditions above those indicated in the operational section of this specification is not implied. Exposure to absolute maximum rating conditions for extended periods may affect device reliability.

ESD CAUTION

ESD (electrostatic discharge) sensitive device. Charged devices and circuit boards can discharge without detection. Although this product features patented or proprietary protection circuitry, damage may occur on devices subjected to high energy ESD. Therefore, proper ESD precautions should be taken to avoid performance degradation or loss of functionality.

PIN CONFIGURATION AND FUNCTION DESCRIPTIONS

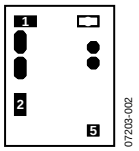

Figure 2. Metallization Diagram

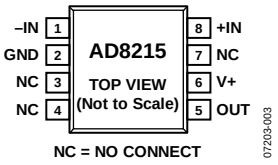

Figure 3. Pin Configuration

Table 3. Pin Function Descriptions

Pin No.	Mnemonic	X	Y	Description
1	−IN	−228	+519	Inverting Input.
2	GND	−273	−251	Ground.
3, 4, 7	NC	N/A	N/A	No Connect.
5	OUT	+265	−466	Buffered Output.
6	V+	+273	−266	Supply.
8	+IN	+229	+519	Noninverting Input.

TYPICAL PERFORMANCE CHARACTERISTICS

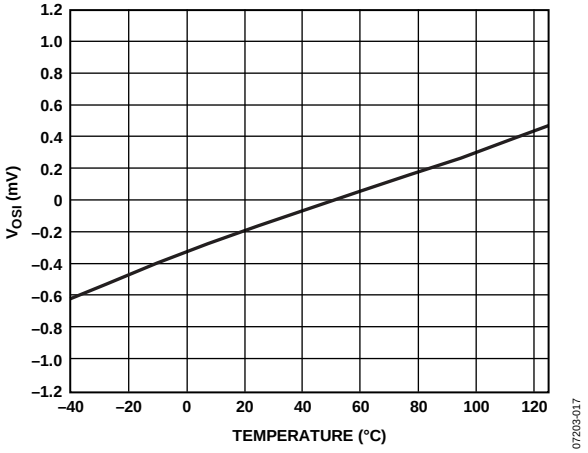

Figure 4. Typical Offset Drift vs. Temperature

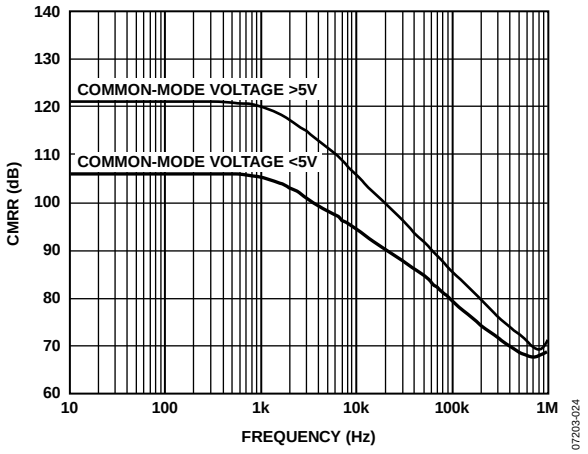

Figure 5. Typical CMRR vs. Frequency

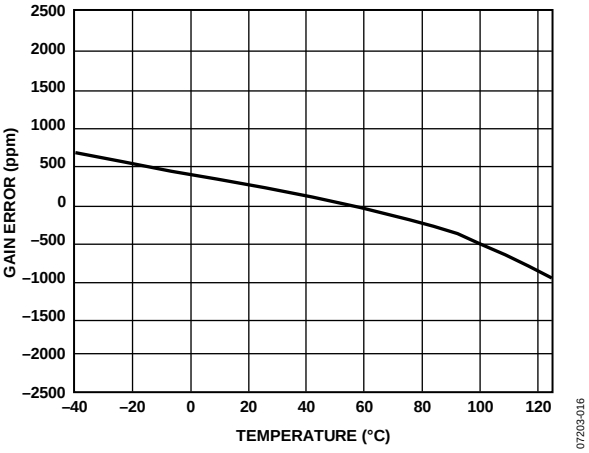

Figure 6. Typical Gain Error vs. Temperature

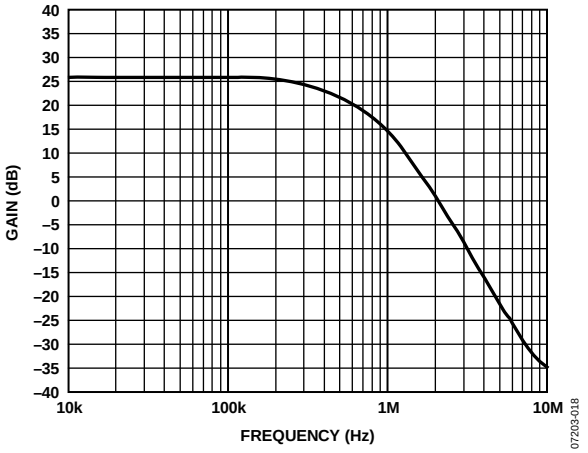

Figure 7. Typical Small Signal Bandwidth (V_{OUT} = 200 mV p-p)

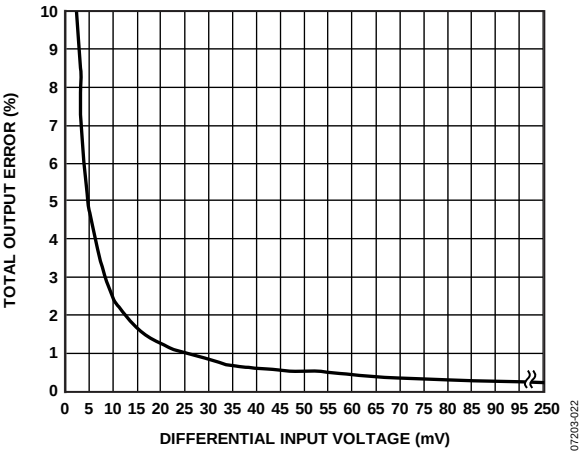

Figure 8. Total Output Error vs. Differential Input Voltage

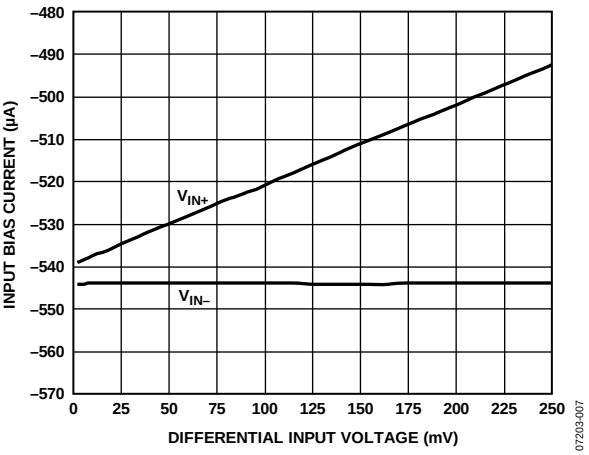

Figure 9. Input Bias Current vs. Differential Input Voltage, V_{CM} = 0 V

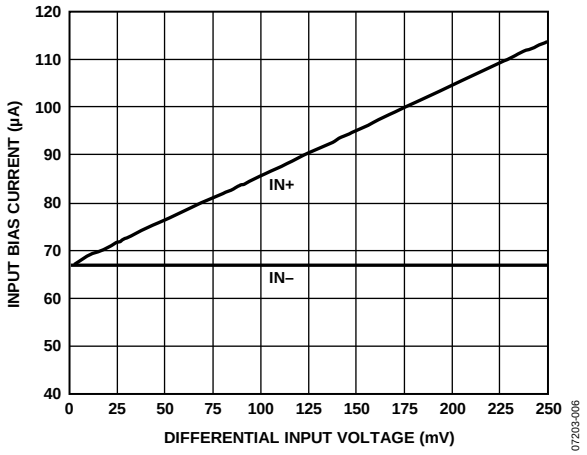

Figure 10. Input Bias Current vs. Differential Input Voltage, V_{CM} = 5 V

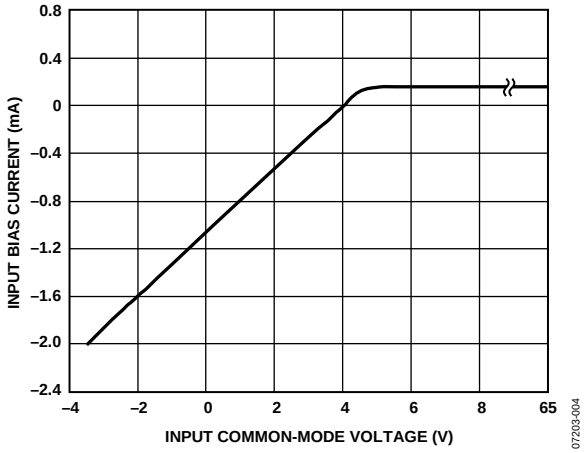

Figure 11. Input Bias Current vs. Input Common-Mode Voltage

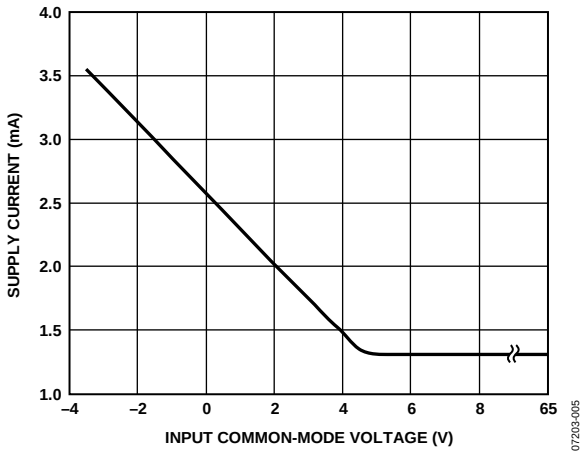

Figure 12. Supply Current vs. Common-Mode Voltage

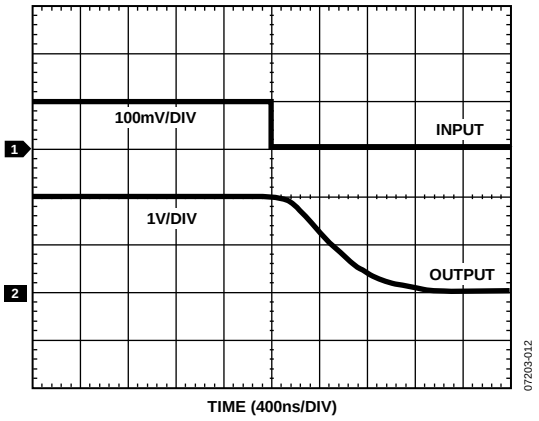

Figure 13. Fall Time

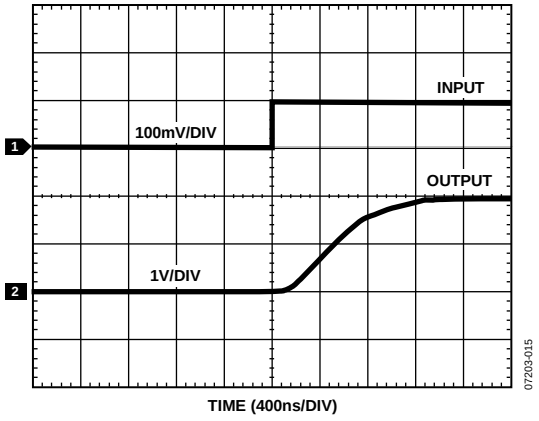

Figure 14. Rise Time

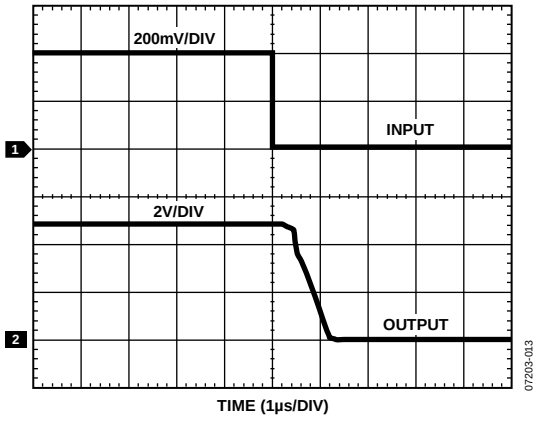

Figure 15. Differential Overload Recovery (Falling)

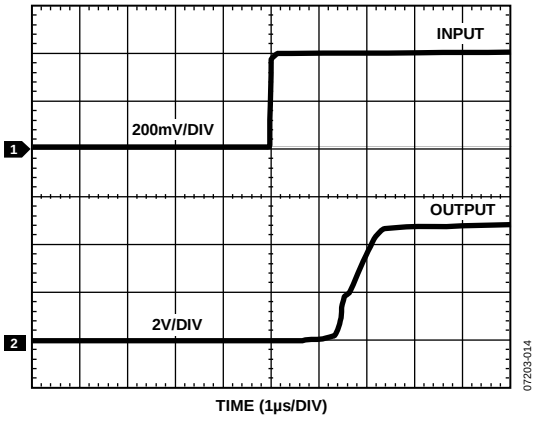

Figure 16. Differential Overload Recovery (Rising)

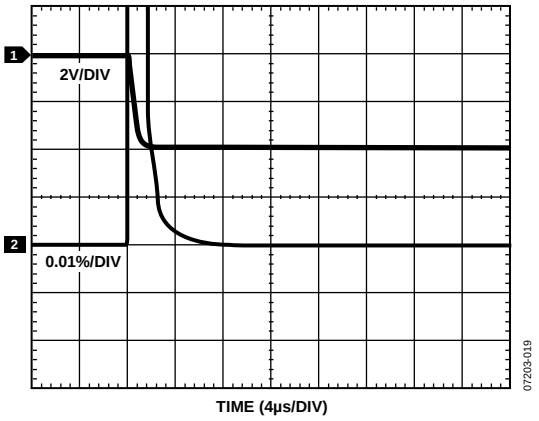

Figure 17. Settling Time (Falling)

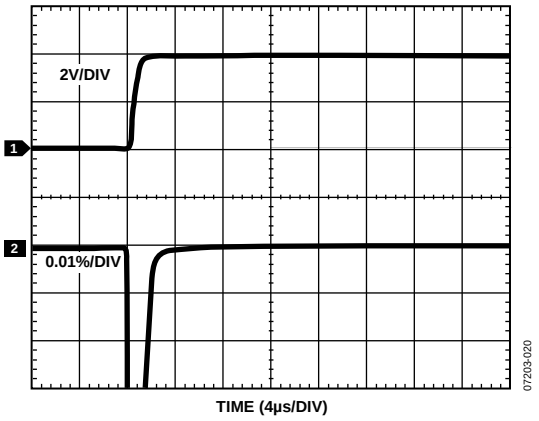

Figure 18. Settling Time (Rising)

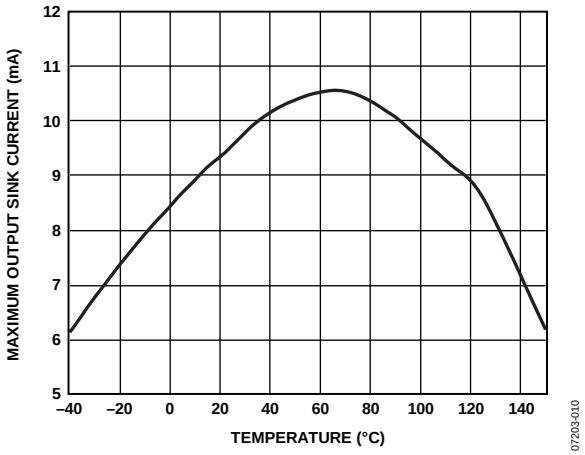

Figure 19. Maximum Output Sink Current vs. Temperature

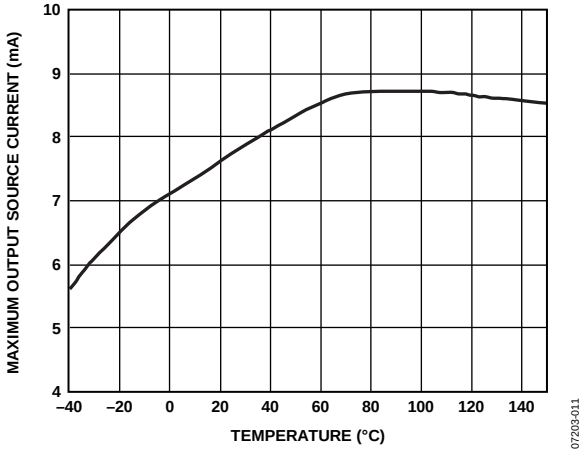

Figure 20. Maximum Output Source Current vs. Temperature

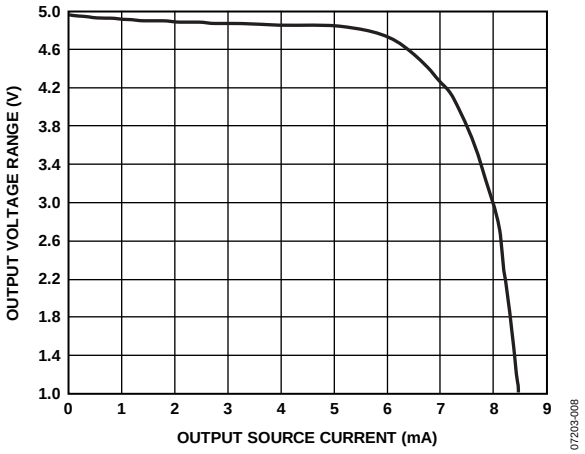

Figure 21. Output Voltage Range vs. Output Source Current

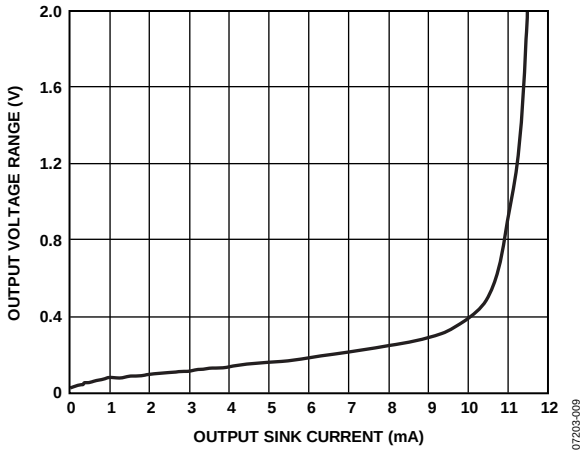

Figure 22. Output Voltage Range from GND vs. Output Sink Current

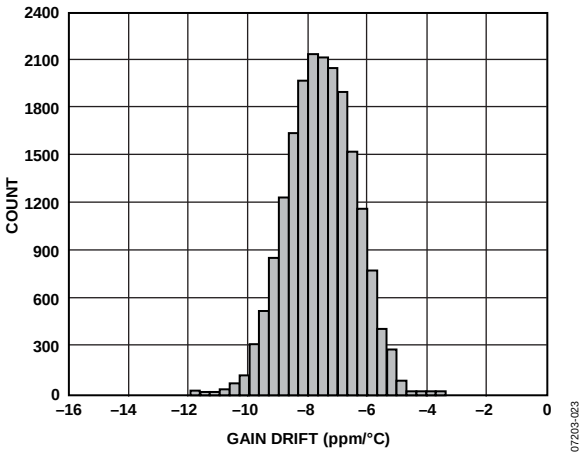

Figure 24. Gain Drift Distribution

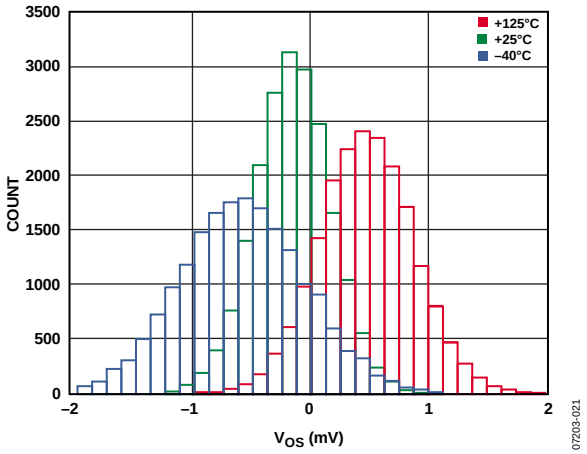

Figure 23. Offset Distribution

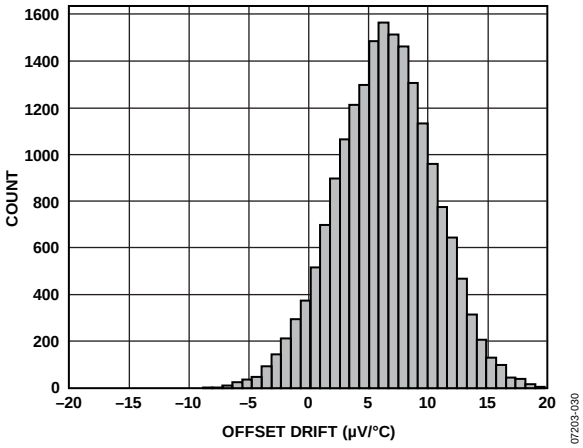

Figure 25. Offset Drift

THEORY OF OPERATION

In typical applications, the AD8215 amplifies a small differential input voltage generated by the load current flowing through a shunt resistor. The AD8215 rejects high common-mode voltages (up to 65 V) and provides a ground-referenced, buffered output that interfaces with an analog-to-digital converter (ADC). Figure 26 shows a simplified schematic of the AD8215.

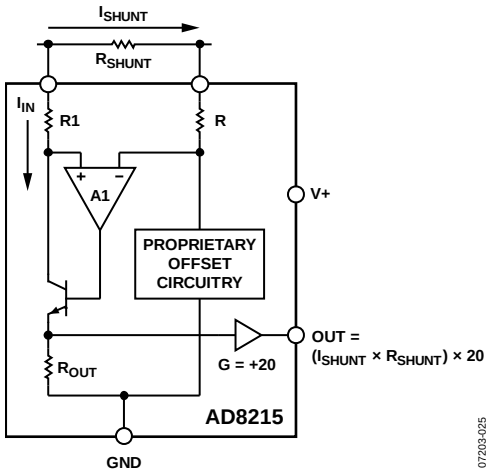

Figure 26. Simplified Schematic

A load current flowing through the external shunt resistor produces a voltage at the input terminals of the AD8215. The input terminals are connected to A1 by R and R1. The inverting terminal, which has very high input impedance, is held to

$$(V_{CM}) - (I_{SHUNT} \times R_{SHUNT})$$

because negligible current flows through R. A1 forces the noninverting input to the same potential. Therefore, the current that flows through R1 is equal to

$$I_{IN} = (I_{SHUNT} \times R_{SHUNT})/R1$$

This current (I_{IN}) is converted back to a voltage via R_{OUT}. The output buffer amplifier has a gain of 20 V/V and offers excellent accuracy as the internal gain setting resistors are precision trimmed to within 0.01% matching. The resulting output voltage is equal to

$$OUT = (I_{SHUNT} \times R_{SHUNT}) \times 20$$

APPLICATION NOTES

OUTPUT LINEARITY

In all current sensing applications, and especially in automotive and industrial environments where the common-mode voltage can vary significantly, it is important that the current sensor maintain the specified output linearity, regardless of the input differential or common-mode voltage. The AD8215 contains specific circuitry on the input stage, which ensures that even when the differential input voltage is very small and the common-mode voltage is also low (below the 5 V supply), the input-to-output linearity is maintained. Figure 27 shows the differential input voltage vs. the corresponding output voltage at different common modes.

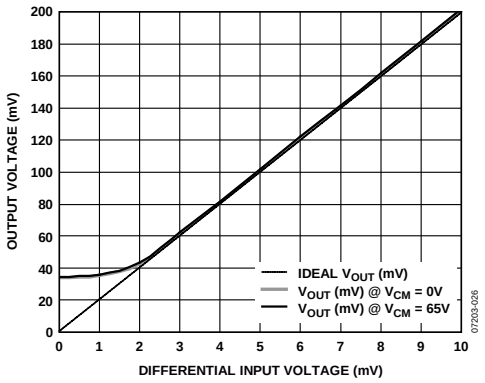

Figure 27. Gain Linearity Due to Differential and Common-Mode Voltage

Regardless of the common mode, the AD8215 provides a correct output voltage when the differential input is at least 2 mV, which is due to the voltage range of the output amplifier that can go as low as 33 mV typical. The specified minimum output amplifier voltage is 100 mV to provide sufficient guard-bands. The ability of the AD8215 to work with very small differential inputs, regardless of the common-mode voltage, allows for more dynamic range, accuracy, and flexibility in any current sensing application.

APPLICATIONS INFORMATION

HIGH-SIDE CURRENT SENSING WITH A LOW-SIDE SWITCH

In such load control configurations, the PWM-controlled switch is ground referenced. An inductive load (solenoid) is tied to a power supply. A resistive shunt is placed between the switch and the load (see Figure 28). An advantage of placing the shunt on the high side is that the entire current, including the recirculation current, can be measured because the shunt remains in the loop when the switch is off. In addition, diagnostics can be enhanced because shorts to ground can be detected with the shunt on the high side. In this circuit configuration, when the switch is closed, the common-mode voltage moves down to near the negative rail. When the switch is opened, the voltage reversal across the inductive load causes the common-mode voltage to be held one diode drop above the battery by the clamp diode.

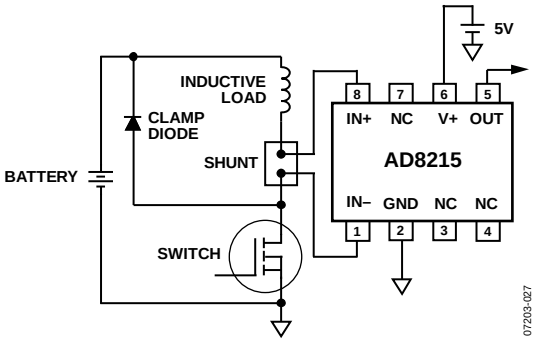

Figure 28. Low-Side Switch

HIGH-SIDE CURRENT SENSING

In this configuration, the shunt resistor is referenced to the battery. High voltage is present at the inputs of the current sense amplifier. In this mode, the recirculation current is again measured and shorts to ground can be detected. When the shunt is battery referenced, the AD8215 produces a linear ground-referenced analog output. An AD8214 can also be used to provide an over-current detection signal in as little as 100 ns (see Figure 29). This feature is useful in high current systems where fast shutdown in over-current conditions is essential.

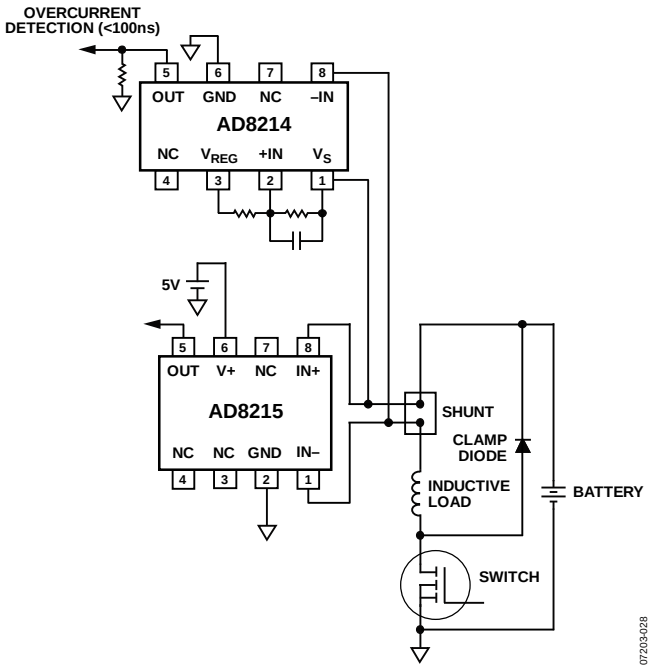

Figure 29. Battery-Referenced Shunt Resistor

LOW-SIDE CURRENT SENSING

In systems where low-side current sensing is preferred, the AD8215 provides an integrated solution with great accuracy. Ground noise is rejected, CMRR is typically higher than 90 dB, and output linearity is not compromised, regardless of the input differential voltage.

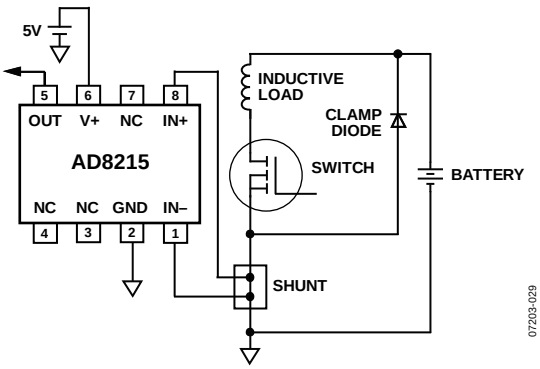

Figure 30. Ground-Referenced Shunt Resistor

OUTLINE DIMENSIONS

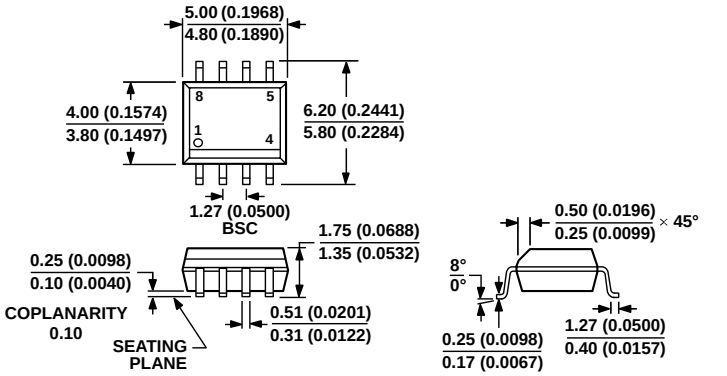

Figure 31. 8-Lead Standard Small Outline Package [SOIC_N]
Narrow Body
(R-8)
Dimensions shown in millimeters and (inches)

ORDERING GUIDE

Model[1, 2]	Temperature Range	Package Description	Package Option
AD8215YRZ	−40°C to +125°C	8-Lead SOIC_N	R-8
AD8215YRZ-RL	−40°C to +125°C	8-Lead SOIC_N, 13″Tape and Reel	R-8
AD8215YRZ-R7	−40°C to +125°C	8-Lead SOIC_N, 7″Tape and Reel	R-8
AD8215WYRZ	−40°C to +125°C	8-Lead SOIC_N	R-8
AD8215WYRZ-R7	−40°C to +125°C	8-Lead SOIC_N, 7″Tape and Reel	R-8
AD8215WYRZ-RL	−40°C to +125°C	8-Lead SOIC_N, 13″Tape and Reel	R-8

[1] Z = RoHS Compliant Part.
[2] W = Qualified for Automotive Applications.

AUTOMOTIVE PRODUCTS

The AD8215WYRZ models are available with controlled manufacturing to support the quality and reliability requirements of automotive applications. Note that these automotive models may have specifications that differ from the commercial models; therefore designers should review the Specifications section of this data sheet carefully. Only the automotive grade products shown are available for use in automotive applications. Contact your local Analog Devices account representative for specific product ordering information and to obtain the specific Automotive Reliability reports for these models.

NOTES

NOTES

NOTES

©2008-2011 Analog Devices, Inc. All rights reserved. Trademarks and registered trademarks are the property of their respective owners.
D07203-0-10/11(A)

Компания «ЭлектроПласт» предлагает заключение долгосрочных отношений при поставках импортных электронных компонентов на взаимовыгодных условиях!

Наши преимущества:

- Оперативные поставки широкого спектра электронных компонентов отечественного и импортного производства напрямую от производителей и с крупнейших мировых складов;
- Поставка более 17-ти миллионов наименований электронных компонентов;
- Поставка сложных, дефицитных, либо снятых с производства позиций;
- Оперативные сроки поставки под заказ (от 5 рабочих дней);
- Экспресс доставка в любую точку России;
- Техническая поддержка проекта, помощь в подборе аналогов, поставка прототипов;
- Система менеджмента качества сертифицирована по Международному стандарту ISO 9001;
- Лицензия ФСБ на осуществление работ с использованием сведений, составляющих государственную тайну;
- Поставка специализированных компонентов (Xilinx, Altera, Analog Devices, Intersil, Interpoint, Microsemi, Aeroflex, Peregrine, Syfer, Eurofarad, Texas Instrument, Miteq, Cobham, E2V, MA-COM, Hittite, Mini-Circuits,General Dynamics и др.);

Помимо этого, одним из направлений компании «ЭлектроПласт» является направление «Источники питания». Мы предлагаем Вам помощь Конструкторского отдела:

- Подбор оптимального решения, техническое обоснование при выборе компонента;
- Подбор аналогов;
- Консультации по применению компонента;
- Поставка образцов и прототипов;
- Техническая поддержка проекта;
- Защита от снятия компонента с производства.

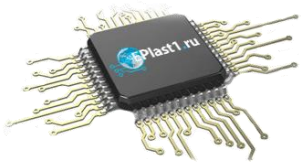

Как с нами связаться

Телефон: 8 (812) 309 58 32 (многоканальный)
Факс: 8 (812) 320-02-42
Электронная почта: org@eplast1.ru
Адрес: 198099, г. Санкт-Петербург, ул. Калинина, дом 2, корпус 4, литера А.