National Semiconductor

March 2002

LM431
Adjustable Precision Zener Shunt Regulator

General Description

The LM431 is a 3-terminal adjustable shunt regulator with guaranteed temperature stability over the entire temperature range of operation. It is now available in a chip sized package (4-Bump micro SMD) using National's micro SMD package technology. The output voltage may be set at any level greater than 2.5V (V_{REF}) up to 36V merely by selecting two external resistors that act as a voltage divided network. Due to the sharp turn-on characteristics this device is an excellent replacement for many zener diode applications.

Features

- Average temperature coefficient 50 ppm/˚C
- Temperature compensated for operation over the full temperature range
- Programmable output voltage
- Fast turn-on response
- Low output noise
- LM431 in micro SMD package
- See AN-1112 for micro SMD considerations

Connection Diagrams

TO-92: Plastic Package

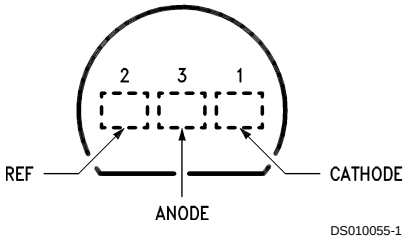

Top View

SO-8: 8-Pin Surface Mount

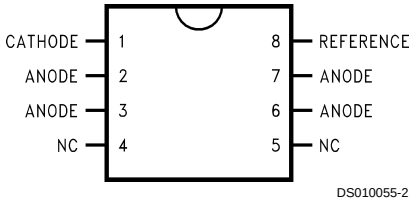

Top view

SOT-23: 3-Lead Small Outline

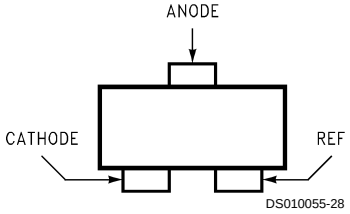

Top View

4-Bump micro SMD

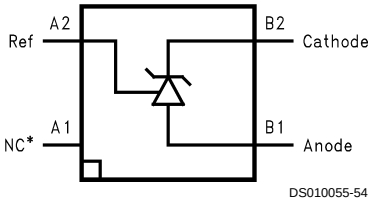

Top View
(bump side down)

Note: *NC = Not internally connected. Must be electrically isolated from the rest of the circuit for the microSMD package.

© 2002 National Semiconductor Corporation

Ordering Information

Package	Typical Accuracy Order Number/Package Marking			Temperature Range	Transport Media	NSC Drawing
	0.5%	1%	2%			
TO-92	LM431CCZ/ LM431CCZ	LM431BCZ/ LM431BCZ	LM431ACZ/ LM431ACZ	0˚C to +70˚C	Rails	Z03A
	LM431CIZ/ LM431CIZ	LM431BIZ/ LM431BIZ	LM431AIZ/ LM431AIZ	−40˚C to +85˚C		
SO-8	LM431CCM/ 431CCM	LM431BCM/ 431BCM	LM431ACM/ LM431ACM	0˚C to +70˚C	Rails and Tape &Reel	M08A
	LM431CIM/ 431CIM	LM431BIM/ 431BIM	LM431AIM/ LM431AIM	−40˚C to +85˚C		
SOT-23	LM431CCM3/ N1B	LM431BCM3/ N1D	LM431ACM3/ N1F	0˚C to +70˚C	Rails and Tape &Reel	MF03A
	LM431CIM3 N1A	LM431BIM3 N1C	LM431AIM3 N1E	−40˚C to +85˚C		
micro SMD	–	–	LM431AIBP LM431AIBPX(Note 1)	−40˚C to +85˚C	250 Units Tape and Reel 3k Units Tape and Reel	BPA04AFB

Note 1: The micro SMD package marking is a 1 digit manufacturing Date Code only

micro SMD Top View Marking Example

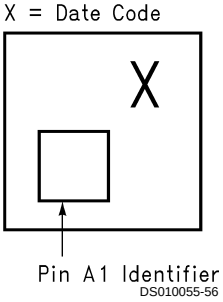

Symbol and Functional Diagrams

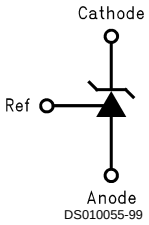

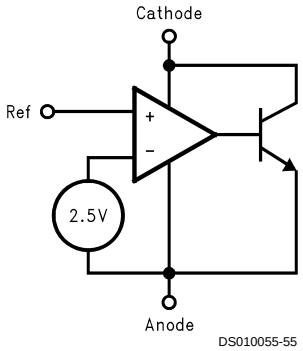

DC Test Circuits

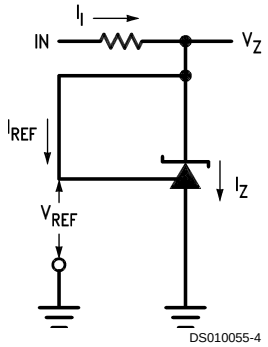

FIGURE 1. Test Circuit for $V_Z = V_{REF}$

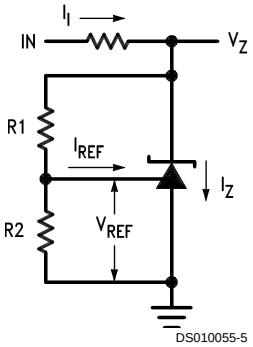

Note: $V_Z = V_{REF}$ (1 + R1/R2) + I_{REF}• R1

FIGURE 2. Test Circuit for $V_Z > V_{REF}$

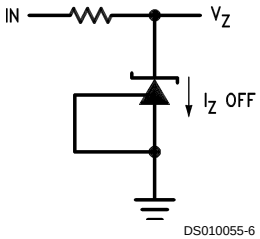

FIGURE 3. Test Circuit for Off-State Current

Absolute Maximum Ratings (Note 2)

If Military/Aerospace specified devices are required, please contact the National Semiconductor Sales Office/ Distributors for availability and specifications.

Storage Temperature Range	−65˚C to +150˚C
Operating Temperature Range	
Industrial (LM431xI)	−40˚C to +85˚C
Commercial (LM431xC)	0˚C to +70˚C
Soldering Information	
Infrared or Convection (20 sec.)	235˚C
Wave Soldering (10 sec.)	260˚C (lead temp.)
Cathode Voltage	37V
Continuous Cathode Current	−10 mA to +150 mA
Reference Voltage	−0.5V
Reference Input Current	10 mA
Internal Power Dissipation (Notes 3, 4)	
TO-92 Package	0.78W
SO-8 Package	0.81W
SOT-23 Package	0.28W
micro SMD Package	0.30W

Operating Conditions

	Min	Max
Cathode Voltage	V_{REF}	37V
Cathode Current	1.0 mA	100 mA

LM431 Electrical Characteristics

T_A = 25˚C unless otherwise specified

Symbol	Parameter	Conditions		Min	Typ	Max	Units
V_{REF}	Reference Voltage	$V_Z = V_{REF}$, I_I = 10 mA LM431A *(Figure 1)*		2.440	2.495	2.550	V
		$V_Z = V_{REF}$, I_I = 10 mA LM431B *(Figure 1)*		2.470	2.495	2.520	V
		$V_Z = V_{REF}$, I_I = 10 mA LM431C *(Figure 1)*		2.485	2.500	2.510	V
V_{DEV}	Deviation of Reference Input Voltage Over Temperature (Note 5)	$V_Z = V_{REF}$, I_I = 10 mA, T_A = Full Range *(Figure 1)*			8.0	17	mV
$\frac{\Delta V_{REF}}{\Delta V_Z}$	Ratio of the Change in Reference Voltage to the Change in Cathode Voltage	I_Z = 10 mA *(Figure 2)*	V_Z from V_{REF} to 10V		−1.4	−2.7	mV/V
			V_Z from 10V to 36V		−1.0	−2.0	
I_{REF}	Reference Input Current	R_1 = 10 kΩ, R_2 = ∞, I_I = 10 mA *(Figure 2)*			2.0	4.0	µA
$\propto I_{REF}$	Deviation of Reference Input Current over Temperature	R_1 = 10 kΩ, R_2 = ∞, I_I = 10 mA, T_A = Full Range *(Figure 2)*			0.4	1.2	µA
$I_{Z(MIN)}$	Minimum Cathode Current for Regulation	$V_Z = V_{REF}$ *(Figure 1)*			0.4	1.0	mA
$I_{Z(OFF)}$	Off-State Current	V_Z = 36V, V_{REF} = 0V *(Figure 3)*			0.3	1.0	µA
r_Z	Dynamic Output Impedance (Note 6)	$V_Z = V_{REF}$, LM431A, Frequency = 0 Hz *(Figure 1)*				0.75	Ω
		$V_Z = V_{REF}$, LM431B, LM431C Frequency = 0 Hz *(Figure 1)*				0.50	Ω

Note 2: Absolute Maximum Ratings indicate limits beyond which damage to the device may occur. Electrical specifications do not apply when operating the device beyond its rated operating conditions.

Note 3: $T_{J\ Max}$ = 150˚C.

Note 4: Ratings apply to ambient temperature at 25˚C. Above this temperature, derate the TO-92 at 6.2 mW/˚C, the SO-8 at 6.5 mW/˚C, the SOT-23 at 2.2 mW/˚C and the micro SMD at 3mW/˚C.

Note 5: Deviation of reference input voltage, V_{DEV}, is defined as the maximum variation of the reference input voltage over the full temperature range.

LM431
Electrical Characteristics (Continued)

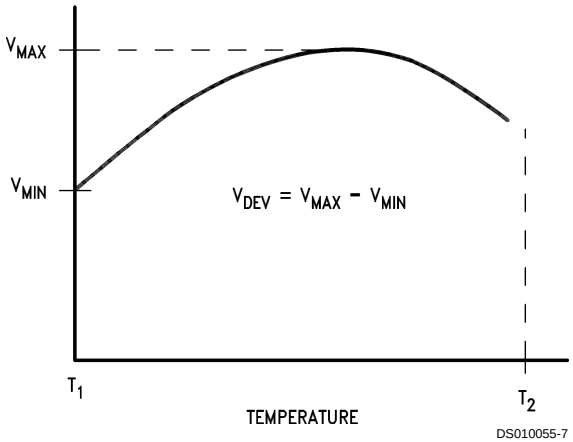

The average temperature coefficient of the reference input voltage, $\propto V_{REF}$, is defined as:

$$\propto V_{REF}\,\frac{ppm}{°C} = \frac{\pm\left[\frac{V_{Max} - V_{Min}}{V_{REF}\ (at\ 25°C)}\right]10^6}{T_2 - T_1} = \frac{\pm\left[\frac{V_{DEV}}{V_{REF}\ (at\ 25°C)}\right]10^6}{T_2 - T_1}$$

Where:

$T_2 - T_1$ = full temperature change (0-70˚C).

$\propto V_{REF}$ can be positive or negative depending on whether the slope is positive or negative.

Example: V_{DEV} = 8.0 mV, V_{REF} = 2495 mV, $T_2 - T_1$ = 70˚C, slope is positive.

$$\propto V_{REF} = \frac{\left[\frac{8.0\ mV}{2495\ mV}\right]10^6}{70°C} = +46\ ppm/°C$$

Note 6: The dynamic output impedance, r_Z, is defined as:

$$r_Z = \frac{\Delta V_Z}{\Delta I_Z}$$

When the device is programmed with two external resistors, R1 and R2, (see *Figure 2*), the dynamic output impedance of the overall circuit, r_Z, is defined as:

$$r_Z = \frac{\Delta V_Z}{\Delta I_Z} \cong \left[r_Z\left(1 + \frac{R1}{R2}\right)\right]$$

Equivalent Circuit

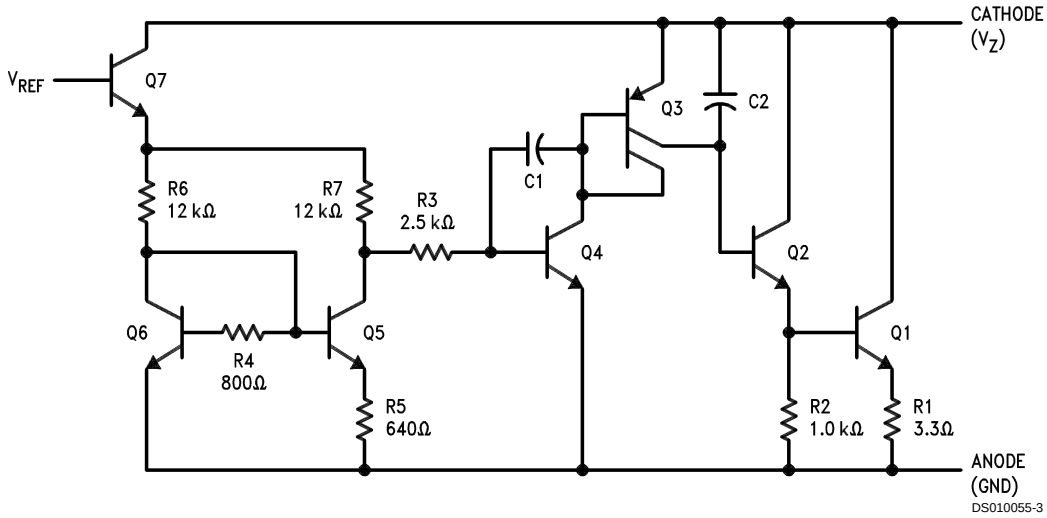

Typical Performance Characteristics

Input Current vs V_Z

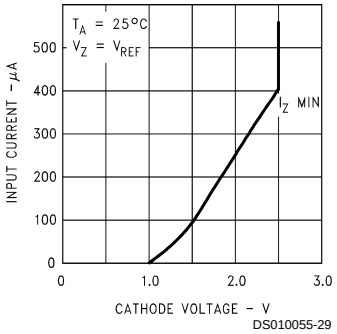

Thermal Information

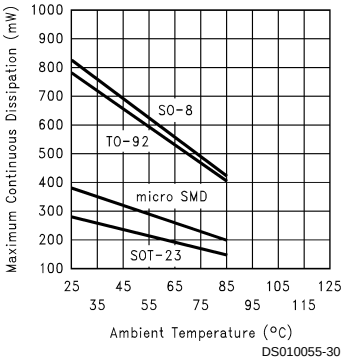

Input Current vs V_Z

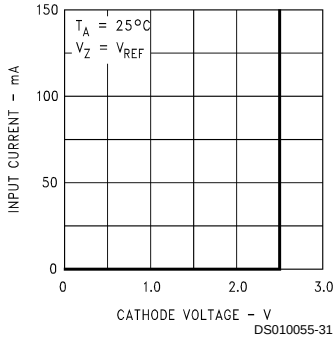

Dynamic Impedance vs Frequency

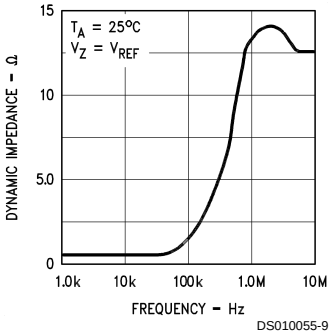

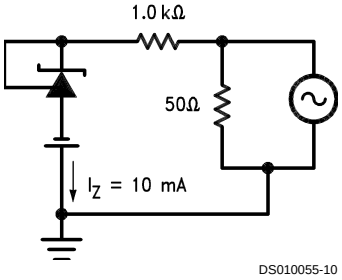

Stability Boundary Conditions

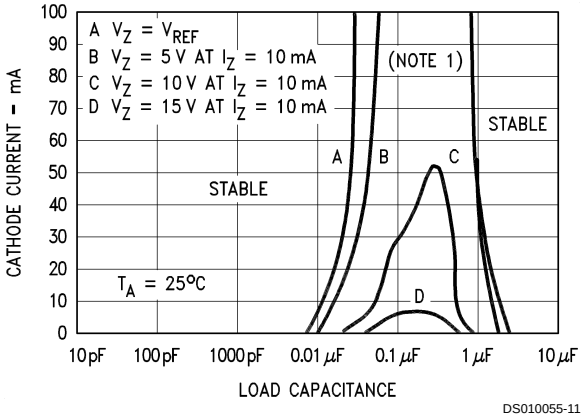

Note: The areas under the curves represent conditions that may cause the device to oscillate. For curves B, C, and D, R2 and V^+ were adjusted to establish the initial V_Z and I_Z conditions with C_L = 0. V^+ and C_L were then adjusted to determine the ranges of stability.

Test Circuit for Curve A Above

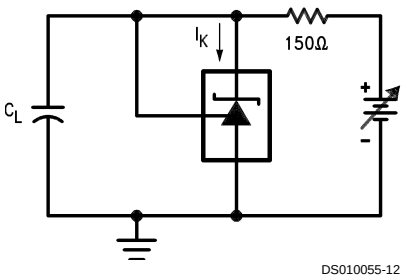

Test Circuit for Curves B, C and D Above

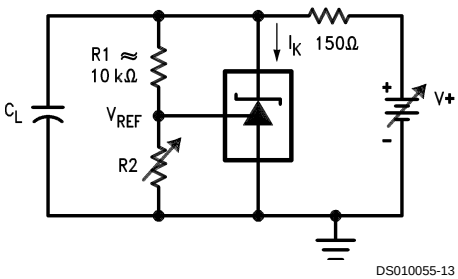

Typical Applications

Shunt Regulator

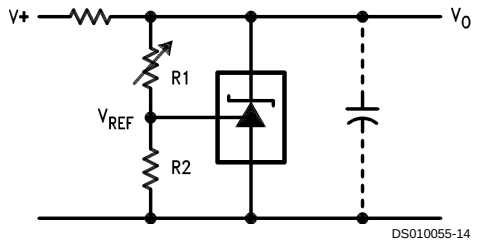

$$V_O \approx \left(1 + \frac{R1}{R2}\right) V_{REF}$$

Single Supply Comparator with Temperature Compensated Threshold

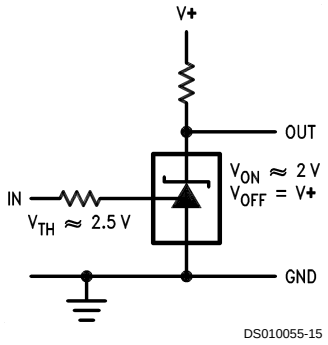

Series Regulator

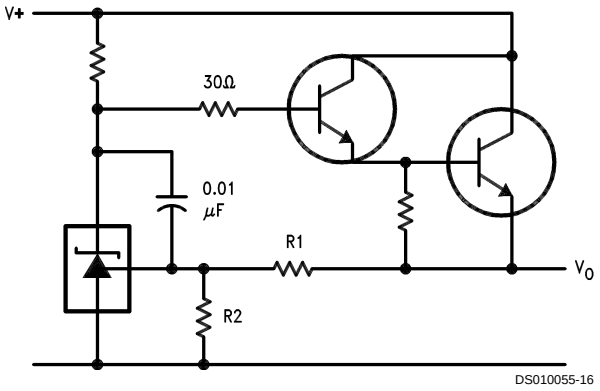

$$V_O \approx \left(1 + \frac{R1}{R2}\right) V_{REF}$$

Output Control of a Three Terminal Fixed Regulator

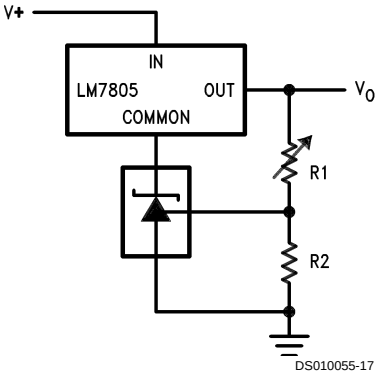

$$V_O = \left(1 + \frac{R1}{R2}\right) V_{REF}$$

$$V_{O\ MIN} = V_{REF} + 5V$$

Higher Current Shunt Regulator

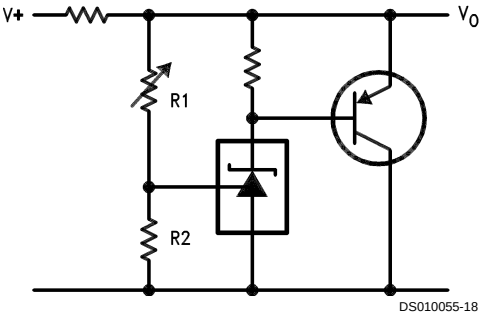

$$V_O \approx \left(1 + \frac{R1}{R2}\right) V_{REF}$$

Crow Bar

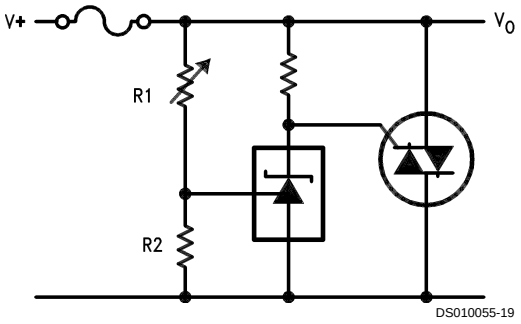

$$V_{LIMIT} \approx \left(1 + \frac{R1}{R2}\right) V_{REF}$$

Typical Applications (Continued)

Over Voltage/Under Voltage Protection Circuit

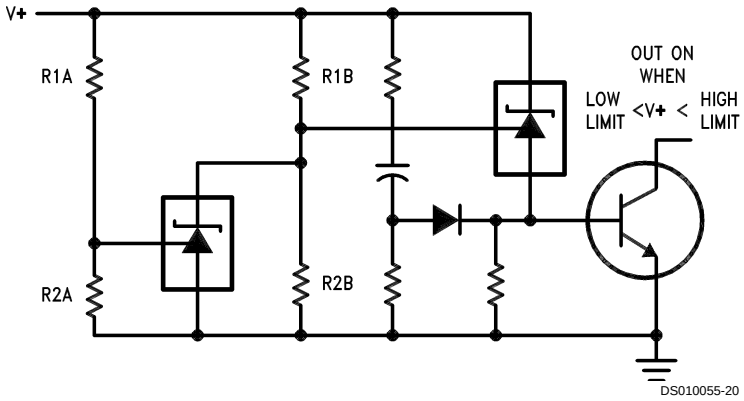

$$\text{LOW LIMIT} \approx V_{REF}\left(1 + \frac{R1B}{R2B}\right) + V_{BE}$$

$$\text{HIGH LIMIT} \approx V_{REF}\left(1 + \frac{R1A}{R2A}\right)$$

Voltage Monitor

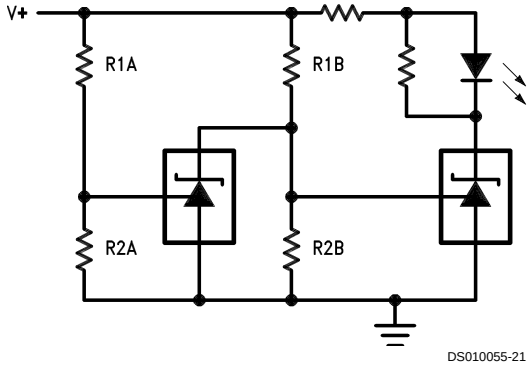

$$\text{LOW LIMIT} \approx V_{REF}\left(1 + \frac{R1B}{R2B}\right)$$

LED ON WHEN
LOW LIMIT $< V^{+} <$ HIGH LIMIT

$$\text{HIGH LIMIT} \approx V_{REF}\left(1 + \frac{R1A}{R2A}\right)$$

Typical Applications (Continued)

Delay Timer

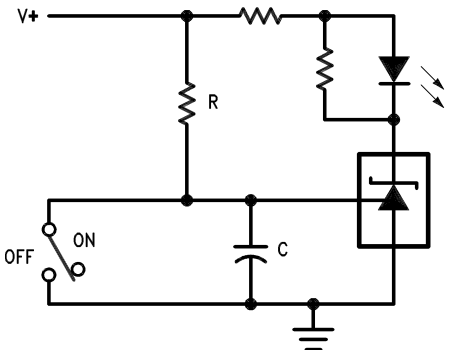

DS010055-22

$$\text{DELAY} = R \bullet C \bullet \ell n \frac{V+}{(V^{+}) - V_{REF}}$$

Current Limiter or Current Source

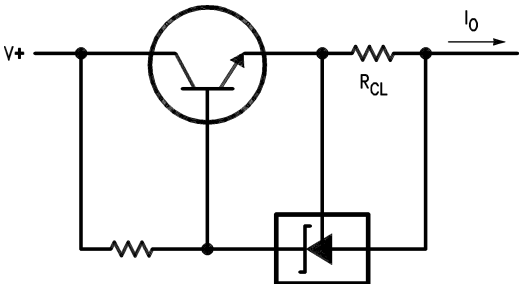

DS010055-23

$$I_O = \frac{V_{REF}}{R_{CL}}$$

Constant Current Sink

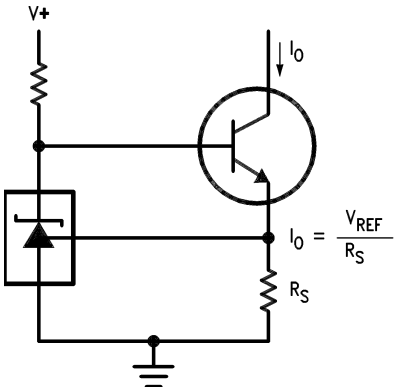

DS010055-24

Application Info

1.0 Mounting

To ensure that the geometry of the micro SMD package maintains good physical contact with the printed circuit board, pin A1 (NC) must be soldered to the pcb. Please see AN-1112 for more detailed information regarding board mounting techniques for the micro SMD package.

2.0 LM431 micro SMD Light Sensitivity

When the LM431 micro SMD package is exposed to bright sunlight, normal office fluorescent light, and other LED's and lasers, it operates within the guaranteed limits specified in the electrical characteristics table.

Physical Dimensions inches (millimeters) unless otherwise noted

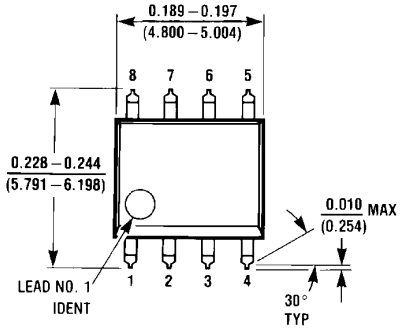

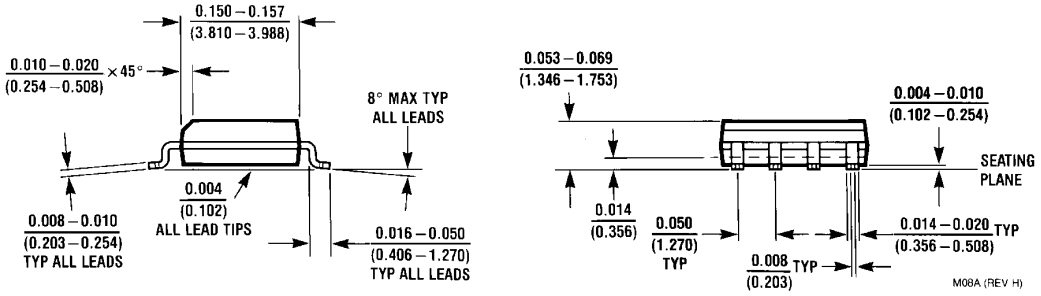

NS Package Number M08A

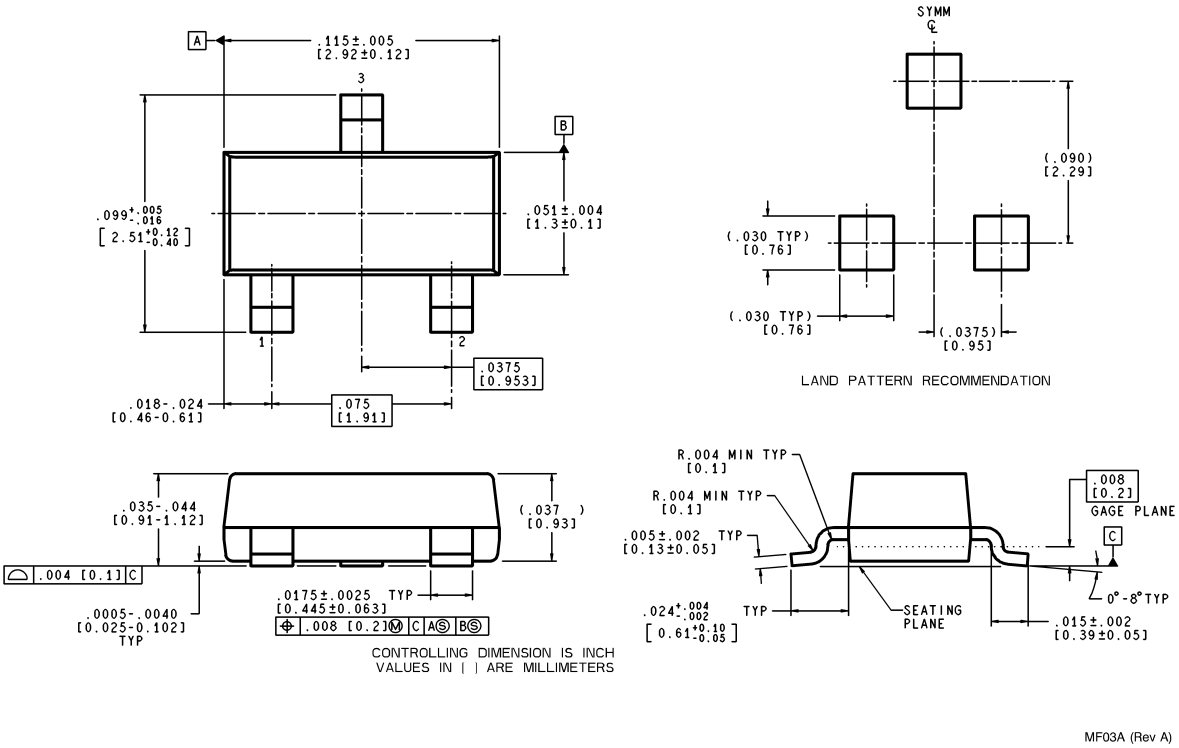

SOT-23 Molded Small Outline Transistor Package (M3)
NS Package Number MF03A

Physical Dimensions inches (millimeters) unless otherwise noted (Continued)

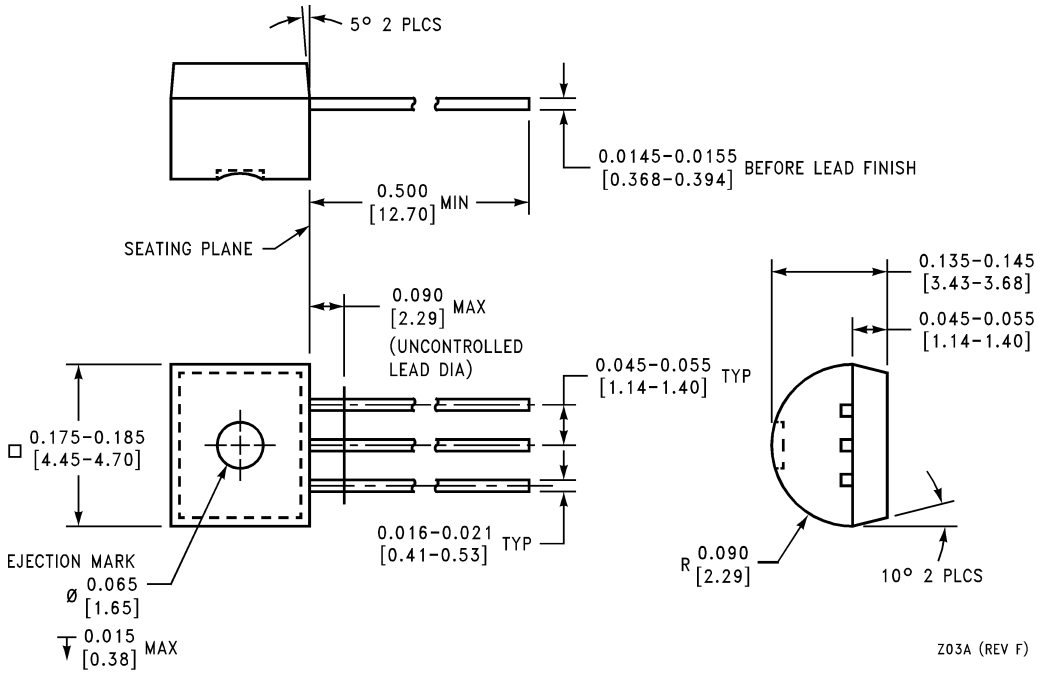

NS Package Number Z03A

Physical Dimensions inches (millimeters) unless otherwise noted (Continued)

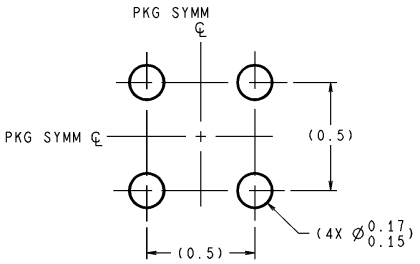

DIMENSIONS ARE IN MILLIMETERS

LAND PATTERN RECOMMENDATION

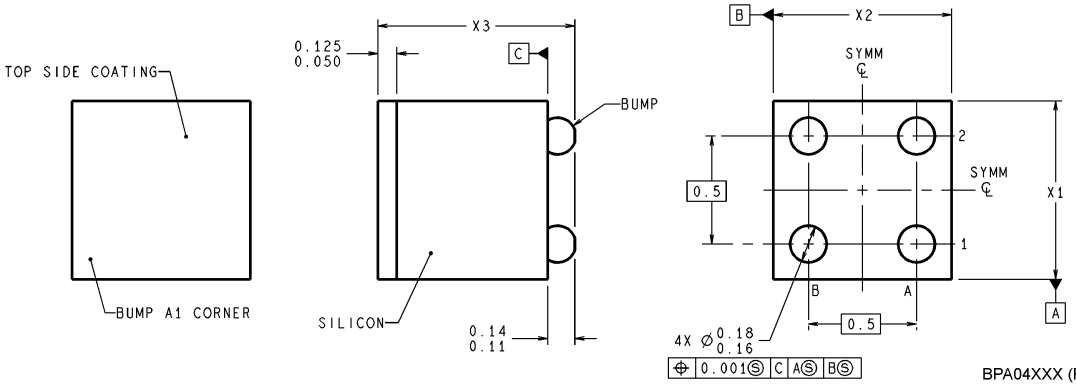

NOTES: UNLESS OTHERWISE SPECIFIED

1. EPOXY COATING
2. 63Sn/37Pb EUTECTIC BUMP
3. RECOMMEND NON-SOLDER MASK DEFINED LANDING PAD.
4. PIN A1 IS ESTABLISHED BY LOWER LEFT CORNER WITH RESPECT TO TEXT ORIENTATION. REMAINING PINS ARE NUMBERED.
5. XXX IN DRAWING NUMBER REPRESENTS PACKAGE SIZE VARIATION WHERE X1 IS PACKAGE WIDTH, X2 IS PACKAGE LENGTH AND X3 IS PACKAGE HEIGHT.
6. REFERENCE JEDEC REGISTRATION MO-211, VARIATION BA.

4-Bump micro SMD
X1 = 0.777 X2 = 0.904 X3 = 0.850
NS Package Number BPA04AFB

LIFE SUPPORT POLICY

NATIONAL'S PRODUCTS ARE NOT AUTHORIZED FOR USE AS CRITICAL COMPONENTS IN LIFE SUPPORT DEVICES OR SYSTEMS WITHOUT THE EXPRESS WRITTEN APPROVAL OF THE PRESIDENT AND GENERAL COUNSEL OF NATIONAL SEMICONDUCTOR CORPORATION. As used herein:

1. Life support devices or systems are devices or systems which, (a) are intended for surgical implant into the body, or (b) support or sustain life, and whose failure to perform when properly used in accordance with instructions for use provided in the labeling, can be reasonably expected to result in a significant injury to the user.
2. A critical component is any component of a life support device or system whose failure to perform can be reasonably expected to cause the failure of the life support device or system, or to affect its safety or effectiveness.

National Semiconductor Corporation
Americas
Email: support@nsc.com

www.national.com

National Semiconductor Europe
Fax: +49 (0) 180-530 85 86
Email: europe.support@nsc.com
Deutsch Tel: +49 (0) 69 9508 6208
English Tel: +44 (0) 870 24 0 2171
Français Tel: +33 (0) 1 41 91 8790

National Semiconductor Asia Pacific Customer Response Group
Tel: 65-2544466
Fax: 65-2504466
Email: ap.support@nsc.com

National Semiconductor Japan Ltd.
Tel: 81-3-5639-7560
Fax: 81-3-5639-7507

National does not assume any responsibility for use of any circuitry described, no circuit patent licenses are implied and National reserves the right at any time without notice to change said circuitry and specifications.

Компания «ЭлектроПласт» предлагает заключение долгосрочных отношений при поставках импортных электронных компонентов на взаимовыгодных условиях!

Наши преимущества:

- Оперативные поставки широкого спектра электронных компонентов отечественного и импортного производства напрямую от производителей и с крупнейших мировых складов;
- Поставка более 17-ти миллионов наименований электронных компонентов;
- Поставка сложных, дефицитных, либо снятых с производства позиций;
- Оперативные сроки поставки под заказ (от 5 рабочих дней);
- Экспресс доставка в любую точку России;
- Техническая поддержка проекта, помощь в подборе аналогов, поставка прототипов;
- Система менеджмента качества сертифицирована по Международному стандарту ISO 9001;
- Лицензия ФСБ на осуществление работ с использованием сведений, составляющих государственную тайну;
- Поставка специализированных компонентов (Xilinx, Altera, Analog Devices, Intersil, Interpoint, Microsemi, Aeroflex, Peregrine, Syfer, Eurofarad, Texas Instrument, Miteq, Cobham, E2V, MA-COM, Hittite, Mini-Circuits,General Dynamics и др.);

Помимо этого, одним из направлений компании «ЭлектроПласт» является направление «Источники питания». Мы предлагаем Вам помощь Конструкторского отдела:

- Подбор оптимального решения, техническое обоснование при выборе компонента;
- Подбор аналогов;
- Консультации по применению компонента;
- Поставка образцов и прототипов;
- Техническая поддержка проекта;
- Защита от снятия компонента с производства.

Как с нами связаться

Телефон: 8 (812) 309 58 32 (многоканальный)
Факс: 8 (812) 320-02-42
Электронная почта: org@eplast1.ru
Адрес: 198099, г. Санкт-Петербург, ул. Калинина, дом 2, корпус 4, литера А.