Type SBC (Square Ceramic) Series

Key Features

- Up to 17 Watts
- Fusible Styles
- Vertical or Axial
- Non Flammable
- Special Solvent Resistance
- Customer Specials Invited
- Widely Available from Distribution

This range of Power Wirewound Resistors are wound on continuous glass fibre elements or have a ceramic core depending on resistance value. The element is housed in a ceramic case and sealed with an inorganic silica filler. Their construction gives a resistor with high insulation resistance and low surface temperature, capable of withstanding high overload currents. These resistors are ideally suited to a variety of applications within industrial and commercial environments, where performance and reliability are of prime importance. Applications include fan force ovens, cooker hoods, power supplies and triac based speed controls. Custom Design Variants in value and style are welcomed.

Characteristics - Electrical

Resistance Values:	Series E24 5% E12 10% (see tables for value limits per style)
Resistance Tolerance:	±5% ±10%
Maximum Continuous Voltage:	$\sqrt{P \times R}$
Load Life:	ΔR <±3% 1000 hours at 70°C
Power Rating:	See Surface Temperature Curve (below)

Characteristics - Environmental and Mechanical

Temperature Coefficient of Resistance:	200ppm/°C (400ppm/°C below 18R)
Resistance to Solder Heat:	ΔR < 0.2% (350°C for 2.5 seconds)
Voltage Coefficient of Resistance:	Negligible
Operating Temperature Range:	-55°C to +350°C
Load Stability:	ΔR < 5% (full load at 70°C for 1000 hours)
Long Term Damp Heat:	ΔR < 0.2% (21 days at 40°C for 93% humidity)
Shelf Life:	ΔR < 1.0% (per 12 months)
Insulation Resistance:	> 10000M
Dielectric Strength:	2000V RMS
Lead Material:	Steel - Solder coat
Marking:	Legend mark, Manufacturer name, type, ohmic value and tolerance.

Surface Temperature Rise Curve

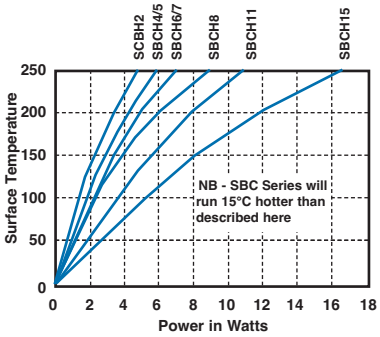

Derating Curve

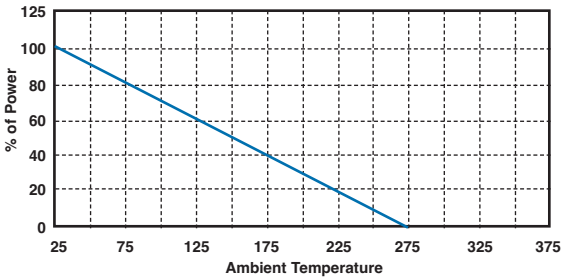

Dimensions are in millimeters and inches unless otherwise specified. Values in brackets are standard equivalents.

Dimensions are shown for reference purposes only. Specifications subject to change.

For email, phone or live chat, go to: **te.com/help**

Type SBC (Square Ceramic) Series

Type SBC - SBCH (Axial Power Resistor)

We offer three ceramic profiles for the main wattage sizes.
These are for additional heat dissipation and vertical mounting of resistors.
The suffix for each style is as follows:-

SBC Standard **SBCH 4/5/6/7** **SBCH 8/11/15**

Type SBCHE (For Vertical Mounting)

We offer SBCHE Styles with one lengthened lead for vertical mounting. See additional hardware on last page.

One Lead Length 20mm longer than case length. Supplied with one longer lead wrapped back in flute in ceramic.

Type SBC - (No Flutes in Ceramic)

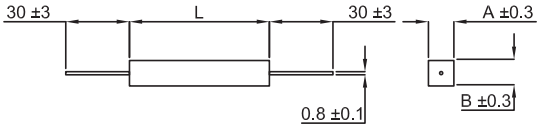

Model	Power Max	Ohmic Values		Dimensions			Weight Grams
		Min	Max	A	B	L	
SBC-2	4 W	R20	6K8	6.4	6.4	20	2.3
SBC-4	5 W	R30	10K	6.4	6.4	25	2.9
SBC-6	7 W	R47	22K	6.4	6.4	38	4.2
SBC-8	9 W	1R0	8K2	9	9	38	7.4
SBC-11	11 W	1R0	22K	9	9	50	10.8
SBC-15	17 W	1R0	22K	9	9	75	15.3

Type SBCH - (Flutes in Ceramic)

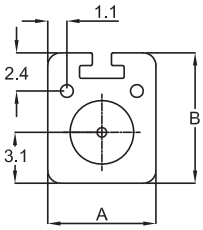

SBCH - 4, 5, 6

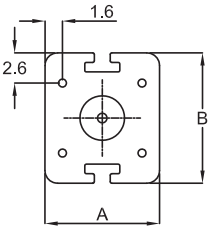

SBCH - 7, 8, 11, 15

Model	Power Max	Ohmic Values		Dimensions			Weight Grams
		Min	Max	A	B	L	
SBCH-4	4 W	R20	6K8	7	8	20	2.2
SBCH-5	5 W	R30	10K	7	8	25	3.5
SBCH-6	7 W	R47	22K	7	8	38	5.0
SBCH-7	7 W	R33	10K	9	10	25	6.0
SBCH-8	9 W	1R0	8K2	9	10	38	8.0
SBCH-11	11 W	1R0	22K	9	10	50	10.0
SBCH-15	17 W	1R0	22K	9	10	75	15.0

L = Length of Ceramic Section

Type SBCLF - (Externally Fused Style)

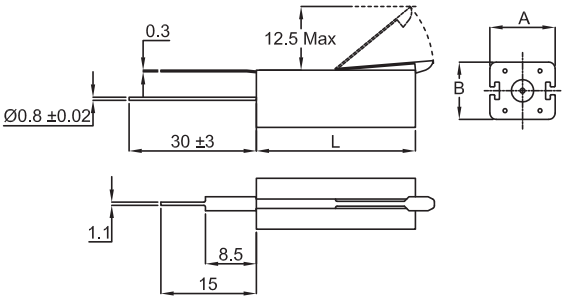

Model	Power Max	Ohmic Values		Dimensions		
		Min	Max	A	B	L
SBCLF-4	4 W	2R2	2K2	10	9	25
SBCLF-5	5.5 W	2R2	5K6	10	9	38
SBCLF-7	7 W	3R3	8K2	10	9	50
SBCLF-10	10 W	4R7	12K	10	9	75

Solder for fuse is SnPb 60:40

Dimensions are in millimeters and inches unless otherwise specified. Values in brackets are standard equivalents.

Dimensions are shown for reference purposes only. Specifications subject to change.

For email, phone or live chat, go to: **te.com/help**

Type SBC (Square Ceramic) Series

Type SBCV - (Vertical Mount Style)

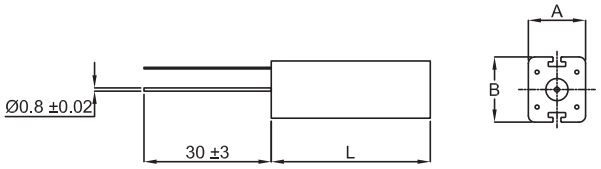

Model	Power Max	Ohmic Values		Dimensions		
		Min	Max	A	B	L
SBCV-6	7 W	R47	22K	9	10	25
SBCV-8	9 W	1R0	8K2	9	10	38
SBCV-11	11 W	1R0	22K	9	10	50
SBCV-15	17 W	1R0	22K	9	10	75

Lead drawn through hole in ceramic

Accessories

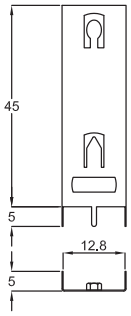

This device is used with models SBCV.

Order LC1 Support.

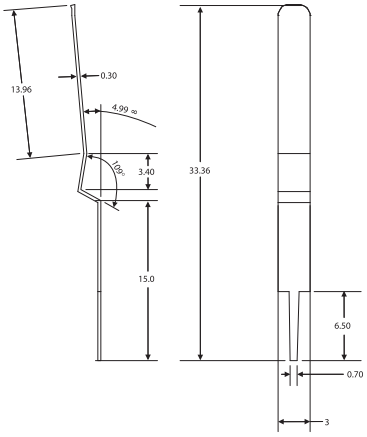

These can be used with SBCH/SBCV models.

Order BCV Support Pillar.

How to Order

SBCH	6	1K0	J
Common Part	**Size**	**Resistance Value**	**Tolerance**
SBCH - Axial SBCV - Vertical SBCLF - Vertical Fusible SBCHE - Axial / Vertical One Long Lead	See Relevant Table	0.2 Ohm (200 milli Ohms) R20 1 Ohm (1000 milli Ohms) 1R0 1K Ohm (1000 Ohms) 1K0	J - ±5% K - ±10%

N.B. All resistors are supplied with arklone proof seal

TE Connectivity, TE connectivity (logo) and TE (logo) are trademarks.
Other logos, product and Company names mentioned herein may be trademarks of their respective owners.

While TE has made every reasonable effort to ensure the accuracy of the information in this datasheet, TE does not guarantee that it is error-free, nor does TE make any other representation, warranty or guarantee that the information is accurate, correct, reliable or current. TE reserves the right to make any adjustments to the information contained herein at any time without notice. TE expressly disclaims all implied warranties regarding the information contained herein, including, but not limited to, any implied warranties of merchantability or fitness for a particular purpose. The dimensions in this datasheet are for reference purposes only and are subject to change without notice. Specifications are subject to change without notice. Consult TE for the latest dimensions and design specifications.

Компания «ЭлектроПласт» предлагает заключение долгосрочных отношений при поставках импортных электронных компонентов на взаимовыгодных условиях!

Наши преимущества:

- Оперативные поставки широкого спектра электронных компонентов отечественного и импортного производства напрямую от производителей и с крупнейших мировых складов;
- Поставка более 17-ти миллионов наименований электронных компонентов;
- Поставка сложных, дефицитных, либо снятых с производства позиций;
- Оперативные сроки поставки под заказ (от 5 рабочих дней);
- Экспресс доставка в любую точку России;
- Техническая поддержка проекта, помощь в подборе аналогов, поставка прототипов;
- Система менеджмента качества сертифицирована по Международному стандарту ISO 9001;
- Лицензия ФСБ на осуществление работ с использованием сведений, составляющих государственную тайну;
- Поставка специализированных компонентов (Xilinx, Altera, Analog Devices, Intersil, Interpoint, Microsemi, Aeroflex, Peregrine, Syfer, Eurofarad, Texas Instrument, Miteq, Cobham, E2V, MA-COM, Hittite, Mini-Circuits,General Dynamics и др.);

Помимо этого, одним из направлений компании «ЭлектроПласт» является направление «Источники питания». Мы предлагаем Вам помощь Конструкторского отдела:

- Подбор оптимального решения, техническое обоснование при выборе компонента;
- Подбор аналогов;
- Консультации по применению компонента;
- Поставка образцов и прототипов;
- Техническая поддержка проекта;
- Защита от снятия компонента с производства.

Как с нами связаться

Телефон: 8 (812) 309 58 32 (многоканальный)
Факс: 8 (812) 320-02-42
Электронная почта: org@eplast1.ru
Адрес: 198099, г. Санкт-Петербург, ул. Калинина, дом 2, корпус 4, литера А.