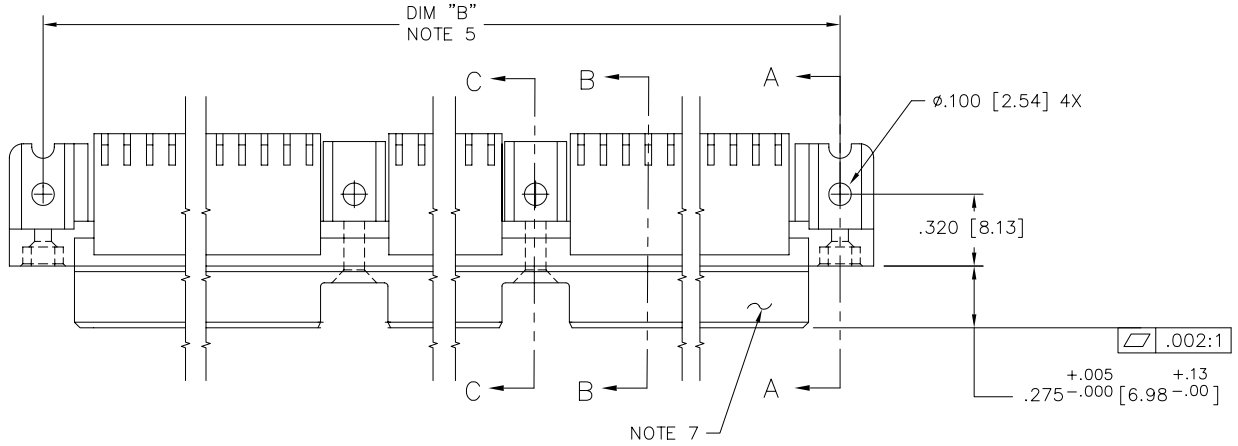
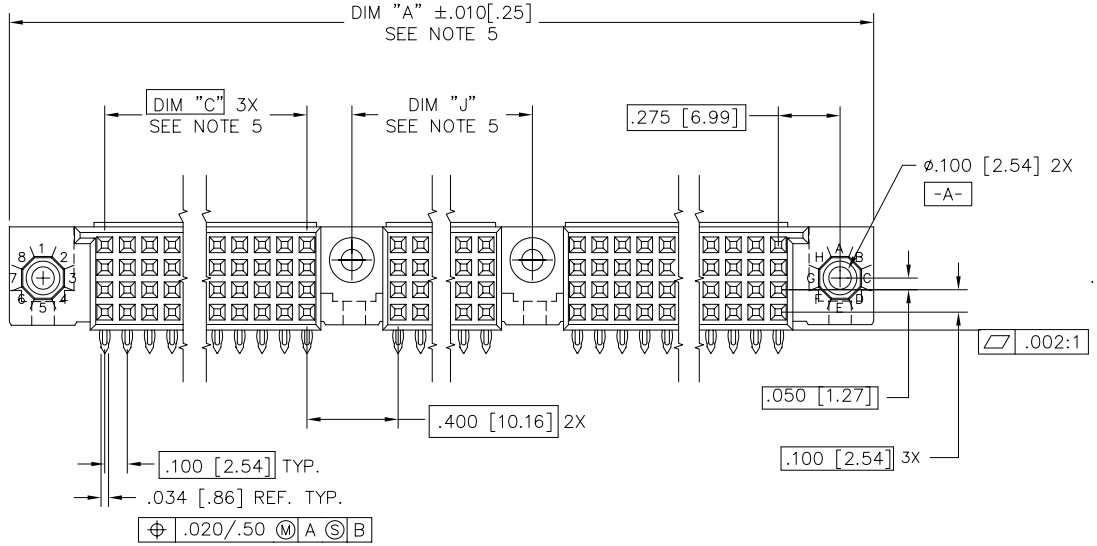
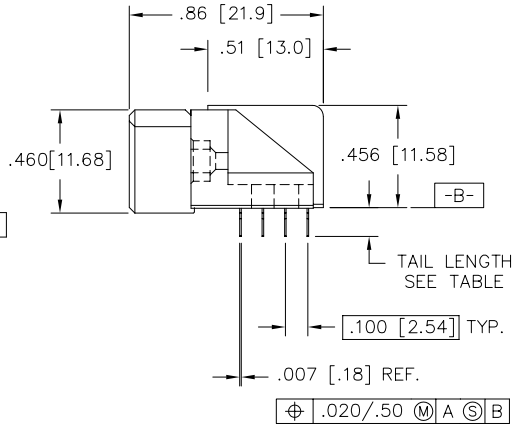
PRODUCT NUMBER
SEE TABLE







mat'l. code	surface	tolerance	projection	product family
SEE NOTE 3	ISO 1302	ISO 406 ISO 1101		HPC

ltr	ecn no	dr	date
N	V10820	JRW	2/1/01
P	V10947	CGD	2/28/01
R	V10960	MEM	3/14/01
S	V05-0512	DAI	8/01/05
T	V05-1054	HTB	11/16/05
U	M06-0283	MHT	7/27/06
V	M07-0099	AGS	2/08/07

tolerances unless otherwise specified
angles 0°±2°
linear .XX±.01/.3 .XXX±.005/.13 .XXXX±.0020/.051
INCH/MM
scale 1:1

dr	G.PETERS	6/12/93
engr	S.CLARK	6/12/93
chr	S.CLARK	6/12/93
appd	S.CLARK	6/12/93

title: 4 ROW R/A RECEPTACLE PRESS FIT, 2 GUIDE PINS
dwg no 50644 sheet 1 of 6 size A3
type Product Customer Drawing

sheet index	revision																							
	sheet	1	2	3	4	5	6																	

FCIconnect.com
Copyright FCI

form: A3

PDM: Rev:V STATUS: Released Printed: May 14, 2011

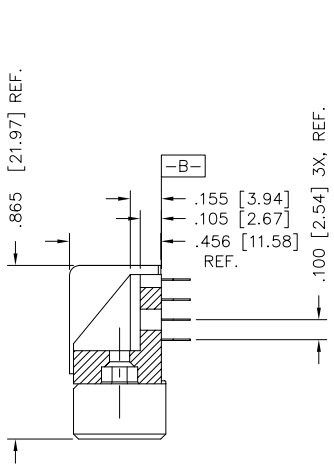
PRODUCT NUMBER
SEE TABLE

NOTES:

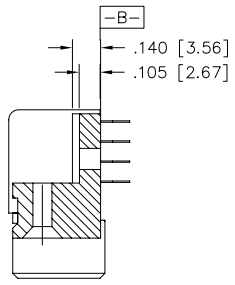
1. PRODUCT NUMBERING CODE:
   50644 – X YYY Z S LF
   - LF — LEAD FREE (OPTIONAL)
   - S — SPECIAL FEATURES (NOTE 10)
   - Z — TAIL LENGTH (SEE TABLE)
   - YYY — NO. OF POSITIONS (NOTE 2)
   - X — PLATING SEE TABLE
   - 50644 — BASE NUMBER

   PRODUCT NUMBERING CODE FOR SELECT LOAD
   50644– XX YYY LF
   - LF — LEAD FREE (OPTIONAL)
   - YYY — SEQUENCE NUMBER
   - XX — ALWAYS "XX"
   - 50644 — BASE NUMBER

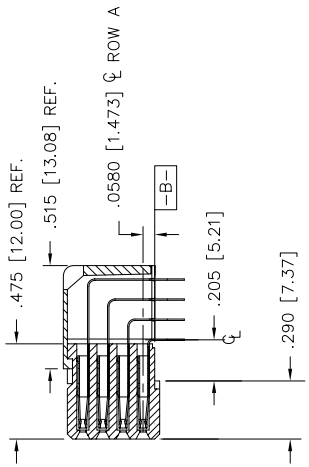
2. THIS PRODUCT IS CONFIGURED IN SIZES OF 30 thru 150 COLUMNS IN INCREMENTS OF THREE.
   i.e.: 30,33,36,.....147,150.
3. MATERIAL PRESS BLOCK: HIGH TEMP. THERMOPLASTIC
   MATERIAL HOUSING: GLASS AND MINERAL FILLED HIGH TEMP. THERMOPLASTIC. FLAME RETARDANT PER UL94V–0. COLOR: BLACK.
   CONTACT MATERIAL: BeCu.
4. PLATING:
   CONTACT AREA – SEE PRODUCT NUMBER TABLE
   TAILS–EITHER TIN OR TIN LEAD, SEE PRODUCT NUMBER TABLE
5. DIMENSION "A" CALCULATION = .100 (2.54) X NO. OF COLUMNS + 1.35[34.3]
   DIMENSION "B" CALCULATION = .100 (2.54) X NO. OF COLUMNS + 1.050[26.67]
   DIMENSION "C" CALCULATION = .100 (2.54) X NO. OF COLUMNS – DIVDED BY 3 – .100[2.54]
   DIMENSION "J" CALCULATION = .100 (2.54) X NO. OF COLUMNS – DIVDED BY 3 + .300[7.62]
6. DRILLED HOLE DIA. OF .0453±.001 FINISHED TO .0400±.0030 BY PLATING SnPb(60/40), .0003 – .0006 w/Cu UNDERPLATING AS NEEDED.
7. MANUFACTURE'S LOGO, P/N, AND LOT CODE TO APPEAR ON THIS SURFACE.
8. THIS HOUSING WILL WITHSTAND EXPOSURE TO 260°C PEAK TEMPERTURE FOR 10–30 SECONDS IN A CONVECTION, INFRA–RED OR VAPOR PHASE REFLOW OVEN.
9. FOR PCB STAY AWAY ZONE SEE TA–0954.
10. SPECIAL FEATURES:
    - _ = IF NO SPECIAL FEATURE CODE IS SELECTED, CONNECTOR WILL APPEAR AS SHOWN. PCB MOUNTING HOLE DIMENSION TO BE ø.120±.003 [3.05±0.07]
    - "A" = IF SPECIFIED, CONNECTOR WILL APPEAR AS SHOWN ON SHEET 3. PCB MOUNTING HOLE DIMENSION TO BE ø.100±.003 [2.54±0.07].
    - "B" = IF SPECIFIED, CONNECTOR WILL HAVE PRE–INSTALLED EYELET FOR P.C.B. ATTACHMENT IN A ø.100±.003 [2.54±0.07] MOUNTING HOLE. SEE SHEET 3. (AVAILABLE IN "E" TAIL LENGTH. ONLY).
    - "C" = IF SPECIFIED, CONNECTOR WILL HAVE PRE–INSTALLED EYELET FOR P.C.B. ATTACHMENT IN A ø.120±.003 [2.54±0.07] MOUNTING HOLE. SEE SHEET 3.
    - "D" = IF SPECIFIED, CONNECTOR WILL HAVE PRE–INSTALLED EYELET WITH MOLDED GUIDE PINS FOR P.C.B. ATTACHMENT IN A ø.120±.003 [2.54±0.07] MOUNTING HOLE. SEE SHEET 3.
11. THIS PRODUCT (WITH "LF" SUFFIX) MEETS EUROPEAN UNION DIRECTIVES AND OTHER COUNTRY REGULATIONS AS DESCRIBED IN GS–22–008.



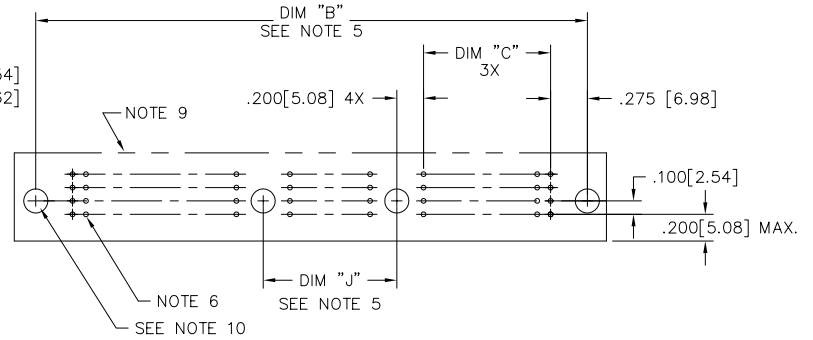
SECTION A–A



SECTION C–C



SECTION B–B

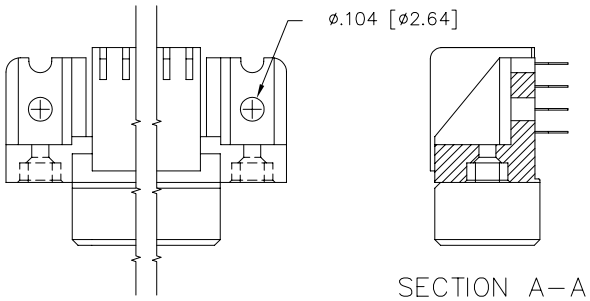


RECOMMENDED PCB LAYOUT

(ALL HOLES LOCATED ON .100 [2.54] GRID UNLESS OTHERWISE SHOWN)

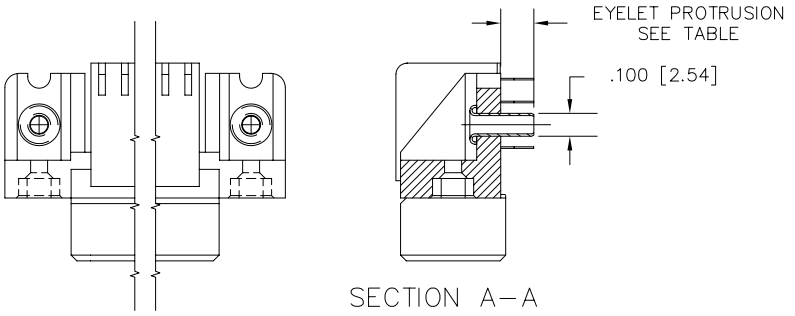
| | | |

PRODUCT NUMBER
SEE TABLE



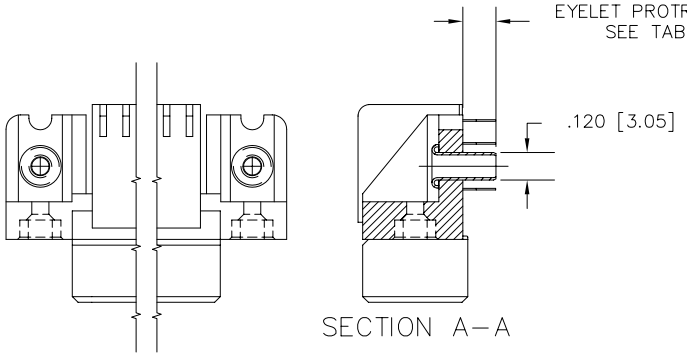
SECTION A–A

SPECIAL FEATURE OPTION A



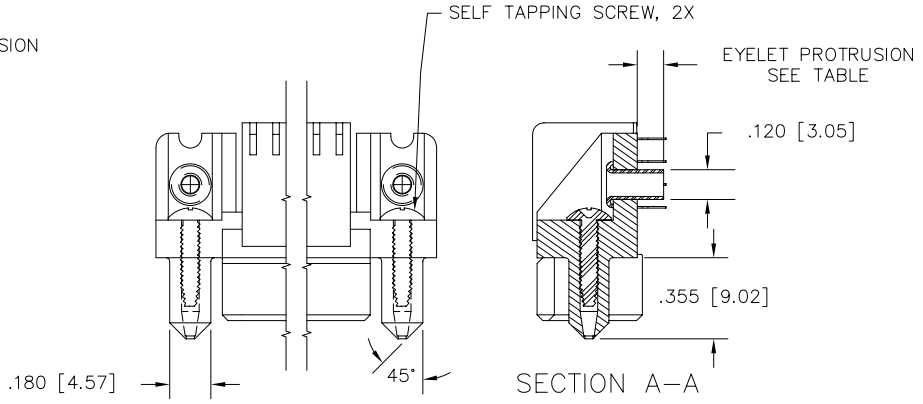
SECTION A–A

SPECIAL FEATURE OPTION B



SECTION A–A

SPECIAL FEATURE OPTION C



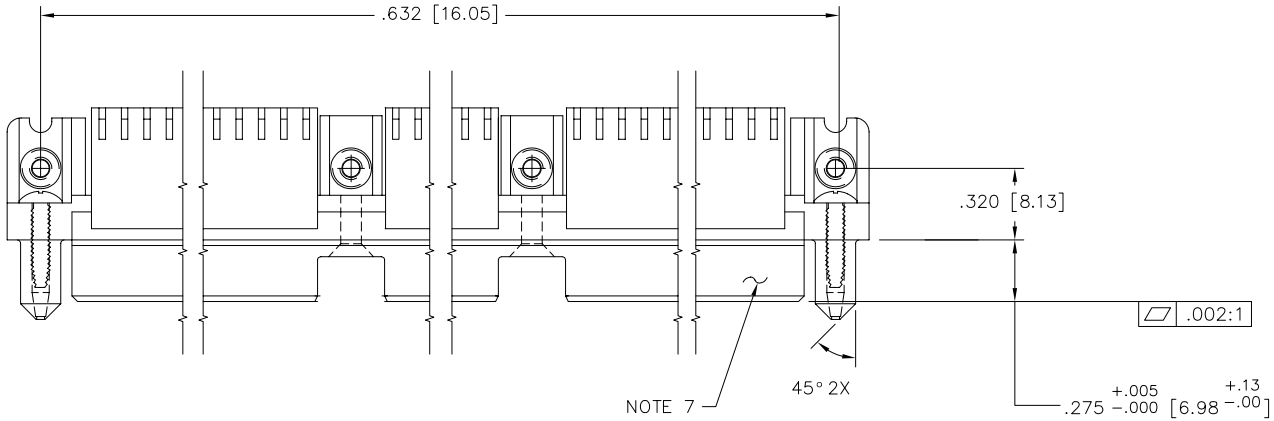
SECTION A–A

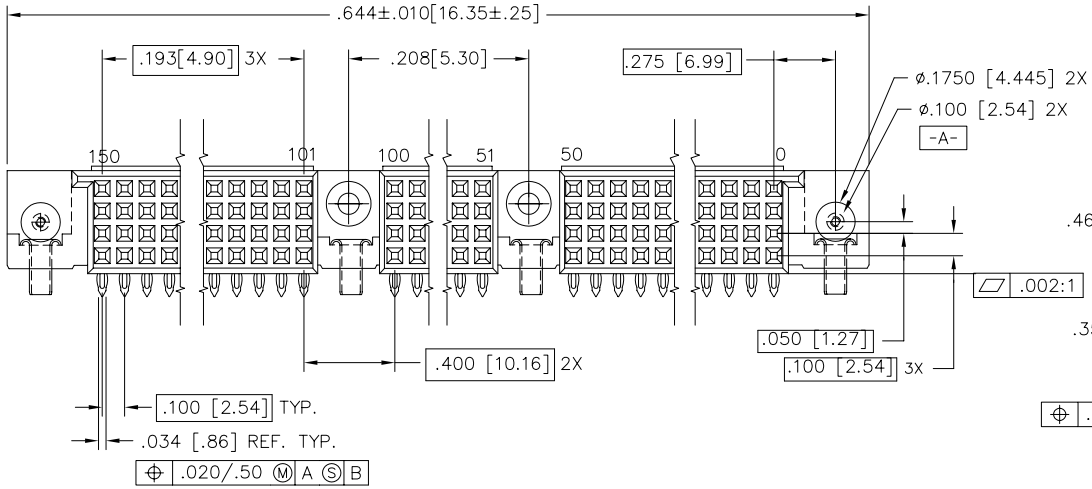
SPECIAL FEATURE OPTION D

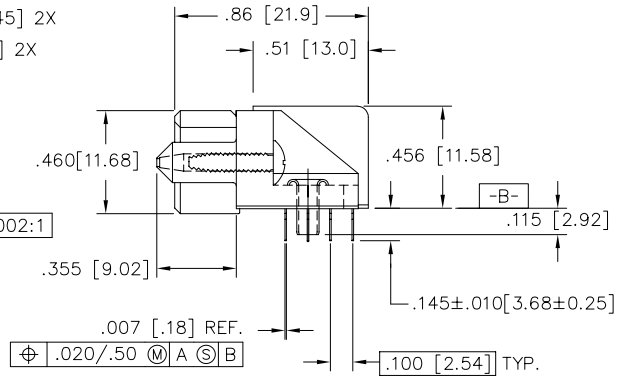
| | | |

PRODUCT NUMBER
50644-XX001
50644-XX001LF

50644-XX001 AND 50644-XX001LF ONLY







NOTES FOR −XX001 AND XX001LF ONLY:

1. ALL POSITIONS LOADED WITH .145[3.68] TAIL LENGTH.
2. SIZE 4 x 150
   TOTAL NUMBER OF POSITIONS – 600
   TOTAL NUMBER OF POSITIONS LOADED – 600

ltr	ecn no	dr	date
V			

mat'l. code	SEE NOTE 3	
surface	ISO 1302	
tolerance	ISO 406 ISO 1101	
tolerances unless otherwise specified		
angles	0°±2°	
linear	.XX±.01/.3 / .XXX±.005/.13 / .XXXX±.0020/.051	
projection		
INCH/MM		
scale	1:1	
dr	G.PETERS	6/12/93
engr	S.CLARK	6/12/93
chr	S.CLARK	6/12/93
appd	S.CLARK	6/12/93
product family	HPC	
title	4 ROW R/A RECEPTACLE PRESS FIT, 2 GUIDE PINS	
dwg no	50644	
sheet	4 of 6	
size	A3	
type	Product Customer Drawing	

sheet index	revision sheet

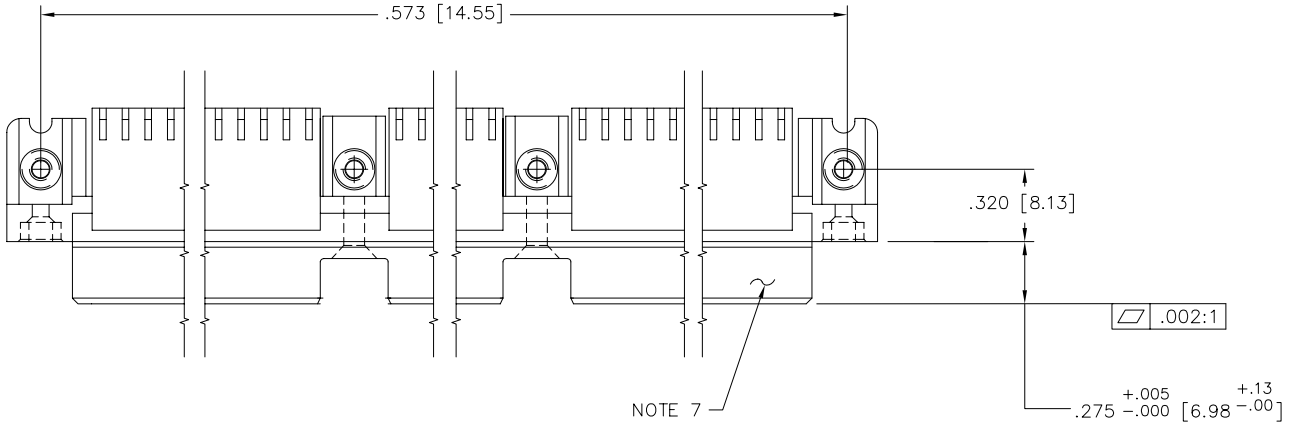
form: A3

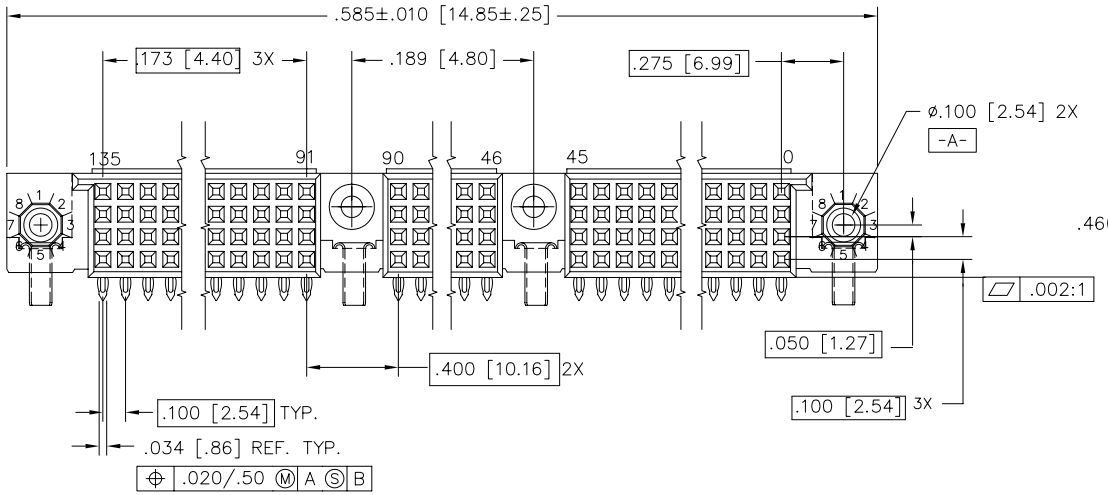
FCIconnect.com
Copyright FCI

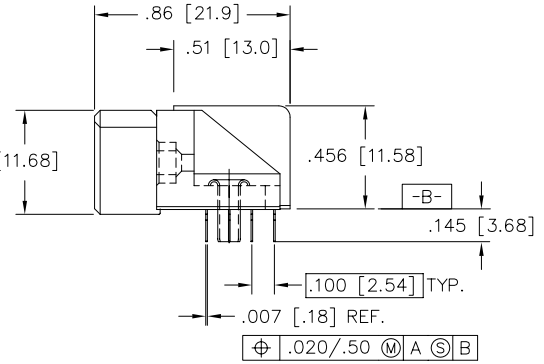
PDM: Rev:V STATUS: Released Printed: May 14, 2011

PRODUCT NUMBER
50644-XX002
50644-XX002LF

50644-XX002 AND 50644-XX002LF ONLY







NOTES FOR −XX002 AND XX002LF ONLY:

1. ALL POSITIONS LOADED WITH .145[3.68] TAIL LENGTH.
2. SIZE 4 x 135
   TOTAL NUMBER OF POSITIONS − 540
   TOTAL NUMBER OF POSITIONS LOADED − 540

mat'l. code				surface ISO 1302	tolerance ISO 406 ISO 1101	projection	product family HPC
ltr	ecn no	dr	date	tolerances unless otherwise specified			title
V				angles 0°±2°	linear .XX±.01/.3 .XXX±.005/.13 .XXXX±.0020/.051	INCH/MM scale 1:1	4 ROW R/A RECEPTACLE PRESS FIT, 2 GUIDE PINS
				dr G.PETERS 6/12/93			dwg no 50644 sheet 5 of 6 size A3
				engr S.CLARK 6/12/93			
				chr S.CLARK 6/12/93			type Product Customer Drawing
				appd S.CLARK 6/12/93			
sheet index	revision sheet						

FCIconnect.com
Copyright FCI

form: A3

PDM: Rev:V STATUS: Released Printed: May 14, 2011

PRODUCT NUMBER NOTE 1	NUMBER OF POSITIONS NOTE 2	TAIL LENGTH ±.010/0.25	SPECIAL FEATURES SEE NOTE 10	SOLDER TAIL PLATING	PLATING IN CONTACT AREA	EYELET PROTRUSION
50644 –1YYYE	YYY	.125/3.18	NONE	TIN–LEAD	30u"/.76u Au	N/A
50644 –5YYYELF	YYY	.125/3.18	NONE	TIN	30u"/.76u GXT	N/A
50644 –1YYYEA	YYY	.125/3.18	"A"	TIN–LEAD	30u"/.76u Au	N/A
50644 –5YYYEALF	YYY	.125/3.18	"A"	TIN	30u"/.76u GXT	N/A
50644 –1YYYEB	YYY	.125/3.18	"B"	TIN–LEAD	30u"/.76u Au	0.145/3.68
50644 –5YYYEBLF	YYY	.125/3.18	"B"	TIN	30u"/.76u GXT	0.145/3.68
50644 –1YYYEC	YYY	.125/3.18	"C"	TIN–LEAD	30u"/.76u Au	0.115/2.92
50644 –5YYYECLF	YYY	.125/3.18	"C"	TIN	30u"/.76u GXT	0.115/2.92
50644 –1YYYED	YYY	.125/3.18	"D"	TIN–LEAD	30u"/.76u Au	0.115/2.92
50644 –5YYYEDLF	YYY	.125/3.18	"D"	TIN	30u"/.76u GXT	0.115/2.92
50644 –1YYYF	YYY	.145/3.68	NONE	TIN–LEAD	30u"/.76u Au	N/A
50644 –5YYYFLF	YYY	.145/3.68	NONE	TIN	30u"/.76u GXT	N/A
50644 –1YYYFA	YYY	.145/3.68	"A"	TIN–LEAD	30u"/.76u Au	N/A
50644 –5YYYFALF	YYY	.145/3.68	"A"	TIN	30u"/.76u GXT	N/A
50644 –1YYYFC	YYY	.145/3.68	"C"	TIN–LEAD	30u"/.76u Au	0.145/3.68
50644 –5YYYFCLF	YYY	.145/3.68	"C"	TIN	30u"/.76u GXT	0.145/3.68
50644 –1YYYFD	YYY	.145/3.68	"D"	TIN–LEAD	30u"/.76u Au	0.145/3.68
50644 –5YYYFDLF	YYY	.145/3.68	"D"	TIN	30u"/.76u GXT	0.145/3.68
50644 –XX001	600	.145/3.68	"D"	TIN–LEAD	30u"/.76u Au	0.115/2.92
50644 –XX001LF	600	.145/3.68	"D"	TIN	30u"/.76u GXT	0.115/2.92
50644 –XX002	540	.145/3.68	"B"	TIN–LEAD	30u"/.76u Au	0.145/3.68
50644 –XX002LF	540	.145/3.68	"B"	TIN	30u"/.76u GXT	0.145/3.68
50644 –1YYYELF	YYY	.125/3.18	NONE	TIN	30u"/.76u Au	N/A
50644 –1YYYEALF	YYY	.125/3.18	"A"	TIN	30u"/.76u Au	N/A
50644 –1YYYEBLF	YYY	.125/3.18	"B"	TIN	30u"/.76u Au	0.145/3.68
50644 –1YYYECLF	YYY	.125/3.18	"C"	TIN	30u"/.76u Au	0.115/2.92
50644 –1YYYEDLF	YYY	.125/3.18	"D"	TIN	30u"/.76u Au	0.115/2.92
50644 –1YYYFLF	YYY	.145/3.68	NONE	TIN	30u"/.76u Au	N/A
50644 –1YYYFALF	YYY	.145/3.68	"A"	TIN	30u"/.76u Au	N/A
50644 –1YYYFCLF	YYY	.145/3.68	"C"	TIN	30u"/.76u Au	0.145/3.68
50644 –1YYYFDLF	YYY	.145/3.68	"D"	TIN	30u"/.76u Au	0.145/3.68

FCIconnect.com

Copyright FCI

mat'l. code

surface ISO 1302

tolerance ISO 406 ISO 1101

tolerances unless otherwise specified

angles 0°±2°

linear .XX±.01/.3 .XXX±.005/.13 .XXXX±.0020/.051

projection

INCH/MM

scale 1:1

ltr	ecn no	dr	date
V			

dr	G.PETERS	6/12/93
engr	S.CLARK	6/12/93
chr	S.CLARK	6/12/93
appd	S.CLARK	6/12/93

sheet index | revision sheet

product family: HPC

title: 4 ROW R/A RECEPTACLE PRESS FIT, 2 GUIDE PINS

dwg no: 50644 sheet 6 of 6 size A3

type: Product Customer Drawing

form: A3

PDM: Rev:V STATUS: Released Printed: May 14, 2011

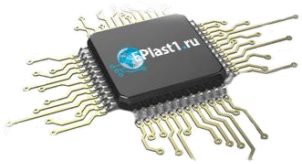
Компания «ЭлектроПласт» предлагает заключение долгосрочных отношений при поставках импортных электронных компонентов на взаимовыгодных условиях!

Наши преимущества:

- Оперативные поставки широкого спектра электронных компонентов отечественного и импортного производства напрямую от производителей и с крупнейших мировых складов;
- Поставка более 17-ти миллионов наименований электронных компонентов;
- Поставка сложных, дефицитных, либо снятых с производства позиций;
- Оперативные сроки поставки под заказ (от 5 рабочих дней);
- Экспресс доставка в любую точку России;
- Техническая поддержка проекта, помощь в подборе аналогов, поставка прототипов;
- Система менеджмента качества сертифицирована по Международному стандарту ISO 9001;
- Лицензия ФСБ на осуществление работ с использованием сведений, составляющих государственную тайну;
- Поставка специализированных компонентов (Xilinx, Altera, Analog Devices, Intersil, Interpoint, Microsemi, Aeroflex, Peregrine, Syfer, Eurofarad, Texas Instrument, Miteq, Cobham, E2V, MA-COM, Hittite, Mini-Circuits,General Dynamics и др.);

Помимо этого, одним из направлений компании «ЭлектроПласт» является направление «Источники питания». Мы предлагаем Вам помощь Конструкторского отдела:

- Подбор оптимального решения, техническое обоснование при выборе компонента;
- Подбор аналогов;
- Консультации по применению компонента;
- Поставка образцов и прототипов;
- Техническая поддержка проекта;
- Защита от снятия компонента с производства.



Как с нами связаться

Телефон: 8 (812) 309 58 32 (многоканальный)
Факс: 8 (812) 320-02-42
Электронная почта: org@eplast1.ru
Адрес: 198099, г. Санкт-Петербург, ул. Калинина, дом 2, корпус 4, литера А.