# Model 3255A Accelerometer

## PC Board Mountable Accelerometer
## Amplified Output
## Temperature Compensated
## High Over-Range Protection

**The Model 3255A** is a signal conditioned board mountable MEMS accelerometer available in ±25g to ±500g ranges. The package can be mounted in one of two orientations, allowing the measurement axis to be either parallel or perpendicular to the mounting surface without the use of costly brackets. The accelerometer incorporates integral temperature compensation and offers a flat frequency response from DC to 1500Hz.

## dimensions

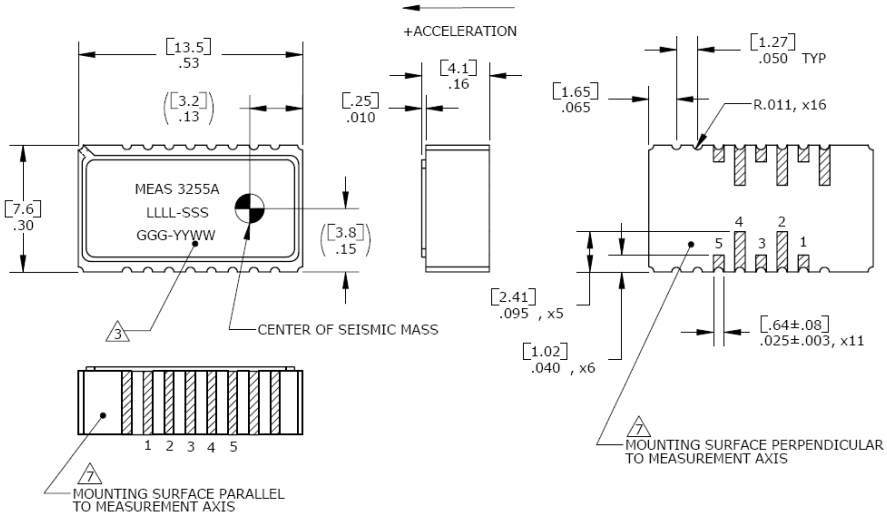


## FEATURES

- ±25g to ±500g Ranges
- Three Axis Mounting Options
- Surface Mount Package
- DC Response, Gas Damping
- Hermetically Sealed
- 5Vdc Excitation

## APPLICATIONS

- Impact & Shock Testing
- Vibration & Shock Monitoring
- Embedded Applications
- Transportation Measurements

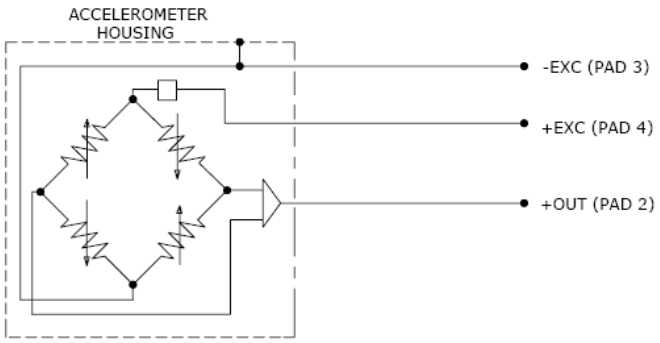


**US Patents 5,103,667; 5,253,510; 5,445,006; 5,503,016; and 5,616,863 apply**



32 Journey Ste. 150 Aliso Viejo, CA 92656 949-716-5377 t&m@meas-spec.com

# Model 3255A Accelerometer

## performance specifications

All values are typical at +24°C, 100Hz and 5Vdc excitation unless otherwise stated. Measurement Specialties reserves the right to update and change these specifications without notice. Standard product parameters are described in PSC-1002 for Embedded DC Accelerometers.

| Parameters | | | | | | |
|---|---|---|---|---|---|---|
| **DYNAMIC** | | | | | | **Notes** |
| Range (g) | ±25 | ±50 | ±100 | ±250 | ±500 | |
| Sensitivity (mV/g) ±10% | 80.0 | 40.0 | 20.0 | 8.0 | 4.0 | @5Vdc Excitation[1] |
| Frequency Response (Hz) | 0-800 | 0-1000 | 0-1200 | 0-1500 | 0-1500 | ±5% |
| Natural Frequency (Hz) | 4000 | 4000 | 6000 | 8000 | 10000 | |
| Non-Linearity (%FSO) | ±0.5 | ±0.5 | ±0.5 | ±0.5 | ±0.5 | |
| Transverse Sensitivity (%) | <3 | <3 | <3 | <3 | <3 | <1 Typical |
| Damping Ratio | 0.7 | 0.7 | 0.7 | 0.6 | 0.5 | Typical |
| Shock Limit (g) | 5000 | 5000 | 5000 | 5000 | 5000 | |
| **ELECTRICAL** | | | | | | |
| Zero Acceleration Output (V) | 2.5±0.10 | 2.5±0.10 | 2.5±0.10 | 2.5±0.10 | 2.5±0.10 | Single-Ended |
| Excitation Voltage (Vdc)[1] | 2.7 to 5.5 | 2.7 to 5.5 | 2.7 to 5.5 | 2.7 to 5.5 | 2.7 to 5.5 | |
| Excitation Current (mA) | <5 | <5 | <5 | <5 | <5 | |
| Bias Voltage (Vdc) | 2.5 | 2.5 | 2.5 | 2.5 | 2.5 | |
| Full Scale Output Voltage (Vdc) | ±2.0 | ±2.0 | ±2.0 | ±2.0 | ±2.0 | |
| Output Impedance (Ω) | <100 | <100 | <100 | <100 | <100 | |
| Insulation Resistance (MΩ) | >100 | >100 | >100 | >100 | >100 | @100Vdc |
| Residual Noise (μV RMS) | 800 | 400 | 400 | 400 | 400 | Passband |
| Ground Isolation | Isolated from Mounting Surface | | | | | |
| **ENVIRONMENTAL** | | | | | | |
| Thermal Zero Shift (%FSO/°C) | ±0.018 | ±0.018 | ±0.018 | ±0.018 | ±0.018 | |
| Thermal Sensitivity Shift (%/°C) | ±0.021 | ±0.021 | ±0.021 | ±0.021 | ±0.021 | |
| Operating Temperature (°C) | -54 to +121 | | | | | |
| Compensated Temperature (°C) | -20 to +85 | | | | | |
| Storage Temperature (°C) | -54 to +121 | | | | | |
| **PHYSICAL** | | | | | | |
| Case Material | Ceramic | | | | | |
| Weight (grams) | 1.5 | | | | | |
| Mounting | Solder | | | | | |

[1]Output is ratiometric with excitation voltage.

[2]Do not electrically connect undesignated pads in sensor application. Except pad 5 may be tied to pad 4 without affecting performance.

[3]Maximum ratings without damage:

- Excitation voltage: +5.5Vdc
- ESD protection: 4kV
- Solder reflow temperature: +260°C (10 seconds)

[4]Adhesive underfill suggested for high-g applications.

**Calibration supplied:** CS-SENS-0100 NIST Traceable Amplitude Calibration at 100Hz

The information in this sheet has been carefully reviewed and is believed to be accurate; however, no responsibility is assumed for inaccuracies. Furthermore, this information does not convey to the purchaser of such devices any license under the patent rights to the manufacturer. Measurement Specialties, Inc. reserves the right to make changes without further notice to any product herein. Measurement Specialties, Inc. makes no warranty, representation or guarantee regarding the suitability of its product for any particular purpose, nor does Measurement Specialties, Inc. assume any liability arising out of the application or use of any product or circuit and specifically disclaims any and all liability, including without limitation consequential or incidental damages. Typical parameters can and do vary in different applications. All operating parameters must be validated for each customer application by customer's technical experts. Measurement Specialties, Inc. does not convey any license under its patent rights nor the rights of others.

## ordering info

PART NUMBERING Model Number+Range

3255A-GGG
|
|_____Range (050 is 50 g)

Example: 3255A-050
Model 3255A, 50g



32 Journey Ste. 150 Aliso Viejo, CA 92656 949-716-5377 t&m@meas-spec.com

Компания «ЭлектроПласт» предлагает заключение долгосрочных отношений при поставках импортных электронных компонентов на взаимовыгодных условиях!

Наши преимущества:

- Оперативные поставки широкого спектра электронных компонентов отечественного и импортного производства напрямую от производителей и с крупнейших мировых складов;
- Поставка более 17-ти миллионов наименований электронных компонентов;
- Поставка сложных, дефицитных, либо снятых с производства позиций;
- Оперативные сроки поставки под заказ (от 5 рабочих дней);
- Экспресс доставка в любую точку России;
- Техническая поддержка проекта, помощь в подборе аналогов, поставка прототипов;
- Система менеджмента качества сертифицирована по Международному стандарту ISO 9001;
- Лицензия ФСБ на осуществление работ с использованием сведений, составляющих государственную тайну;
- Поставка специализированных компонентов (Xilinx, Altera, Analog Devices, Intersil, Interpoint, Microsemi, Aeroflex, Peregrine, Syfer, Eurofarad, Texas Instrument, Miteq, Cobham, E2V, MA-COM, Hittite, Mini-Circuits,General Dynamics и др.);

Помимо этого, одним из направлений компании «ЭлектроПласт» является направление «Источники питания». Мы предлагаем Вам помощь Конструкторского отдела:

- Подбор оптимального решения, техническое обоснование при выборе компонента;
- Подбор аналогов;
- Консультации по применению компонента;
- Поставка образцов и прототипов;
- Техническая поддержка проекта;
- Защита от снятия компонента с производства.

**Как с нами связаться**

**Телефон:** 8 (812) 309 58 32 (многоканальный)
**Факс:** 8 (812) 320-02-42
**Электронная почта:** org@eplast1.ru
**Адрес:** 198099, г. Санкт-Петербург, ул. Калинина, дом 2, корпус 4, литера А.