**Part Number:** 0010112013
**Status:** Active
**Overview:** kk
**Description:** 2.54mm (.100") Pitch KK® Crimp Terminal Housing, High Pressure, 1 Circuits

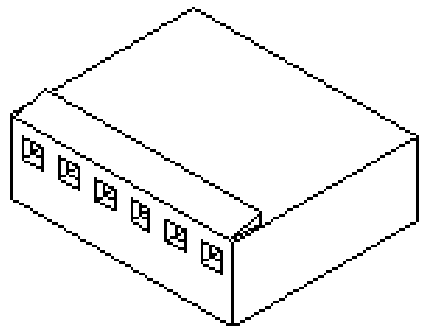

Series
*image - Reference only*

**Documents:**
3D Model
Drawing (PDF)
Product Specification PS-7879 (PDF)
RoHS Certificate of Compliance (PDF)

## Agency Certification

| | |
|---|---|
| CSA | LR19980 |
| UL | E29179 |

## General

| | |
|---|---|
| Product Family | Crimp Housings |
| Series | 7880 |
| Overview | kk |
| Product Name | KK® |

## Physical

| | |
|---|---|
| Circuits (maximum) | 1 |
| Color - Resin | Natural (White) |
| Flammability | 94V-0 |
| Gender | Female |
| Glow-Wire Compliant | No |
| Material - Resin | Nylon |
| Number of Rows | 1 |
| Packaging Type | Bag |
| Panel Mount | No |
| Pitch - Mating Interface (in) | 0.100 In |
| Pitch - Mating Interface (mm) | 2.54 mm |
| Stackable | No |
| Temperature Range - Operating | 0°C to +75°C |

## Material Info

| | |
|---|---|
| Old Part Number | 7880-1B |

## Reference - Drawing Numbers

| | |
|---|---|
| Product Specification | PS-7879 |
| Sales Drawing | SD-7880 |

**EU RoHS**
**ELV and RoHS Compliant**
**REACH SVHC**
Not Reviewed
**Halogen-Free Status**
**Halogen-Free**

**China RoHS**

**Need more information on product environmental compliance?**

Email productcompliance@molex.com
For a multiple part number RoHS Certificate of Compliance, click here

Please visit the Contact Us section for any non-product compliance questions.

**Search Parts in this Series**
7880Series

**Mates With**
2.54mm (.100") Pitch KK® Crimp Terminal Housing, High Pressure, 1 Circuits

**Use With**
7879 KK® High Pressure Crimp Terminal

| NO. OF CKT'S. | DIM. A | DIM. B |
|---|---|---|
| 1 | | .122±.010 (3.10±.25) |
| 2 | .100±.004 (2.54±.10) | .222±.010 (5.64±.25) |
| 3 | .200±.004 (5.08±.10) | .322±.010 (8.18±.25) |
| 4 | .300±.004 (7.62±.10) | .422±.010 (10.72±.25) |
| 5 | .400±.004 (10.16±.10) | .522±.010 (13.26±.25) |
| 6 | .500±.005 (12.70±.13) | .622±.010 (15.80±.25) |
| 7 | .600±.005 (15.24±.13) | .722±.011 (18.34±.28) |
| 8 | .700±.005 (17.78±.13) | .822±.011 (20.88±.28) |
| 9 | .800±.006 (20.32±.15) | .922±.011 (23.42±.28) |
| 10 | .900±.006 (22.86±.15) | 1.022±.012 (25.96±.30) |
| 11 | 1.000±.006 (25.40±.15) | 1.122±.012 (28.50±.30) |
| 12 | 1.100±.006 (27.94±.15) | 1.222±.012 (31.04±.30) |
| 13 | 1.200±.007 (30.48±.18) | 1.322±.012 (33.58±.30) |
| 14 | 1.300±.007 (33.02±.18) | 1.422±.013 (36.12±.33) |
| 15 | 1.400±.011 (35.56±.28) | 1.522±.013 (38.66±.33) |
| 16 | 1.500±.011 (38.10±.28) | 1.622±.013 (41.20±.33) |
| 17 | 1.600±.011 (40.64±.28) | 1.722±.013 (43.74±.33) |
| 18 | 1.700±.011 (43.18±.28) | 1.822±.014 (46.28±.36) |
| 19 | 1.800±.011 (45.72±.28) | 1.922±.014 (48.82±.36) |
| 20 | 1.900±.011 (48.26±.28) | 2.022±.014 (51.36±.36) |
| 21 | 2.000±.012 (50.80±.30) | 2.122±.015 (53.90±.38) |
| 22 | 2.100±.012 (53.34±.30) | 2.222±.015 (56.44±.38) |
| 23 | 2.200±.012 (55.88±.30) | 2.322±.015 (59.98±.38) |
| 24 | 2.300±.012 (58.42±.30) | 2.422±.016 (61.52±.41) |
| 25 | 2.400±.013 (60.96±.33) | 2.522±.016 (64.06±.41) |
| 26 | 2.500±.013 (63.50±.33) | 2.622±.016 (66.60±.41) |
| 27 | 2.600±.013 (66.04±.33) | 2.722±.016 (69.14±.41) |
| 28 | 2.700±.013 (68.58±.33) | 2.822±.017 (71.68±.43) |

NOTES:

1. DIMENSIONS GIVEN ACROSS CENTERLINES ARE SYMMETRICAL ABOUT THOSE CENTERLINES WITHIN HALF THE TOTAL TOLERANCES.
2. THIS HOUSING FOR USE WITH SHROUDED TERMINAL 7879.
3. THIS PRODUCT COMPLIES WITH MOLEX PRODUCT SPEC. NO. 7879.
4. SPECIAL SUPPORT MAY BE REQUIRED FOR PRINTED CIRCUIT BOARDS USED WITH 10 OR MORE CIRCUIT CONNECTORS.
5. INSERTION AND WITHDRAWL FORCES RANGE FROM 1.3 TO 1.9 POUNDS PER CIRCUIT.

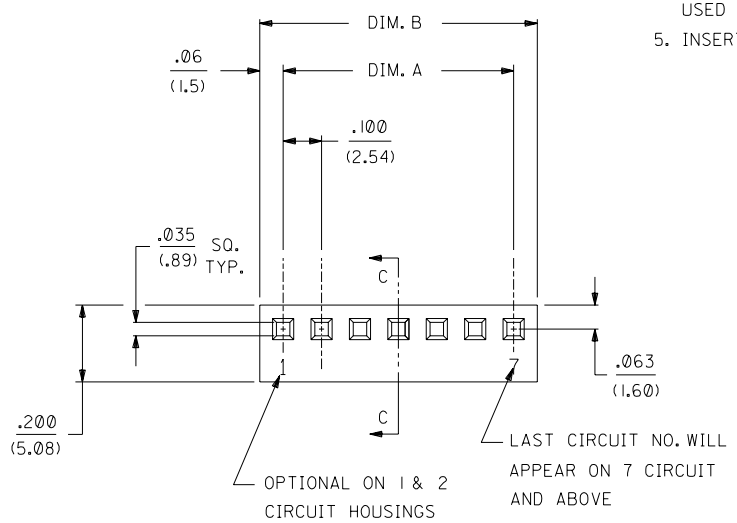


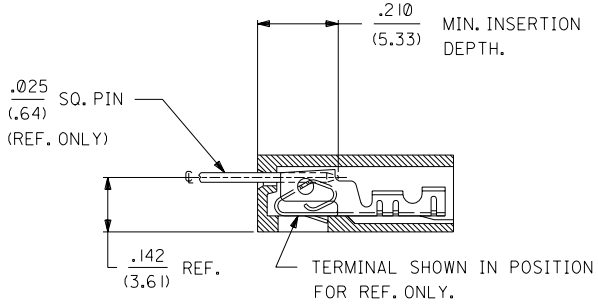


SECTION C-C

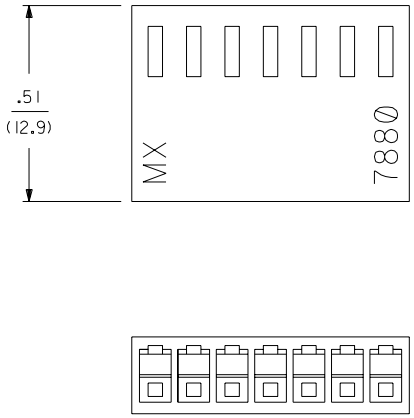


7880 - N * - *

NO. OF CKTS.

VOID CODE
NO. CORRESPONDS TO CKT. NO. VOIDED.
MULT. VOIDS START WITH 51.

| OPTION CODE | | |
|---|---|---|
| OPT. CODE | RAMP | MATERIAL |
| A | NONE | NYLON, 94V-0, COLOR-WHITE |
| B | STD. RAMP | NYLON, 94V-0, COLOR-WHITE |
| C | POL. RAMP | NYLON, 94V-0, COLOR-WHITE |

| LTR. | REVISIONS | LTR. | REVISIONS |
|---|---|---|---|
| | | L1 | ADD REGRIND UCP2003-1447 12/26/2002 SAMIEC |

DIMENSIONS SHOWN (METRIC) INCH
UNLESS OTHERWISE SPECIFIED TOLERANCES: ANGULAR ± 1/2°

| | INCH | METRIC |
|---|---|---|
| 3 PLACE | ± .010 | --- |
| 2 PLACE | ± .014 | ± 0.25 |
| 1 PLACE | --- | ± 0.35 |

DRAFT WHERE APPLICABLE MUST REMAIN WITHIN DIMENSIONS

DRWG. BY GUZIK | CHK'D. BY PATEL | APP'D. BY LENZ | SCALE :

| MFG. | SH. | REV. |
|---|---|---|
| | 2 | L |
| | 1 | L1 |

▽ = 0 ▼ = 0 REVISE ONLY ON CAD SYSTEM

TITLE (2.54)/.100 KK, HOUSING FOR SHROUDED CRIMP TYPE TERMINAL

molex MOLEX INCORPORATED LISLE, ILL. 60532 U.S.A.

SHEET NO. 1 OF 2 | DATE 08/24/88

PART NO. SEE CHART | DRWG. NO. SD-7880

FILE NAME

THIS DRAWING CONTAINS INFORMATION THAT IS PROPRIETARY TO MOLEX INC. AND SHOULD NOT BE USED WITHOUT WRITTEN PERMISSION.

DIV. | SIZE C

7880

7880

| 7880-NA-* | | | 7880-NB-* | | | 7880-NC-* | | |
|---|---|---|---|---|---|---|---|---|
| PART NO. | ENG. NO | VOID CKT. | PART NO. | ENG. NO | VOID CKT. | PART NO. | ENG. NO | VOID CKT. |
| 10-01-2019 | 7880-1A | | 10-11-2013 | 7880-1B | | N/A | 7880-1C | |
| 10-01-2029 | 7880-2A | | 10-11-2023 | 7880-2B | | 10-11-2024 | 7880-2C | |
| 10-01-2039 | 7880-3A | | 10-11-2033 | 7880-3B | | 10-11-2034 | 7880-3C | |
| 10-01-2049 | 7880-4A | | 10-11-2043 | 7880-4B | | 10-11-2044 | 7880-4C | |
| 10-01-2059 | 7880-5A | | 10-11-2053 | 7880-5B | | 10-11-2054 | 7880-5C | |
| 10-01-2069 | 7880-6A | | 10-11-2063 | 7880-6B | | 10-11-2064 | 7880-6C | |
| 10-01-2079 | 7880-7A | | 10-11-2073 | 7880-7B | | 10-11-2074 | 7880-7C | |
| 10-01-2089 | 7880-8A | | 10-11-2083 | 7880-8B | | 10-11-2084 | 7880-8C | |
| 10-01-2099 | 7880-9A | | 10-11-2093 | 7880-9B | | 10-11-2094 | 7880-9C | |
| 10-01-2109 | 7880-10A | | 10-11-2103 | 7880-10B | | 10-11-2104 | 7880-10C | |
| 10-01-2119 | 7880-11A | | 10-11-2113 | 7880-11B | | 10-11-2114 | 7880-11C | |
| 10-01-2129 | 7880-12A | | 10-11-2123 | 7880-12B | | 10-11-2124 | 7880-12C | |
| 10-01-2139 | 7880-13A | | 10-11-2133 | 7880-13B | | 10-11-2134 | 7880-13C | |
| 10-01-2149 | 7880-14A | | 10-11-2143 | 7880-14B | | 10-11-2144 | 7880-14C | |
| 10-01-2159 | 7880-15A | | 10-11-2153 | 7880-15B | | 10-11-2154 | 7880-15C | |
| 10-01-2169 | 7880-16A | | 10-11-2163 | 7880-16B | | 10-11-2164 | 7880-16C | |
| 10-01-2179 | 7880-17A | | 10-11-2173 | 7880-17B | | 10-11-2174 | 7880-17C | |
| 10-01-2189 | 7880-18A | | 10-11-2183 | 7880-18B | | 10-11-2184 | 7880-18C | |
| 10-01-2199 | 7880-19A | | 10-11-2193 | 7880-19B | | 10-11-2194 | 7880-19C | |
| 10-01-2209 | 7880-20A | | 10-11-2203 | 7880-20B | | 10-11-2204 | 7880-20C | |
| 10-01-2219 | 7880-21A | | 10-11-2213 | 7880-21B | | 10-11-2214 | 7880-21C | |
| 10-01-2229 | 7880-22A | | 10-11-2223 | 7880-22B | | 10-11-2224 | 7880-22C | |
| 10-01-2239 | 7880-23A | | 10-11-2233 | 7880-23B | | 10-11-2234 | 7880-23C | |
| 10-01-2249 | 7880-24A | | 10-11-2243 | 7880-24B | | 10-11-2244 | 7880-24C | |
| 10-01-2259 | 7880-25A | | 10-11-2253 | 7880-25B | | 10-11-2254 | 7880-25C | |
| 10-01-2269 | 7880-26A | | 10-11-2263 | 7880-26B | | 10-11-2264 | 7880-26C | |
| 10-01-2279 | 7880-27A | | 10-11-2273 | 7880-27B | | 10-11-2274 | 7880-27C | |
| 10-01-2289 | 7880-28A | | 10-11-2283 | 7880-28B | | 10-11-2284 | 7880-28C | |
| | | | 10-11-2052 | 7880-5B-2 | 2 | | | |
| | | | 10-11-2092 | 7880-9B-2 | 2 | | | |
| | | | 10-11-2105 | 7880-10B-4 | 4 | | | |

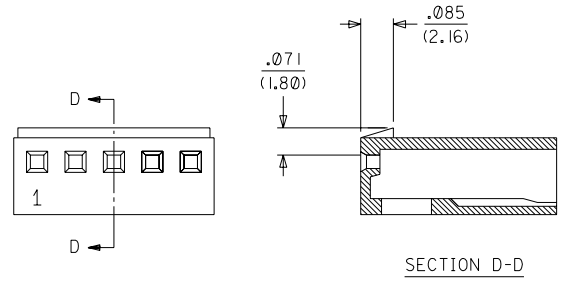


7880-NB-*
STD. RAMP OPTION

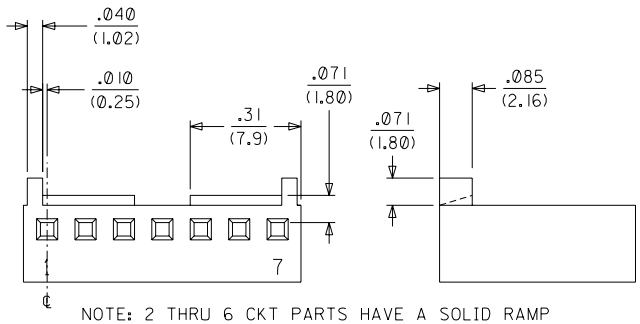


NOTE: 2 THRU 6 CKT PARTS HAVE A SOLID RAMP

7880-NC-*
POLARIZING RAMP OPTION

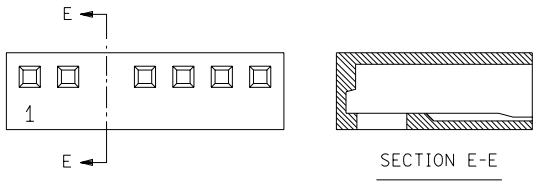


STD. VOID OPTION
(VOIDS NOT AVAILABLE IN FIRST OR LAST CKT.)

| LTR. | REVISIONS | LTR. | REVISIONS |
|---|---|---|---|
| | SEE SHEET 1 | | SEE SHEET 1 |
| | SEE SHEET 1 | | SEE SHEET 1 |
| | SEE SHEET 1 | | SEE SHEET 1 |
| | SEE SHEET 1 | | SEE SHEET 1 |
| | SEE SHEET 1 | L | SEE SHEET 1 |
| | SEE SHEET 1 | K3 | SEE SHEET 1 |
| | SEE SHEET 1 | H | SEE SHEET 1 |

DIMENSIONS SHOWN (METRIC) INCH
UNLESS OTHERWISE SPECIFIED TOLERANCES: ANGULAR ± 1/2°

| | INCH | METRIC |
|---|---|---|
| 3 PLACE | ± .010 | |
| 2 PLACE | ± .014 | ± 0.25 |
| 1 PLACE | | ± 0.36 |

DRAFT WHERE APPLICABLE MUST REMAIN WITHIN DIMENSIONS

DRWG. BY GUZIK | CHK'D. BY PATEL
APP'D. BY LENZ | SCALE :

▽ = 0 ▼ = 0 REVISE ONLY ON CAD SYSTEM

TITLE
(2.54)/.100 KK, HOUSING
FOR SHROUDED CRIMP
TYPE TERMINAL

molex MOLEX INCORPORATED
LISLE, ILL. 60532 U.S.A.

SHEET NO. 2 | DATE 08/24/88

PART NO. SEE CHART | DRWG. NO. SD-7880

FILE NAME

THIS DRAWING CONTAINS INFORMATION THAT IS PROPRIETARY TO MOLEX INC. AND SHOULD NOT BE USED WITHOUT WRITTEN PERMISSION.

DIV. | SIZE C

Компания «ЭлектроПласт» предлагает заключение долгосрочных отношений при поставках импортных электронных компонентов на взаимовыгодных условиях!

Наши преимущества:

- Оперативные поставки широкого спектра электронных компонентов отечественного и импортного производства напрямую от производителей и с крупнейших мировых складов;
- Поставка более 17-ти миллионов наименований электронных компонентов;
- Поставка сложных, дефицитных, либо снятых с производства позиций;
- Оперативные сроки поставки под заказ (от 5 рабочих дней);
- Экспресс доставка в любую точку России;
- Техническая поддержка проекта, помощь в подборе аналогов, поставка прототипов;
- Система менеджмента качества сертифицирована по Международному стандарту ISO 9001;
- Лицензия ФСБ на осуществление работ с использованием сведений, составляющих государственную тайну;
- Поставка специализированных компонентов (Xilinx, Altera, Analog Devices, Intersil, Interpoint, Microsemi, Aeroflex, Peregrine, Syfer, Eurofarad, Texas Instrument, Miteq, Cobham, E2V, MA-COM, Hittite, Mini-Circuits,General Dynamics и др.);

Помимо этого, одним из направлений компании «ЭлектроПласт» является направление «Источники питания». Мы предлагаем Вам помощь Конструкторского отдела:

- Подбор оптимального решения, техническое обоснование при выборе компонента;
- Подбор аналогов;
- Консультации по применению компонента;
- Поставка образцов и прототипов;
- Техническая поддержка проекта;
- Защита от снятия компонента с производства.

**Как с нами связаться**

**Телефон:** 8 (812) 309 58 32 (многоканальный)
**Факс:** 8 (812) 320-02-42
**Электронная почта:** org@eplast1.ru
**Адрес:** 198099, г. Санкт-Петербург, ул. Калинина, дом 2, корпус 4, литера А.