Part Number: 0010112013
Status: Active
Overview: kk
Description: 2.54mm (.100") Pitch KK® Crimp Terminal Housing, High Pressure, 1 Circuits

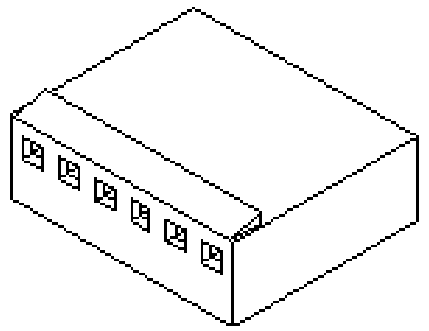

Series
image - Reference only

Documents:
3D Model
Drawing (PDF)
Product Specification PS-7879 (PDF)
RoHS Certificate of Compliance (PDF)

Agency Certification

CSA	LR19980
UL	E29179

General

Product Family	Crimp Housings
Series	7880
Overview	kk
Product Name	KK®

Physical

Circuits (maximum)	1
Color - Resin	Natural (White)
Flammability	94V-0
Gender	Female
Glow-Wire Compliant	No
Material - Resin	Nylon
Number of Rows	1
Packaging Type	Bag
Panel Mount	No
Pitch - Mating Interface (in)	0.100 In
Pitch - Mating Interface (mm)	2.54 mm
Stackable	No
Temperature Range - Operating	0°C to +75°C

Material Info

Old Part Number	7880-1B

Reference - Drawing Numbers

Product Specification	PS-7879
Sales Drawing	SD-7880

EU RoHS
ELV and RoHS Compliant
REACH SVHC
Not Reviewed
Halogen-Free Status
Halogen-Free

China RoHS

Need more information on product environmental compliance?

Email productcompliance@molex.com
For a multiple part number RoHS Certificate of Compliance, click here

Please visit the Contact Us section for any non-product compliance questions.

Search Parts in this Series
7880Series

Mates With
2.54mm (.100") Pitch KK® Crimp Terminal Housing, High Pressure, 1 Circuits

Use With
7879 KK® High Pressure Crimp Terminal

NO. OF CKT'S.	DIM. A	DIM. B
1		.122±.010 (3.10±.25)
2	.100±.004 (2.54±.10)	.222±.010 (5.64±.25)
3	.200±.004 (5.08±.10)	.322±.010 (8.18±.25)
4	.300±.004 (7.62±.10)	.422±.010 (10.72±.25)
5	.400±.004 (10.16±.10)	.522±.010 (13.26±.25)
6	.500±.005 (12.70±.13)	.622±.010 (15.80±.25)
7	.600±.005 (15.24±.13)	.722±.011 (18.34±.28)
8	.700±.005 (17.78±.13)	.822±.011 (20.88±.28)
9	.800±.006 (20.32±.15)	.922±.011 (23.42±.28)
10	.900±.006 (22.86±.15)	1.022±.012 (25.96±.30)
11	1.000±.006 (25.40±.15)	1.122±.012 (28.50±.30)
12	1.100±.006 (27.94±.15)	1.222±.012 (31.04±.30)
13	1.200±.007 (30.48±.18)	1.322±.012 (33.58±.30)
14	1.300±.007 (33.02±.18)	1.422±.013 (36.12±.33)
15	1.400±.011 (35.56±.28)	1.522±.013 (38.66±.33)
16	1.500±.011 (38.10±.28)	1.622±.013 (41.20±.33)
17	1.600±.011 (40.64±.28)	1.722±.013 (43.74±.33)
18	1.700±.011 (43.18±.28)	1.822±.014 (46.28±.36)
19	1.800±.011 (45.72±.28)	1.922±.014 (48.82±.36)
20	1.900±.011 (48.26±.28)	2.022±.014 (51.36±.36)
21	2.000±.012 (50.80±.30)	2.122±.015 (53.90±.38)
22	2.100±.012 (53.34±.30)	2.222±.015 (56.44±.38)
23	2.200±.012 (55.88±.30)	2.322±.015 (59.98±.38)
24	2.300±.012 (58.42±.30)	2.422±.016 (61.52±.41)
25	2.400±.013 (60.96±.33)	2.522±.016 (64.06±.41)
26	2.500±.013 (63.50±.33)	2.622±.016 (66.60±.41)
27	2.600±.013 (66.04±.33)	2.722±.016 (69.14±.41)
28	2.700±.013 (68.58±.33)	2.822±.017 (71.68±.43)

NOTES:

1. DIMENSIONS GIVEN ACROSS CENTERLINES ARE SYMMETRICAL ABOUT THOSE CENTERLINES WITHIN HALF THE TOTAL TOLERANCES.
2. THIS HOUSING FOR USE WITH SHROUDED TERMINAL 7879.
3. THIS PRODUCT COMPLIES WITH MOLEX PRODUCT SPEC. NO. 7879.
4. SPECIAL SUPPORT MAY BE REQUIRED FOR PRINTED CIRCUIT BOARDS USED WITH 10 OR MORE CIRCUIT CONNECTORS.
5. INSERTION AND WITHDRAWL FORCES RANGE FROM 1.3 TO 1.9 POUNDS PER CIRCUIT.

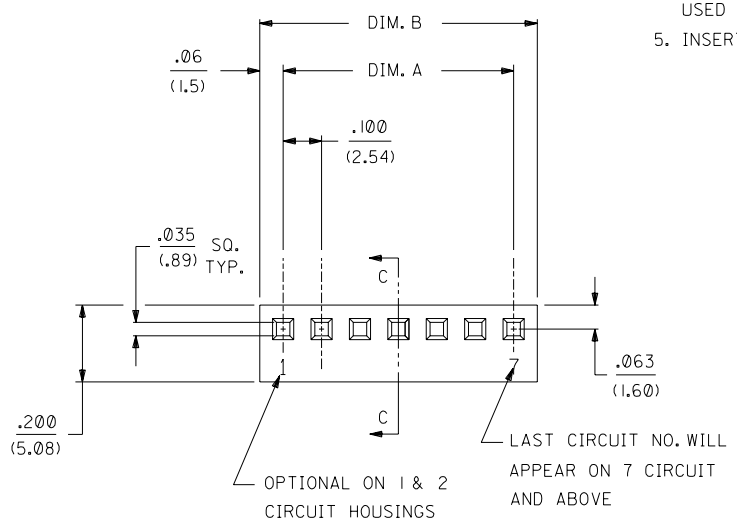

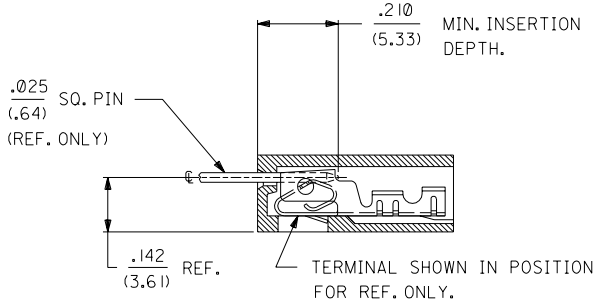

SECTION C-C

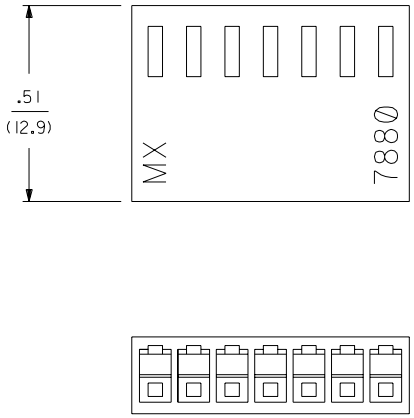

7880 - N * - *

NO. OF CKTS.

VOID CODE
NO. CORRESPONDS TO CKT. NO. VOIDED.
MULT. VOIDS START WITH 51.

OPTION CODE		
OPT. CODE	RAMP	MATERIAL
A	NONE	NYLON, 94V-0, COLOR-WHITE
B	STD. RAMP	NYLON, 94V-0, COLOR-WHITE
C	POL. RAMP	NYLON, 94V-0, COLOR-WHITE

LTR.	REVISIONS	LTR.	REVISIONS
		L1	ADD REGRIND UCP2003-1447 12/26/2002 SAMIEC

DIMENSIONS SHOWN (METRIC) INCH
UNLESS OTHERWISE SPECIFIED TOLERANCES: ANGULAR ± 1/2°

	INCH	METRIC
3 PLACE	± .010	---
2 PLACE	± .014	± 0.25
1 PLACE	---	± 0.35

DRAFT WHERE APPLICABLE MUST REMAIN WITHIN DIMENSIONS

DRWG. BY GUZIK | CHK'D. BY PATEL | APP'D. BY LENZ | SCALE :

MFG.	SH.	REV.
	2	L
	1	L1

▽ = 0 ▼ = 0 REVISE ONLY ON CAD SYSTEM

TITLE (2.54)/.100 KK, HOUSING FOR SHROUDED CRIMP TYPE TERMINAL

molex MOLEX INCORPORATED LISLE, ILL. 60532 U.S.A.

SHEET NO. 1 OF 2 | DATE 08/24/88

PART NO. SEE CHART | DRWG. NO. SD-7880

FILE NAME

THIS DRAWING CONTAINS INFORMATION THAT IS PROPRIETARY TO MOLEX INC. AND SHOULD NOT BE USED WITHOUT WRITTEN PERMISSION.

DIV. | SIZE C

7880

7880

7880-NA-*			7880-NB-*			7880-NC-*		
PART NO.	ENG. NO	VOID CKT.	PART NO.	ENG. NO	VOID CKT.	PART NO.	ENG. NO	VOID CKT.
10-01-2019	7880-1A		10-11-2013	7880-1B		N/A	7880-1C	
10-01-2029	7880-2A		10-11-2023	7880-2B		10-11-2024	7880-2C	
10-01-2039	7880-3A		10-11-2033	7880-3B		10-11-2034	7880-3C	
10-01-2049	7880-4A		10-11-2043	7880-4B		10-11-2044	7880-4C	
10-01-2059	7880-5A		10-11-2053	7880-5B		10-11-2054	7880-5C	
10-01-2069	7880-6A		10-11-2063	7880-6B		10-11-2064	7880-6C	
10-01-2079	7880-7A		10-11-2073	7880-7B		10-11-2074	7880-7C	
10-01-2089	7880-8A		10-11-2083	7880-8B		10-11-2084	7880-8C	
10-01-2099	7880-9A		10-11-2093	7880-9B		10-11-2094	7880-9C	
10-01-2109	7880-10A		10-11-2103	7880-10B		10-11-2104	7880-10C	
10-01-2119	7880-11A		10-11-2113	7880-11B		10-11-2114	7880-11C	
10-01-2129	7880-12A		10-11-2123	7880-12B		10-11-2124	7880-12C	
10-01-2139	7880-13A		10-11-2133	7880-13B		10-11-2134	7880-13C	
10-01-2149	7880-14A		10-11-2143	7880-14B		10-11-2144	7880-14C	
10-01-2159	7880-15A		10-11-2153	7880-15B		10-11-2154	7880-15C	
10-01-2169	7880-16A		10-11-2163	7880-16B		10-11-2164	7880-16C	
10-01-2179	7880-17A		10-11-2173	7880-17B		10-11-2174	7880-17C	
10-01-2189	7880-18A		10-11-2183	7880-18B		10-11-2184	7880-18C	
10-01-2199	7880-19A		10-11-2193	7880-19B		10-11-2194	7880-19C	
10-01-2209	7880-20A		10-11-2203	7880-20B		10-11-2204	7880-20C	
10-01-2219	7880-21A		10-11-2213	7880-21B		10-11-2214	7880-21C	
10-01-2229	7880-22A		10-11-2223	7880-22B		10-11-2224	7880-22C	
10-01-2239	7880-23A		10-11-2233	7880-23B		10-11-2234	7880-23C	
10-01-2249	7880-24A		10-11-2243	7880-24B		10-11-2244	7880-24C	
10-01-2259	7880-25A		10-11-2253	7880-25B		10-11-2254	7880-25C	
10-01-2269	7880-26A		10-11-2263	7880-26B		10-11-2264	7880-26C	
10-01-2279	7880-27A		10-11-2273	7880-27B		10-11-2274	7880-27C	
10-01-2289	7880-28A		10-11-2283	7880-28B		10-11-2284	7880-28C	
			10-11-2052	7880-5B-2	2			
			10-11-2092	7880-9B-2	2			
			10-11-2105	7880-10B-4	4			

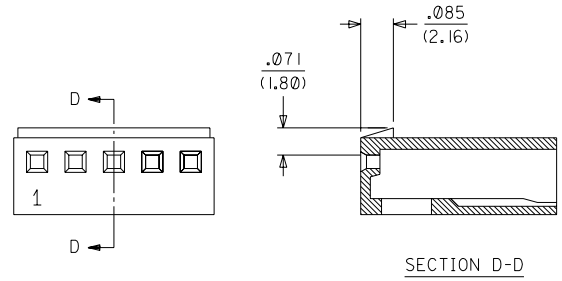

7880-NB-*
STD. RAMP OPTION

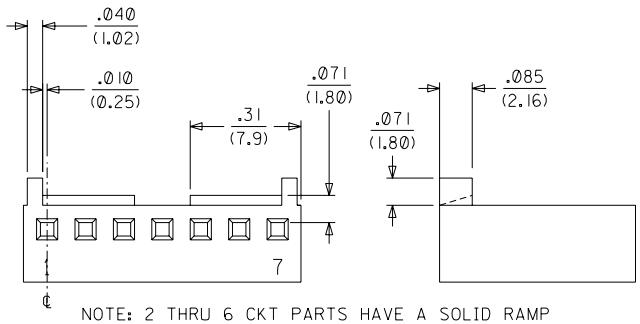

NOTE: 2 THRU 6 CKT PARTS HAVE A SOLID RAMP

7880-NC-*
POLARIZING RAMP OPTION

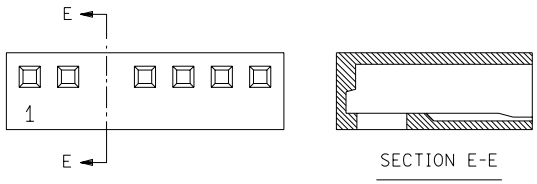

STD. VOID OPTION
(VOIDS NOT AVAILABLE IN FIRST OR LAST CKT.)

LTR.	REVISIONS	LTR.	REVISIONS
	SEE SHEET 1		SEE SHEET 1
	SEE SHEET 1		SEE SHEET 1
	SEE SHEET 1		SEE SHEET 1
	SEE SHEET 1		SEE SHEET 1
	SEE SHEET 1	L	SEE SHEET 1
	SEE SHEET 1	K3	SEE SHEET 1
	SEE SHEET 1	H	SEE SHEET 1

DIMENSIONS SHOWN (METRIC) INCH
UNLESS OTHERWISE SPECIFIED TOLERANCES: ANGULAR ± 1/2°

	INCH	METRIC
3 PLACE	± .010	
2 PLACE	± .014	± 0.25
1 PLACE		± 0.36

DRAFT WHERE APPLICABLE MUST REMAIN WITHIN DIMENSIONS

DRWG. BY GUZIK | CHK'D. BY PATEL
APP'D. BY LENZ | SCALE :

▽ = 0 ▼ = 0 REVISE ONLY ON CAD SYSTEM

TITLE
(2.54)/.100 KK, HOUSING
FOR SHROUDED CRIMP
TYPE TERMINAL

molex MOLEX INCORPORATED
LISLE, ILL. 60532 U.S.A.

SHEET NO. 2 | DATE 08/24/88

PART NO. SEE CHART | DRWG. NO. SD-7880

FILE NAME

THIS DRAWING CONTAINS INFORMATION THAT IS PROPRIETARY TO MOLEX INC. AND SHOULD NOT BE USED WITHOUT WRITTEN PERMISSION.

DIV. | SIZE C

Компания «ЭлектроПласт» предлагает заключение долгосрочных отношений при поставках импортных электронных компонентов на взаимовыгодных условиях!

Наши преимущества:

- Оперативные поставки широкого спектра электронных компонентов отечественного и импортного производства напрямую от производителей и с крупнейших мировых складов;
- Поставка более 17-ти миллионов наименований электронных компонентов;
- Поставка сложных, дефицитных, либо снятых с производства позиций;
- Оперативные сроки поставки под заказ (от 5 рабочих дней);
- Экспресс доставка в любую точку России;
- Техническая поддержка проекта, помощь в подборе аналогов, поставка прототипов;
- Система менеджмента качества сертифицирована по Международному стандарту ISO 9001;
- Лицензия ФСБ на осуществление работ с использованием сведений, составляющих государственную тайну;
- Поставка специализированных компонентов (Xilinx, Altera, Analog Devices, Intersil, Interpoint, Microsemi, Aeroflex, Peregrine, Syfer, Eurofarad, Texas Instrument, Miteq, Cobham, E2V, MA-COM, Hittite, Mini-Circuits,General Dynamics и др.);

Помимо этого, одним из направлений компании «ЭлектроПласт» является направление «Источники питания». Мы предлагаем Вам помощь Конструкторского отдела:

- Подбор оптимального решения, техническое обоснование при выборе компонента;
- Подбор аналогов;
- Консультации по применению компонента;
- Поставка образцов и прототипов;
- Техническая поддержка проекта;
- Защита от снятия компонента с производства.

Как с нами связаться

Телефон: 8 (812) 309 58 32 (многоканальный)
Факс: 8 (812) 320-02-42
Электронная почта: org@eplast1.ru
Адрес: 198099, г. Санкт-Петербург, ул. Калинина, дом 2, корпус 4, литера А.