- **2-V to 5.5-V V_{CC} Operation**
- **Max t_{pd} of 10.5 ns at 5 V**
- **Support Mixed-Mode Voltage Operation on All Ports**
- **I_{off} Supports Partial-Power-Down Mode Operation**
- **Latch-Up Performance Exceeds 250 mA Per JESD 17**
- **ESD Protection Exceeds JESD 22**
  - **2000-V Human-Body Model (A114-A)**
  - **200-V Machine Model (A115-A)**
  - **1000-V Charged-Device Model (C101)**

G

SN54LV165A . . . J OR W PACKAGE
SN74LV165A . . . D, DB, DGV, NS, OR PW PACKAGE
(TOP VIEW)

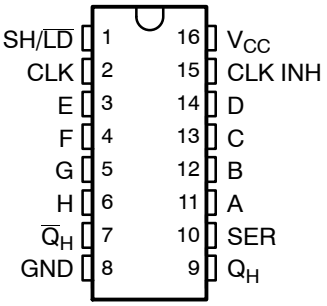

SN74LV165A . . . RGY PACKAGE
(TOP VIEW)

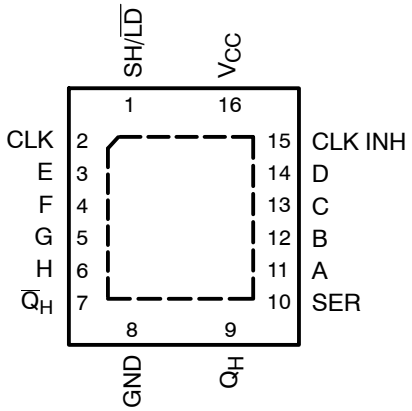

SN54LV165A . . . FK PACKAGE
(TOP VIEW)

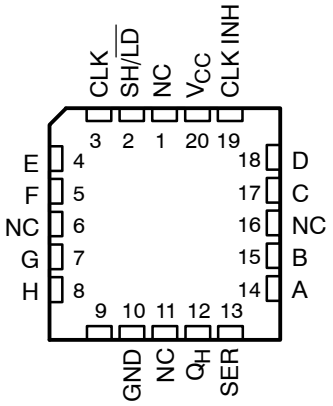

NC – No internal connection

description/ordering information

The ’LV165A devices are parallel-load, 8-bit shift registers designed for 2-V to 5.5-V V_{CC} operation.

When the devices are clocked, data is shifted toward the serial output Q_H. Parallel-in access to each stage is provided by eight individual direct data inputs that are enabled by a low level at the shift/load (SH/$\overline{LD}$) input. The ’LV165A devices feature a clock-inhibit function and a complemented serial output, $\overline{Q}_H$.

ORDERING INFORMATION

T_A	PACKAGE†		ORDERABLE PART NUMBER	TOP-SIDE MARKING
–40°C to 85°C	QFN – RGY	Reel of 1000	SN74LV165ARGYR	LV165A
	SOIC – D	Tube of 40	SN74LV165AD	LV165A
		Reel of 2500	SN74LV165ADRG3	
	SOP – NS	Reel of 2000	SN74LV165ANSR	74LV165A
	SSOP – DB	Reel of 2000	SN74LV165ADBR	LV165A
	TSSOP – PW	Tube of 90	SN74LV165APW	LV165A
		Reel of 2000	SN74LV165APWRG3	
		Reel of 250	SN74LV165APWT	
	TVSOP – DGV	Reel of 2000	SN74LV165ADGVR	LV165A
–55°C to 125°C	CDIP – J	Tube of 25	SNJ54LV165AJ	SNJ54LV165AJ
	CFP – W	Tube of 150	SNJ54LV165AW	SNJ54LV165AW
	LCCC – FK	Tube of 55	SNJ54LV165AFK	SNJ54LV165AFK

† Package drawings, standard packing quantities, thermal data, symbolization, and PCB design guidelines are available at www.ti.com/sc/package.

Please be aware that an important notice concerning availability, standard warranty, and use in critical applications of Texas Instruments semiconductor products and disclaimers thereto appears at the end of this data sheet.

PRODUCTION DATA information is current as of publication date. Products conform to specifications per the terms of Texas Instruments standard warranty. Production processing does not necessarily include testing of all parameters.

Copyright © 2010, Texas Instruments Incorporated

description/ordering information (continued)

Clocking is accomplished by a low-to-high transition of the clock (CLK) input while SH/$\overline{LD}$ is held high and clock inhibit (CLK INH) is held low. The functions of CLK and CLK INH are interchangeable. Since a low CLK and a low-to-high transition of CLK INH accomplishes clocking, CLK INH should be changed to the high level only while CLK is high. Parallel loading is inhibited when SH/$\overline{LD}$ is held high. The parallel inputs to the register are enabled while SH/$\overline{LD}$ is held low, independently of the levels of CLK, CLK INH, or SER.

These devices are fully specified for partial-power-down applications using I_{off}. The I_{off} circuitry disables the outputs, preventing damaging current backflow through the devices when they are powered down.

FUNCTION TABLE

INPUTS			OPERATION
SH/$\overline{LD}$	CLK	CLK INH	
L	X	X	Parallel load
H	H	X	Q_0
H	X	H	Q_0
H	L	↑	Shift
H	↑	L	Shift

logic diagram (positive logic)

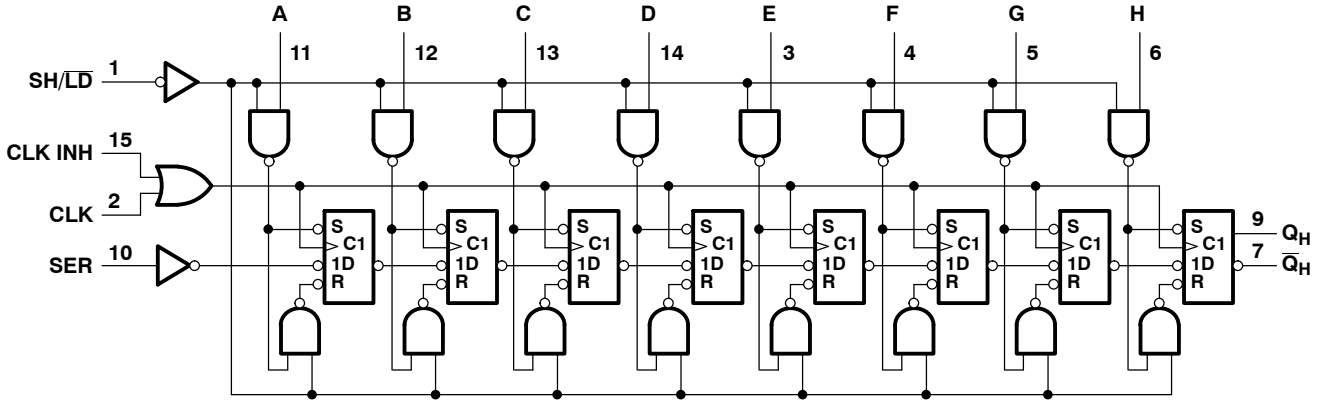

Pin numbers shown are for the D, DB, DGV, J, NS, PW, RGY, and W packages.

typical shift, load, and inhibit sequences

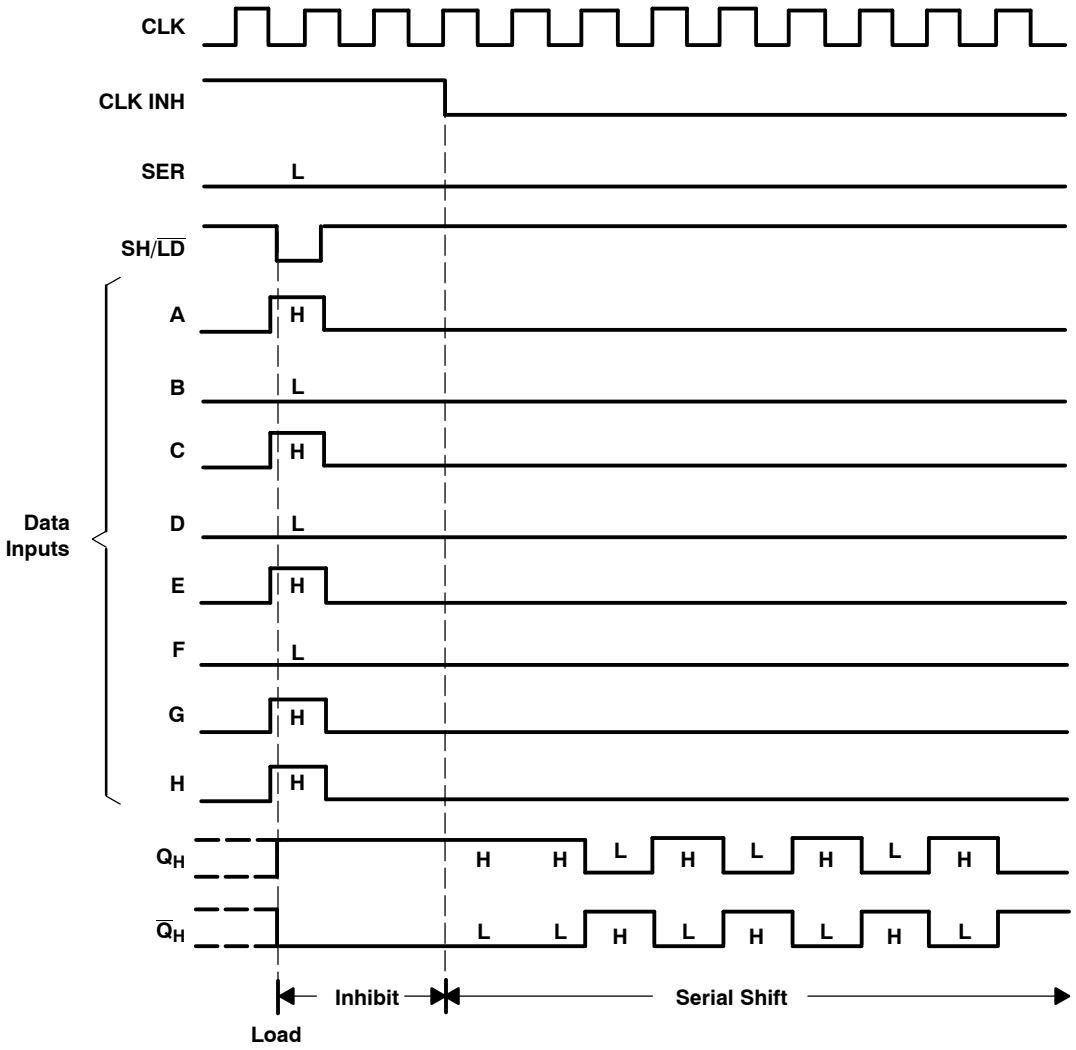

absolute maximum ratings over operating free-air temperature range (unless otherwise noted)†

Supply voltage range, V_{CC}	–0.5 V to 7 V
Input voltage range, V_I (see Note 1)	–0.5 V to 7 V
Voltage range applied to any output in the high-impedance or power-off state, V_O (see Note 1)	–0.5 V to 7 V
Output voltage range, V_O (see Notes 1 and 2)	–0.5 V to V_{CC} + 0.5 V
Input clamp current, I_{IK} (V_I < 0)	–20 mA
Output clamp current, I_{OK} (V_O < 0)	–50 mA
Continuous output current, I_O (V_O = 0 to V_{CC})	±25 mA
Continuous current through V_{CC} or GND	±50 mA
Package thermal impedance, θ_{JA} (see Note 3): D package	73°C/W
(see Note 3): DB package	82°C/W
(see Note 3): DGV package	120°C/W
(see Note 3): NS package	67°C/W
(see Note 3): PW package	108°C/W
(see Note 4): RGY package	39°C/W
Storage temperature range, T_{stg}	–65°C to 150°C

† Stresses beyond those listed under “absolute maximum ratings” may cause permanent damage to the device. These are stress ratings only, and functional operation of the device at these or any other conditions beyond those indicated under “recommended operating conditions” is not implied. Exposure to absolute-maximum-rated conditions for extended periods may affect device reliability.

NOTES:
1. The input and output negative-voltage ratings may be exceeded if the input and output current ratings are observed.
2. This value is limited to 5.5 V maximum.
3. The package thermal impedance is calculated in accordance with JESD 51-7.
4. The package thermal impedance is calculated in accordance with JESD 51-5.

recommended operating conditions (see Note 5)

			SN54LV165A		SN74LV165A		UNIT
			MIN	MAX	MIN	MAX	
V_{CC}	Supply voltage		2	5.5	2	5.5	V
V_{IH}	High-level input voltage	V_{CC} = 2 V	1.5		1.5		V
		V_{CC} = 2.3 V to 2.7 V	$V_{CC} \times 0.7$		$V_{CC} \times 0.7$		
		V_{CC} = 3 V to 3.6 V	$V_{CC} \times 0.7$		$V_{CC} \times 0.7$		
		V_{CC} = 4.5 V to 5.5 V	$V_{CC} \times 0.7$		$V_{CC} \times 0.7$		
V_{IL}	Low-level input voltage	V_{CC} = 2 V		0.5		0.5	V
		V_{CC} = 2.3 V to 2.7 V		$V_{CC} \times 0.3$		$V_{CC} \times 0.3$	
		V_{CC} = 3 V to 3.6 V		$V_{CC} \times 0.3$		$V_{CC} \times 0.3$	
		V_{CC} = 4.5 V to 5.5 V		$V_{CC} \times 0.3$		$V_{CC} \times 0.3$	
V_I	Input voltage		0	5.5	0	5.5	V
V_O	Output voltage		0	V_{CC}	0	V_{CC}	V
I_{OH}	High-level output current	V_{CC} = 2 V		–50		–50	µA
		V_{CC} = 2.3 V to 2.7 V		–2		–2	mA
		V_{CC} = 3 V to 3.6 V		–6		–6	
		V_{CC} = 4.5 V to 5.5 V		–12		–12	
I_{OL}	Low-level output current	V_{CC} = 2 V		50		50	µA
		V_{CC} = 2.3 V to 2.7 V		2		2	mA
		V_{CC} = 3 V to 3.6 V		6		6	
		V_{CC} = 4.5 V to 5.5 V		12		12	
$\Delta t/\Delta v$	Input transition rise or fall rate	V_{CC} = 2.3 V to 2.7 V		200		200	ns/V
		V_{CC} = 3 V to 3.6 V		100		100	
		V_{CC} = 4.5 V to 5.5 V		20		20	
T_A	Operating free-air temperature		–55	125	–40	85	°C

NOTE 5: All unused inputs of the device must be held at V_{CC} or GND to ensure proper device operation. Refer to the TI application report, *Implications of Slow or Floating CMOS Inputs*, literature number SCBA004.

electrical characteristics over recommended operating free-air temperature range (unless otherwise noted)

PARAMETER	TEST CONDITIONS	V_{CC}	SN54LV165A			SN74LV165A			UNIT
			MIN	TYP	MAX	MIN	TYP	MAX	
V_{OH}	I_{OH} = –50 µA	2 V to 5.5 V	V_{CC}–0.1			V_{CC}–0.1			V
	I_{OH} = –2 mA	2.3 V	2			2			
	I_{OH} = –6 mA	3 V	2.48			2.48			
	I_{OH} = –12 mA	4.5 V	3.8			3.8			
V_{OL}	I_{OL} = 50 µA	2 V to 5.5 V			0.1			0.1	V
	I_{OL} = 2 mA	2.3 V			0.4			0.4	
	I_{OL} = 6 mA	3 V			0.44			0.44	
	I_{OL} = 12 mA	4.5 V			0.55			0.55	
I_I	V_I = 5.5 V or GND	0 to 5.5 V			±1			±1	µA
I_{CC}	V_I = V_{CC} or GND, I_O = 0	5.5 V			20			20	µA
I_{off}	V_I or V_O = 0 to 5.5 V	0			5			5	µA
C_i	V_I = V_{CC} or GND	3.3 V		1.7			1.7		pF

timing requirements over recommended operating free-air temperature range, V_{CC} = 2.5 V ± 0.2 V (unless otherwise noted) (see Figure 1)

			T_A = 25°C		SN54LV165A		SN74LV165A		UNIT
			MIN	MAX	MIN	MAX	MIN	MAX	
t_w	Pulse duration	CLK high or low	8.5		9		9		ns
		SH/$\overline{LD}$ low	11		13		13		
t_{su}	Setup time	SH/$\overline{LD}$ high before CLK↑	7		8.5		8.5		ns
		SER before CLK↑	8.5		9.5		9.5		
		CLK INH before CLK↑	7		7		7		
		Data before SH/$\overline{LD}$↑	11.5		12		12		
t_h	Hold time	SER data after CLK↑	–1		0		0		ns
		Parallel data after SH/$\overline{LD}$↑	0		0.5		0.5		
		SH/$\overline{LD}$ high after CLK↑	0		0		0		

timing requirements over recommended operating free-air temperature range, V_{CC} = 3.3 V ± 0.3 V (unless otherwise noted) (see Figure 1)

			T_A = 25°C		SN54LV165A		SN74LV165A		UNIT
			MIN	MAX	MIN	MAX	MIN	MAX	
t_w	Pulse duration	CLK high or low	6		7		7		ns
		SH/$\overline{LD}$ low	7.5		9		9		
t_{su}	Setup time	SH/$\overline{LD}$ high before CLK↑	5		6		6		ns
		SER before CLK↑	5		6		6		
		CLK INH before CLK↑	5		5		5		
		Data before SH/$\overline{LD}$↑	7.5		8.5		8.5		
t_h	Hold time	SER data after CLK↑	0		0		0		ns
		Parallel data after SH/$\overline{LD}$↑	0.5		0.5		0.5		
		SH/$\overline{LD}$ high after CLK↑	0		0		0		

timing requirements over recommended operating free-air temperature range, V_{CC} = 5 V ± 0.5 V (unless otherwise noted) (see Figure 1)

			T_A = 25°C		SN54LV165A		SN74LV165A		UNIT
			MIN	MAX	MIN	MAX	MIN	MAX	
t_w	Pulse duration	CLK high or low	4		4		4		ns
		SH/$\overline{LD}$ low	5		6		6		
t_{su}	Setup time	SH/$\overline{LD}$ high before CLK↑	4		4		4		ns
		SER before CLK↑	4		4		4		
		CLK INH before CLK↑	3.5		3.5		3.5		
		Data before SH/$\overline{LD}$↑	5		5		5		
t_h	Hold time	SER data after CLK↑	0.5		0.5		0.5		ns
		Parallel data after SH/$\overline{LD}$↑	1		1		1		
		SH/$\overline{LD}$ high after CLK↑	0.5		0.5		0.5		

switching characteristics over recommended operating free-air temperature range, V_{CC} = 2.5 V ± 0.2 V (unless otherwise noted) (see Figure 1)

PARAMETER	FROM (INPUT)	TO (OUTPUT)	LOAD CAPACITANCE	T_A = 25°C			SN54LV165A		SN74LV165A		UNIT
				MIN	TYP	MAX	MIN	MAX	MIN	MAX	
f_{max}			C_L = 15 pF	50*	80*		45*		45		MHz
			C_L = 50 pF	40	65		35		35		
t_{pd}	CLK	Q_H or $\overline{Q}_H$	C_L = 15 pF		12.2*	19.8*	1*	22*	1	22	ns
	SH/$\overline{LD}$				13.1*	21.5*	1*	23.5*	1	23.5	
	H				12.9*	21.7*	1*	24*	1	24	
t_{pd}	CLK	Q_H or $\overline{Q}_H$	C_L = 50 pF		15.3	23.3	1	26	1	26	ns
	SH/$\overline{LD}$				16.1	25.1	1	28	1	28	
	H				15.9	25.3	1	28	1	28	

* On products compliant to MIL-PRF-38535, this parameter is not production tested.

switching characteristics over recommended operating free-air temperature range, V_{CC} = 3.3 V ± 0.3 V (unless otherwise noted) (see Figure 1)

PARAMETER	FROM (INPUT)	TO (OUTPUT)	LOAD CAPACITANCE	T_A = 25°C			SN54LV165A		SN74LV165A		UNIT
				MIN	TYP	MAX	MIN	MAX	MIN	MAX	
f_{max}			C_L = 15 pF	65*	115*		55*		55		MHz
			C_L = 50 pF	60	90		50		50		
t_{pd}	CLK	Q_H or $\overline{Q}_H$	C_L = 15 pF		8.6*	15.4*	1*	18*	1	18	ns
	SH/$\overline{LD}$				9.1*	15.8*	1*	18.5*	1	18.5	
	H				8.9*	14.1*	1*	16.5*	1	16.5	
t_{pd}	CLK	Q_H or $\overline{Q}_H$	C_L = 50 pF		10.9	14.9	1	16.9	1	16.9	ns
	SH/$\overline{LD}$				11.3	19.3	1	22	1	22	
	H				11.1	17.6	1	20	1	20	

* On products compliant to MIL-PRF-38535, this parameter is not production tested.

switching characteristics over recommended operating free-air temperature range, V_{CC} = 5 V ± 0.5 V (unless otherwise noted) (see Figure 1)

PARAMETER	FROM (INPUT)	TO (OUTPUT)	LOAD CAPACITANCE	T_A = 25°C			SN54LV165A		SN74LV165A		UNIT
				MIN	TYP	MAX	MIN	MAX	MIN	MAX	
f_{max}			C_L = 15 pF	110*	165*		90*		90		MHz
			C_L = 50 pF	95	125		85		85		
t_{pd}	CLK	Q_H or $\overline{Q}_H$	C_L = 15 pF		6*	9.9*	1*	11.5*	1	11.5	ns
	SH/$\overline{LD}$				6*	9.9*	1*	11.5*	1	11.5	
	H				6*	9*	1*	10.5*	1	10.5	
t_{pd}	CLK	Q_H or $\overline{Q}_H$	C_L = 50 pF		7.7	11.9	1	13.5	1	13.5	ns
	SH/$\overline{LD}$				7.7	11.9	1	13.5	1	13.5	
	H				7.6	11	1	12.5	1	12.5	

* On products compliant to MIL-PRF-38535, this parameter is not production tested.

operating characteristics, T_A = 25°C

PARAMETER	TEST CONDITIONS	V_{CC}	TYP	UNIT
C_{pd} Power dissipation capacitance	C_L = 50 pF, f = 10 MHz	3.3 V	36.1	pF
		5 V	37.5	

PARAMETER MEASUREMENT INFORMATION

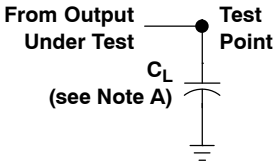

LOAD CIRCUIT FOR
TOTEM-POLE OUTPUTS

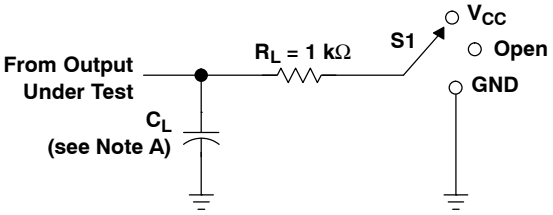

LOAD CIRCUIT FOR
3-STATE AND OPEN-DRAIN OUTPUTS

TEST	S1
t_{PLH}/t_{PHL}	Open
t_{PLZ}/t_{PZL}	V_{CC}
t_{PHZ}/t_{PZH}	GND
Open Drain	V_{CC}

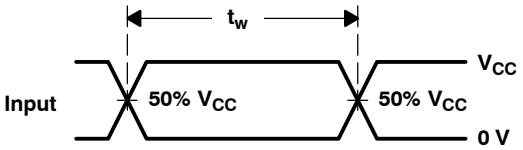

VOLTAGE WAVEFORMS
PULSE DURATION

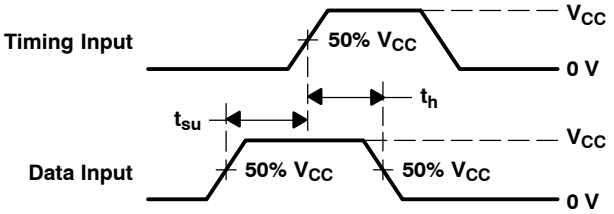

VOLTAGE WAVEFORMS
SETUP AND HOLD TIMES

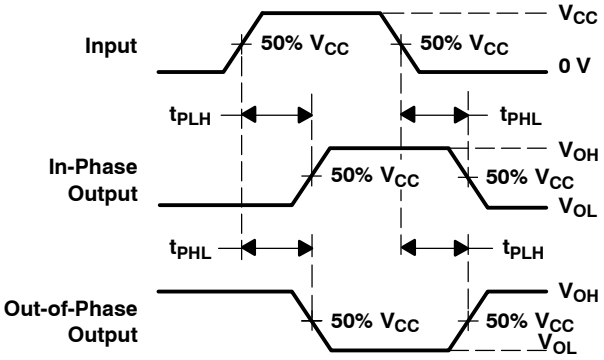

VOLTAGE WAVEFORMS
PROPAGATION DELAY TIMES
INVERTING AND NONINVERTING OUTPUTS

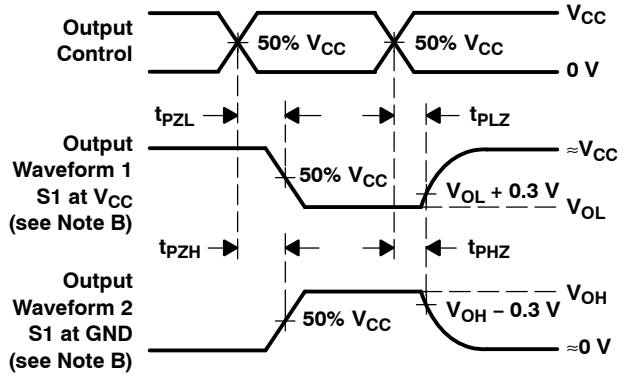

VOLTAGE WAVEFORMS
ENABLE AND DISABLE TIMES
LOW- AND HIGH-LEVEL ENABLING

NOTES:
A. C_L includes probe and jig capacitance.
B. Waveform 1 is for an output with internal conditions such that the output is low, except when disabled by the output control. Waveform 2 is for an output with internal conditions such that the output is high, except when disabled by the output control.
C. All input pulses are supplied by generators having the following characteristics: PRR ≤ 1 MHz, Z_O = 50 Ω, t_r ≤ 3 ns, t_f ≤ 3 ns.
D. The outputs are measured one at a time, with one input transition per measurement.
E. t_{PLZ} and t_{PHZ} are the same as t_{dis}.
F. t_{PZL} and t_{PZH} are the same as t_{en}.
G. t_{PHL} and t_{PLH} are the same as t_{pd}.
H. All parameters and waveforms are not applicable to all devices.

Figure 1. Load Circuit and Voltage Waveforms

PACKAGING INFORMATION

Orderable Device	Status (1)	Package Type	Package Drawing	Pins	Package Qty	Eco Plan (2)	Lead/ Ball Finish	MSL Peak Temp (3)	Samples (Requires Login)
SN74LV165AD	ACTIVE	SOIC	D	16	40	Green (RoHS & no Sb/Br)	CU NIPDAU	Level-1-260C-UNLIM	
SN74LV165ADBR	ACTIVE	SSOP	DB	16	2000	Green (RoHS & no Sb/Br)	CU NIPDAU	Level-1-260C-UNLIM	
SN74LV165ADBRE4	ACTIVE	SSOP	DB	16	2000	Green (RoHS & no Sb/Br)	CU NIPDAU	Level-1-260C-UNLIM	
SN74LV165ADBRG4	ACTIVE	SSOP	DB	16	2000	Green (RoHS & no Sb/Br)	CU NIPDAU	Level-1-260C-UNLIM	
SN74LV165ADE4	ACTIVE	SOIC	D	16	40	Green (RoHS & no Sb/Br)	CU NIPDAU	Level-1-260C-UNLIM	
SN74LV165ADG4	ACTIVE	SOIC	D	16	40	Green (RoHS & no Sb/Br)	CU NIPDAU	Level-1-260C-UNLIM	
SN74LV165ADGVR	ACTIVE	TVSOP	DGV	16	2000	Green (RoHS & no Sb/Br)	CU NIPDAU	Level-1-260C-UNLIM	
SN74LV165ADGVRE4	ACTIVE	TVSOP	DGV	16	2000	Green (RoHS & no Sb/Br)	CU NIPDAU	Level-1-260C-UNLIM	
SN74LV165ADGVRG4	ACTIVE	TVSOP	DGV	16	2000	Green (RoHS & no Sb/Br)	CU NIPDAU	Level-1-260C-UNLIM	
SN74LV165ADR	ACTIVE	SOIC	D	16	2500	Green (RoHS & no Sb/Br)	CU NIPDAU	Level-1-260C-UNLIM	
SN74LV165ADRE4	ACTIVE	SOIC	D	16	2500	Green (RoHS & no Sb/Br)	CU NIPDAU	Level-1-260C-UNLIM	
SN74LV165ADRG3	ACTIVE	SOIC	D	16	2500	Green (RoHS & no Sb/Br)	CU SN	Level-1-260C-UNLIM	
SN74LV165ADRG4	ACTIVE	SOIC	D	16	2500	Green (RoHS & no Sb/Br)	CU NIPDAU	Level-1-260C-UNLIM	
SN74LV165ANSR	ACTIVE	SO	NS	16	2000	Green (RoHS & no Sb/Br)	CU NIPDAU	Level-1-260C-UNLIM	
SN74LV165ANSRE4	ACTIVE	SO	NS	16	2000	Green (RoHS & no Sb/Br)	CU NIPDAU	Level-1-260C-UNLIM	
SN74LV165ANSRG4	ACTIVE	SO	NS	16	2000	Green (RoHS & no Sb/Br)	CU NIPDAU	Level-1-260C-UNLIM	
SN74LV165APW	ACTIVE	TSSOP	PW	16	90	Green (RoHS & no Sb/Br)	CU NIPDAU	Level-1-260C-UNLIM	

Orderable Device	Status (1)	Package Type	Package Drawing	Pins	Package Qty	Eco Plan (2)	Lead/ Ball Finish	MSL Peak Temp (3)	Samples (Requires Login)
SN74LV165APWE4	ACTIVE	TSSOP	PW	16	90	Green (RoHS & no Sb/Br)	CU NIPDAU	Level-1-260C-UNLIM	
SN74LV165APWG4	ACTIVE	TSSOP	PW	16	90	Green (RoHS & no Sb/Br)	CU NIPDAU	Level-1-260C-UNLIM	
SN74LV165APWR	ACTIVE	TSSOP	PW	16	2000	Green (RoHS & no Sb/Br)	CU NIPDAU	Level-1-260C-UNLIM	
SN74LV165APWRE4	ACTIVE	TSSOP	PW	16	2000	Green (RoHS & no Sb/Br)	CU NIPDAU	Level-1-260C-UNLIM	
SN74LV165APWRG3	ACTIVE	TSSOP	PW	16	2000	Green (RoHS & no Sb/Br)	CU SN	Level-1-260C-UNLIM	
SN74LV165APWRG4	ACTIVE	TSSOP	PW	16	2000	Green (RoHS & no Sb/Br)	CU NIPDAU	Level-1-260C-UNLIM	
SN74LV165APWT	ACTIVE	TSSOP	PW	16	250	Green (RoHS & no Sb/Br)	CU NIPDAU	Level-1-260C-UNLIM	
SN74LV165APWTE4	ACTIVE	TSSOP	PW	16	250	Green (RoHS & no Sb/Br)	CU NIPDAU	Level-1-260C-UNLIM	
SN74LV165APWTG4	ACTIVE	TSSOP	PW	16	250	Green (RoHS & no Sb/Br)	CU NIPDAU	Level-1-260C-UNLIM	
SN74LV165ARGYR	ACTIVE	VQFN	RGY	16	3000	Green (RoHS & no Sb/Br)	CU NIPDAU	Level-2-260C-1 YEAR	
SN74LV165ARGYRG4	ACTIVE	VQFN	RGY	16	3000	Green (RoHS & no Sb/Br)	CU NIPDAU	Level-2-260C-1 YEAR	

(1) The marketing status values are defined as follows:
ACTIVE: Product device recommended for new designs.
LIFEBUY: TI has announced that the device will be discontinued, and a lifetime-buy period is in effect.
NRND: Not recommended for new designs. Device is in production to support existing customers, but TI does not recommend using this part in a new design.
PREVIEW: Device has been announced but is not in production. Samples may or may not be available.
OBSOLETE: TI has discontinued the production of the device.

(2) Eco Plan - The planned eco-friendly classification: Pb-Free (RoHS), Pb-Free (RoHS Exempt), or Green (RoHS & no Sb/Br) - please check http://www.ti.com/productcontent for the latest availability information and additional product content details.
TBD: The Pb-Free/Green conversion plan has not been defined.
Pb-Free (RoHS): TI's terms "Lead-Free" or "Pb-Free" mean semiconductor products that are compatible with the current RoHS requirements for all 6 substances, including the requirement that lead not exceed 0.1% by weight in homogeneous materials. Where designed to be soldered at high temperatures, TI Pb-Free products are suitable for use in specified lead-free processes.
Pb-Free (RoHS Exempt): This component has a RoHS exemption for either 1) lead-based flip-chip solder bumps used between the die and package, or 2) lead-based die adhesive used between the die and leadframe. The component is otherwise considered Pb-Free (RoHS compatible) as defined above.

Green (RoHS & no Sb/Br): TI defines "Green" to mean Pb-Free (RoHS compatible), and free of Bromine (Br) and Antimony (Sb) based flame retardants (Br or Sb do not exceed 0.1% by weight in homogeneous material)

[(3)] MSL, Peak Temp. -- The Moisture Sensitivity Level rating according to the JEDEC industry standard classifications, and peak solder temperature.

Important Information and Disclaimer: The information provided on this page represents TI's knowledge and belief as of the date that it is provided. TI bases its knowledge and belief on information provided by third parties, and makes no representation or warranty as to the accuracy of such information. Efforts are underway to better integrate information from third parties. TI has taken and continues to take reasonable steps to provide representative and accurate information but may not have conducted destructive testing or chemical analysis on incoming materials and chemicals. TI and TI suppliers consider certain information to be proprietary, and thus CAS numbers and other limited information may not be available for release.

In no event shall TI's liability arising out of such information exceed the total purchase price of the TI part(s) at issue in this document sold by TI to Customer on an annual basis.

OTHER QUALIFIED VERSIONS OF SN74LV165A :

- Enhanced Product: SN74LV165A-EP

NOTE: Qualified Version Definitions:

- Enhanced Product - Supports Defense, Aerospace and Medical Applications

TAPE AND REEL INFORMATION

REEL DIMENSIONS

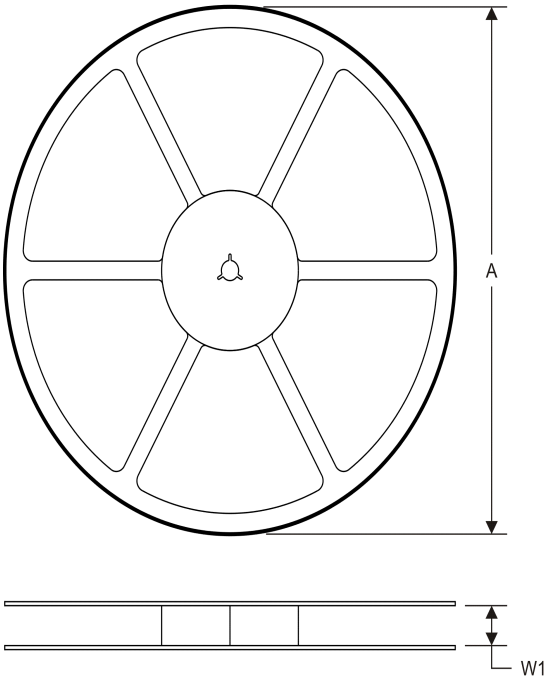

TAPE DIMENSIONS

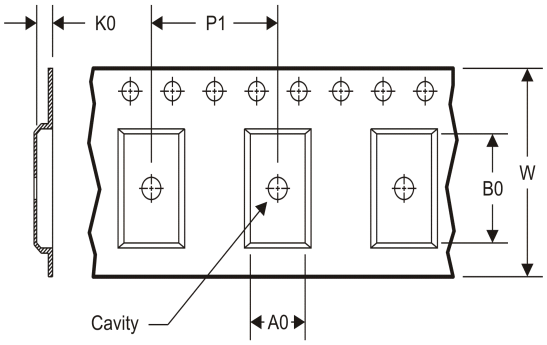

A0	Dimension designed to accommodate the component width
B0	Dimension designed to accommodate the component length
K0	Dimension designed to accommodate the component thickness
W	Overall width of the carrier tape
P1	Pitch between successive cavity centers

TAPE AND REEL INFORMATION

*All dimensions are nominal

Device	Package Type	Package Drawing	Pins	SPQ	Reel Diameter (mm)	Reel Width W1 (mm)	A0 (mm)	B0 (mm)	K0 (mm)	P1 (mm)	W (mm)	Pin1 Quadrant
SN74LV165ADBR	SSOP	DB	16	2000	330.0	16.4	8.2	6.6	2.5	12.0	16.0	Q1
SN74LV165ADGVR	TVSOP	DGV	16	2000	330.0	12.4	6.8	4.0	1.6	8.0	12.0	Q1
SN74LV165ADRG4	SOIC	D	16	2500	330.0	16.4	6.5	10.3	2.1	8.0	16.0	Q1
SN74LV165ANSR	SO	NS	16	2000	330.0	16.4	8.2	10.5	2.5	12.0	16.0	Q1
SN74LV165APWR	TSSOP	PW	16	2000	330.0	12.4	7.0	5.6	1.6	8.0	12.0	Q1
SN74LV165APWR	TSSOP	PW	16	2000	330.0	12.4	6.9	5.6	1.6	8.0	12.0	Q1
SN74LV165APWRG3	TSSOP	PW	16	2000	330.0	12.4	7.0	5.6	1.6	8.0	12.0	Q1
SN74LV165APWRG4	TSSOP	PW	16	2000	330.0	12.4	6.9	5.6	1.6	8.0	12.0	Q1
SN74LV165APWT	TSSOP	PW	16	250	330.0	12.4	6.9	5.6	1.6	8.0	12.0	Q1
SN74LV165ARGYR	VQFN	RGY	16	3000	330.0	12.4	3.8	4.3	1.5	8.0	12.0	Q1

TAPE AND REEL BOX DIMENSIONS

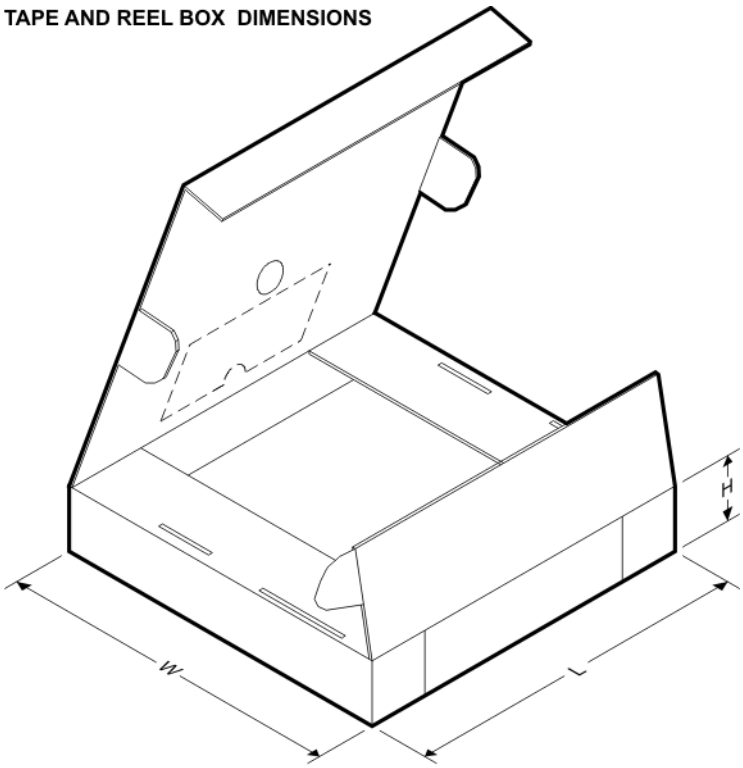

*All dimensions are nominal

Device	Package Type	Package Drawing	Pins	SPQ	Length (mm)	Width (mm)	Height (mm)
SN74LV165ADBR	SSOP	DB	16	2000	367.0	367.0	38.0
SN74LV165ADGVR	TVSOP	DGV	16	2000	367.0	367.0	35.0
SN74LV165ADRG4	SOIC	D	16	2500	333.2	345.9	28.6
SN74LV165ANSR	SO	NS	16	2000	367.0	367.0	38.0
SN74LV165APWR	TSSOP	PW	16	2000	364.0	364.0	27.0
SN74LV165APWR	TSSOP	PW	16	2000	367.0	367.0	35.0
SN74LV165APWRG3	TSSOP	PW	16	2000	364.0	364.0	27.0
SN74LV165APWRG4	TSSOP	PW	16	2000	367.0	367.0	35.0
SN74LV165APWT	TSSOP	PW	16	250	367.0	367.0	35.0
SN74LV165ARGYR	VQFN	RGY	16	3000	367.0	367.0	35.0

DGV (R-PDSO-G)** **PLASTIC SMALL-OUTLINE**

24 PINS SHOWN

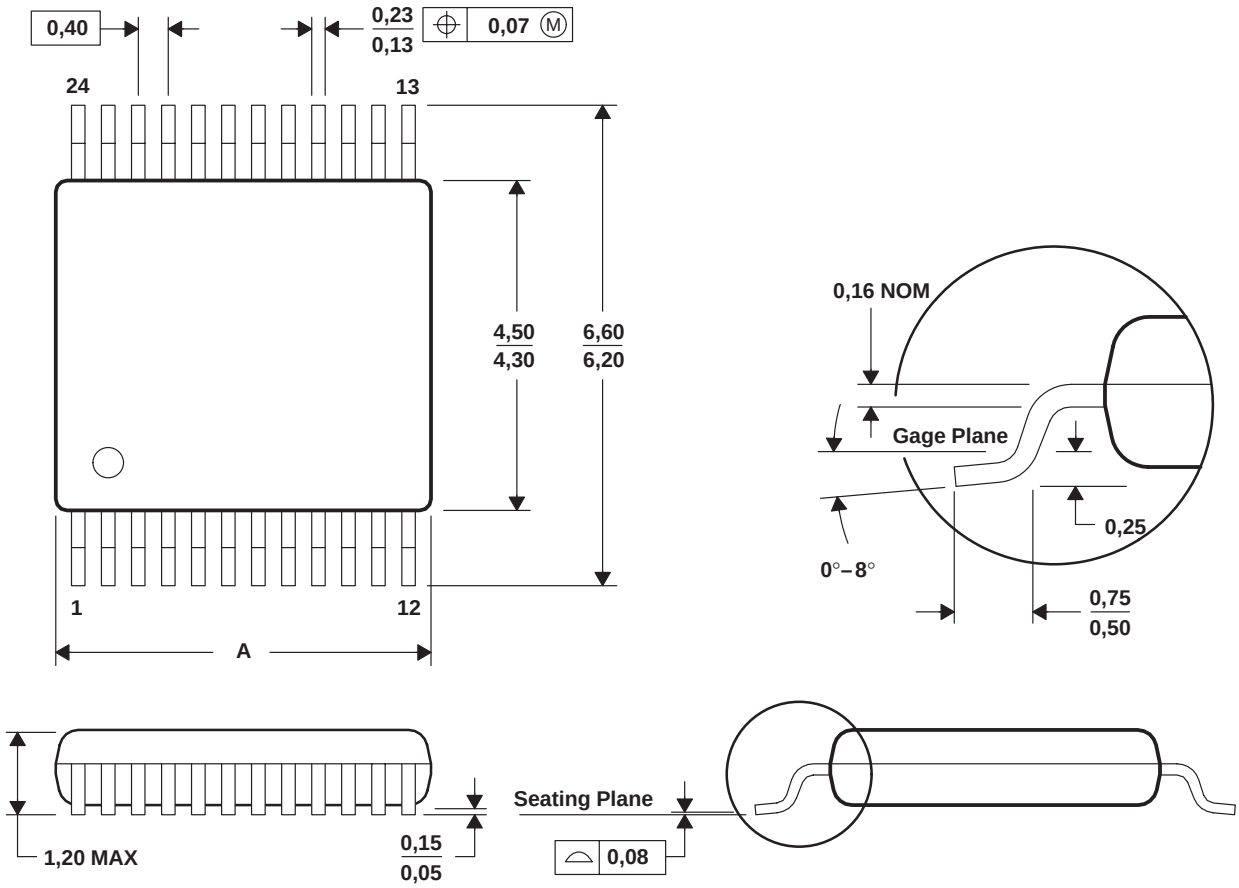

DIM \ PINS **	14	16	20	24	38	48	56
A MAX	3,70	3,70	5,10	5,10	7,90	9,80	11,40
A MIN	3,50	3,50	4,90	4,90	7,70	9,60	11,20

4073251/E 08/00

NOTES: A. All linear dimensions are in millimeters.
B. This drawing is subject to change without notice.
C. Body dimensions do not include mold flash or protrusion, not to exceed 0,15 per side.
D. Falls within JEDEC: 24/48 Pins – MO-153
14/16/20/56 Pins – MO-194

D (R–PDSO–G16) PLASTIC SMALL OUTLINE

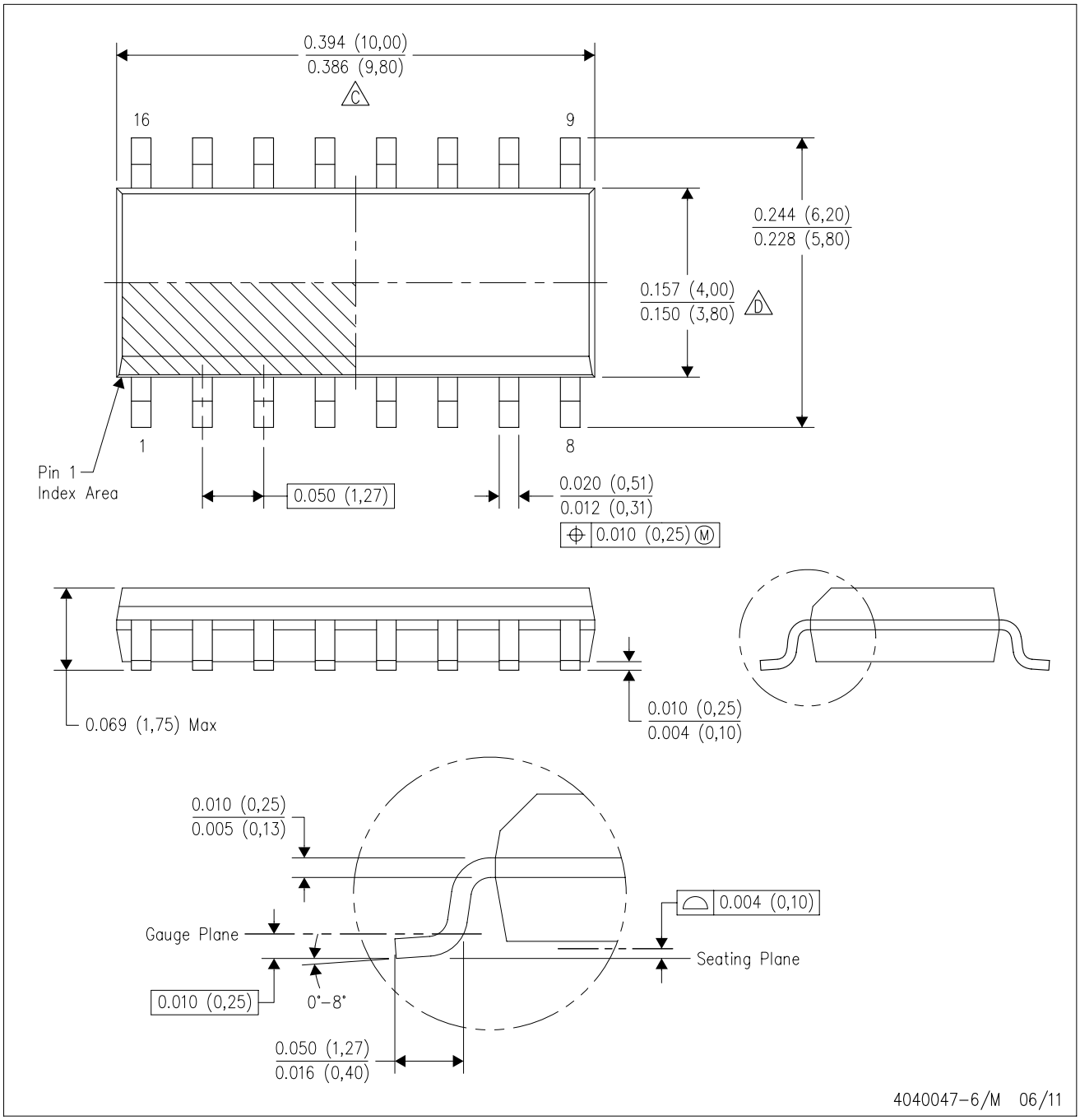

NOTES:
A. All linear dimensions are in inches (millimeters).
B. This drawing is subject to change without notice.
C. Body length does not include mold flash, protrusions, or gate burrs. Mold flash, protrusions, or gate burrs shall not exceed 0.006 (0,15) each side.
D. Body width does not include interlead flash. Interlead flash shall not exceed 0.017 (0,43) each side.
E. Reference JEDEC MS–012 variation AC.

PW (R–PDSO–G16) PLASTIC SMALL OUTLINE

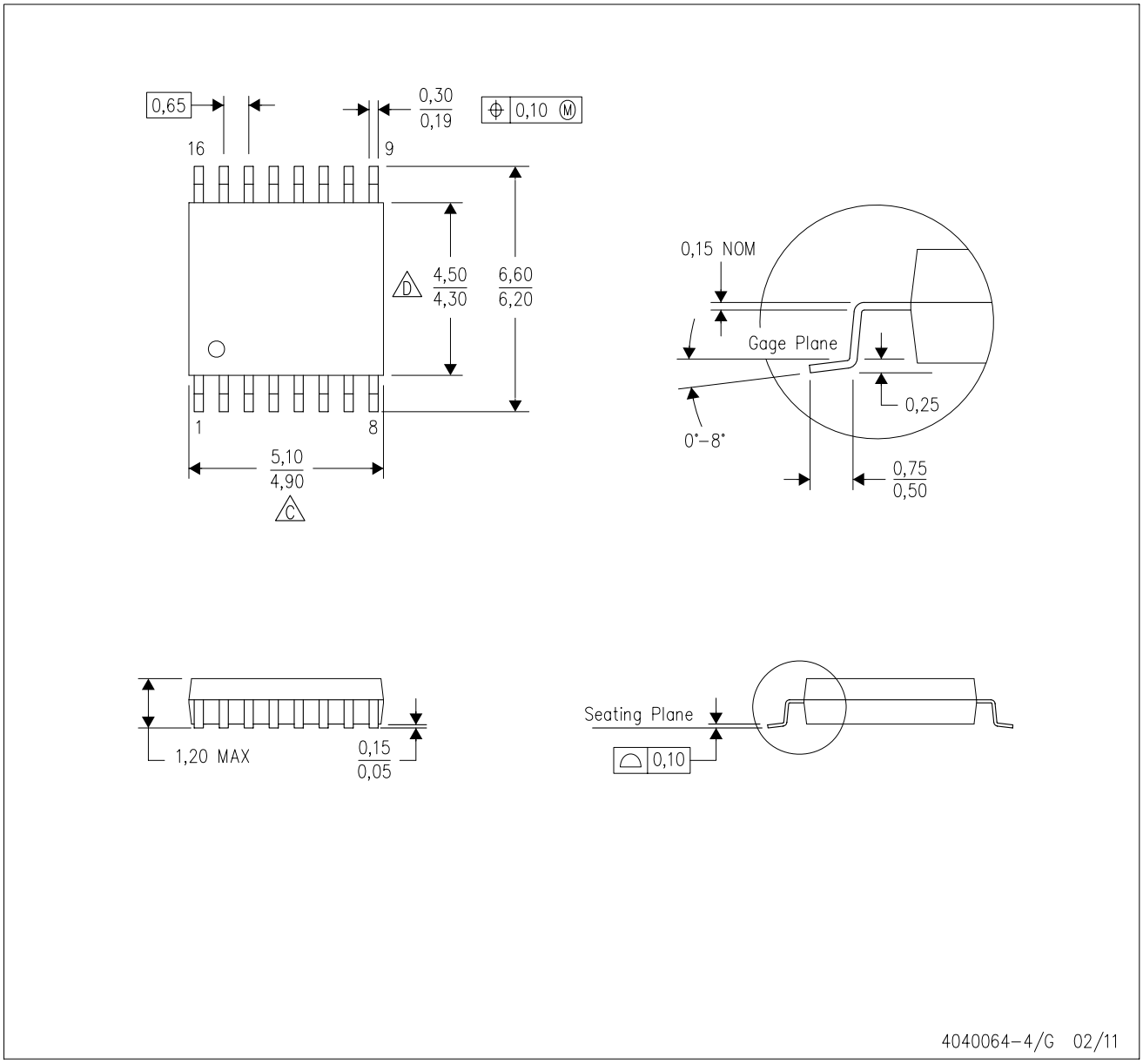

NOTES:
A. All linear dimensions are in millimeters. Dimensioning and tolerancing per ASME Y14.5M–1994.
B. This drawing is subject to change without notice.
C. Body length does not include mold flash, protrusions, or gate burrs. Mold flash, protrusions, or gate burrs shall not exceed 0,15 each side.
D. Body width does not include interlead flash. Interlead flash shall not exceed 0,25 each side.
E. Falls within JEDEC MO–153

PW (R–PDSO–G16) PLASTIC SMALL OUTLINE

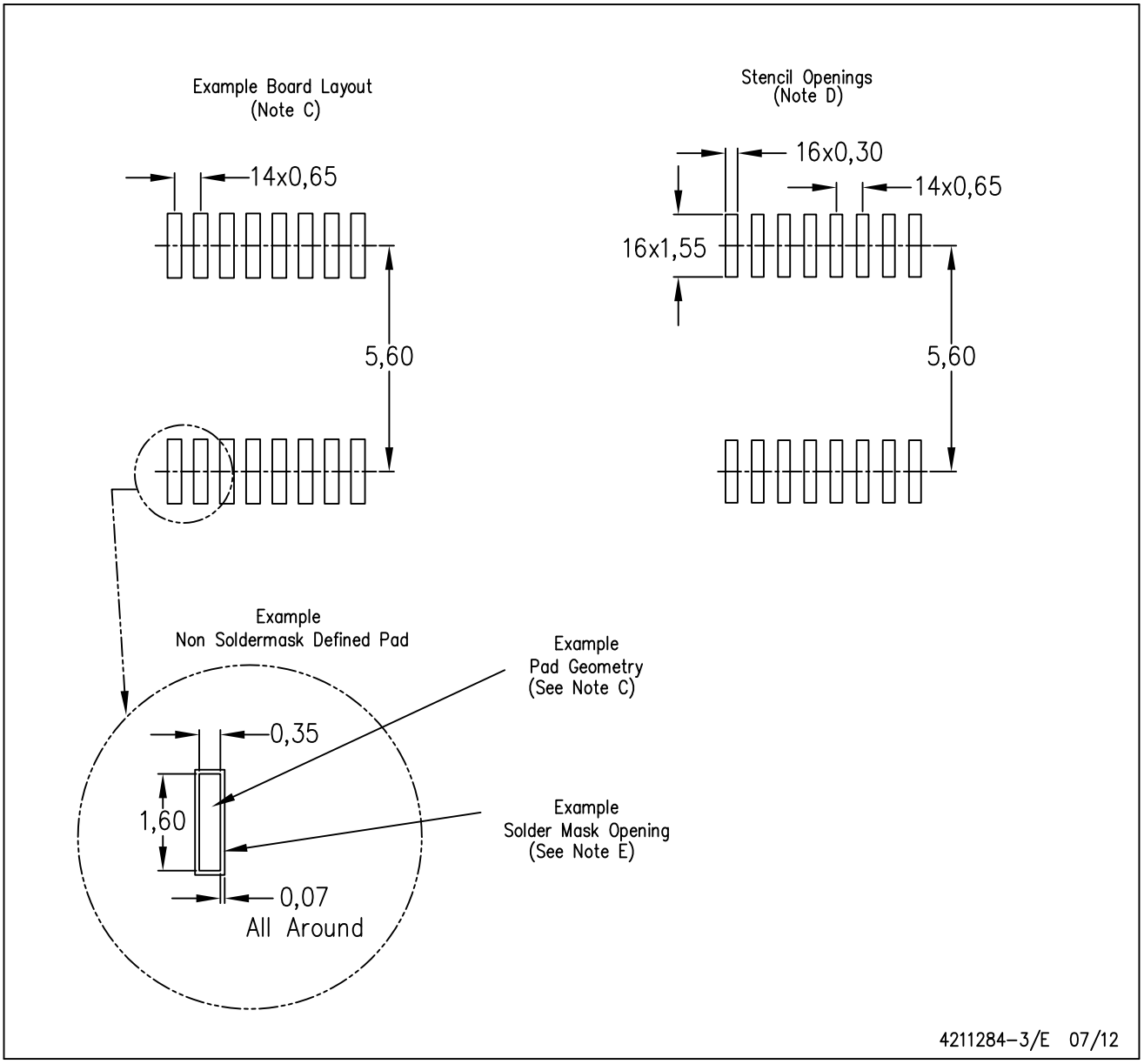

NOTES:
A. All linear dimensions are in millimeters.
B. This drawing is subject to change without notice.
C. Publication IPC–7351 is recommended for alternate designs.
D. Laser cutting apertures with trapezoidal walls and also rounding corners will offer better paste release. Customers should contact their board assembly site for stencil design recommendations. Refer to IPC–7525 for other stencil recommendations.
E. Customers should contact their board fabrication site for solder mask tolerances between and around signal pads.

RGY (R-PVQFN-N16) PLASTIC QUAD FLATPACK NO-LEAD

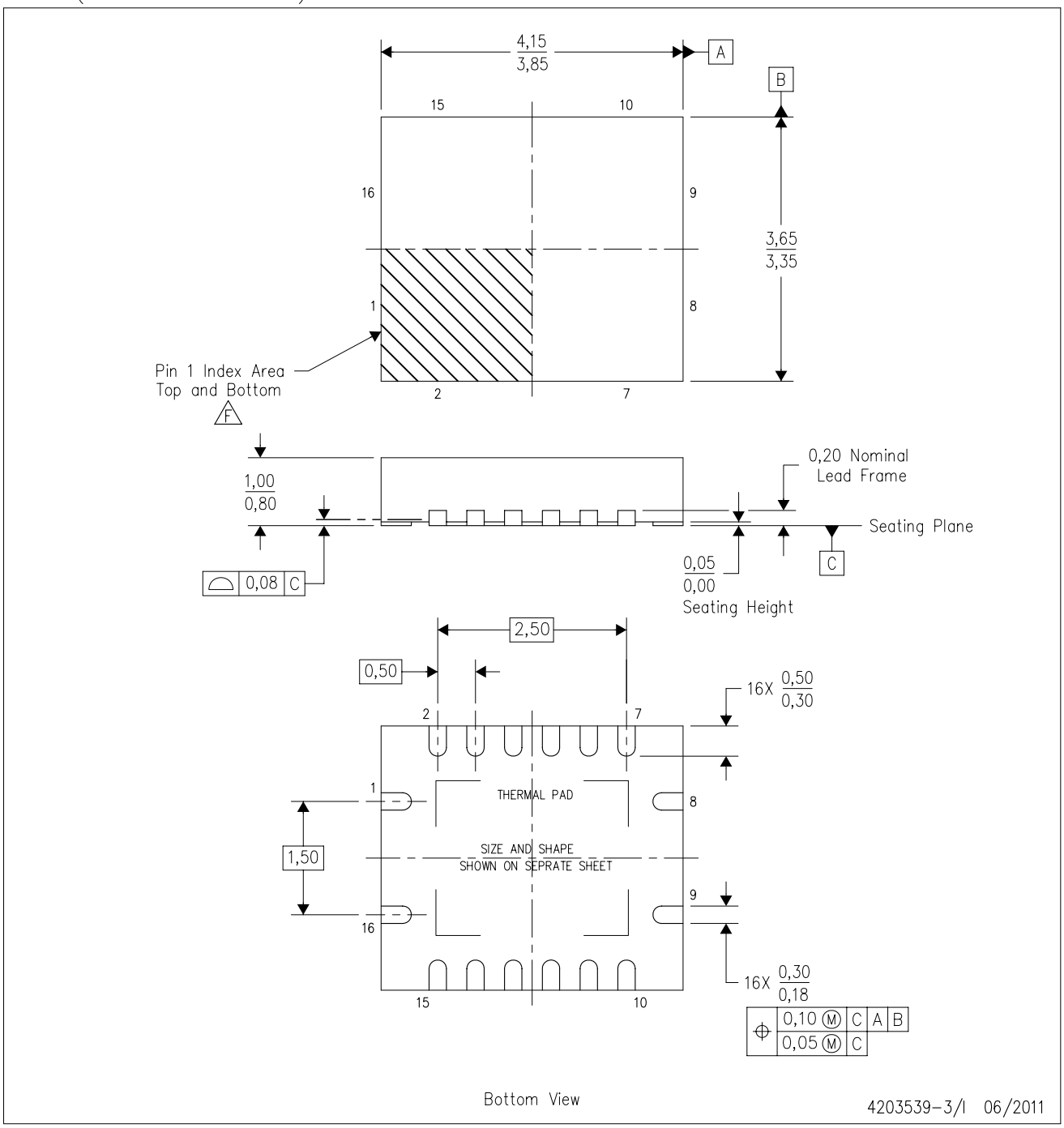

NOTES:
- A. All linear dimensions are in millimeters. Dimensioning and tolerancing per ASME Y14.5M-1994.
- B. This drawing is subject to change without notice.
- C. QFN (Quad Flatpack No-Lead) package configuration.
- D. The package thermal pad must be soldered to the board for thermal and mechanical performance.
- E. See the additional figure in the Product Data Sheet for details regarding the exposed thermal pad features and dimensions.
- F. Pin 1 identifiers are located on both top and bottom of the package and within the zone indicated. The Pin 1 identifiers are either a molded, marked, or metal feature.
- G. Package complies to JEDEC MO-241 variation BA.

RGY (R–PVQFN–N16) PLASTIC QUAD FLATPACK NO–LEAD

THERMAL INFORMATION

This package incorporates an exposed thermal pad that is designed to be attached directly to an external heatsink. The thermal pad must be soldered directly to the printed circuit board (PCB). After soldering, the PCB can be used as a heatsink. In addition, through the use of thermal vias, the thermal pad can be attached directly to the appropriate copper plane shown in the electrical schematic for the device, or alternatively, can be attached to a special heatsink structure designed into the PCB. This design optimizes the heat transfer from the integrated circuit (IC).

For information on the Quad Flatpack No–Lead (QFN) package and its advantages, refer to Application Report, QFN/SON PCB Attachment, Texas Instruments Literature No. SLUA271. This document is available at www.ti.com.

The exposed thermal pad dimensions for this package are shown in the following illustration.

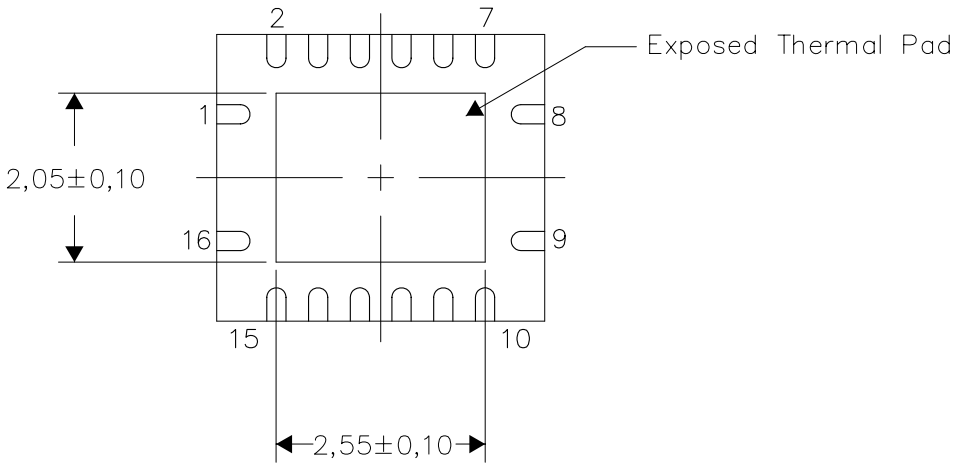

Bottom View

Exposed Thermal Pad Dimensions

4206353–3/0 11/11

NOTE: All linear dimensions are in millimeters

RGY (R–PVQFN–N16) PLASTIC QUAD FLATPACK NO–LEAD

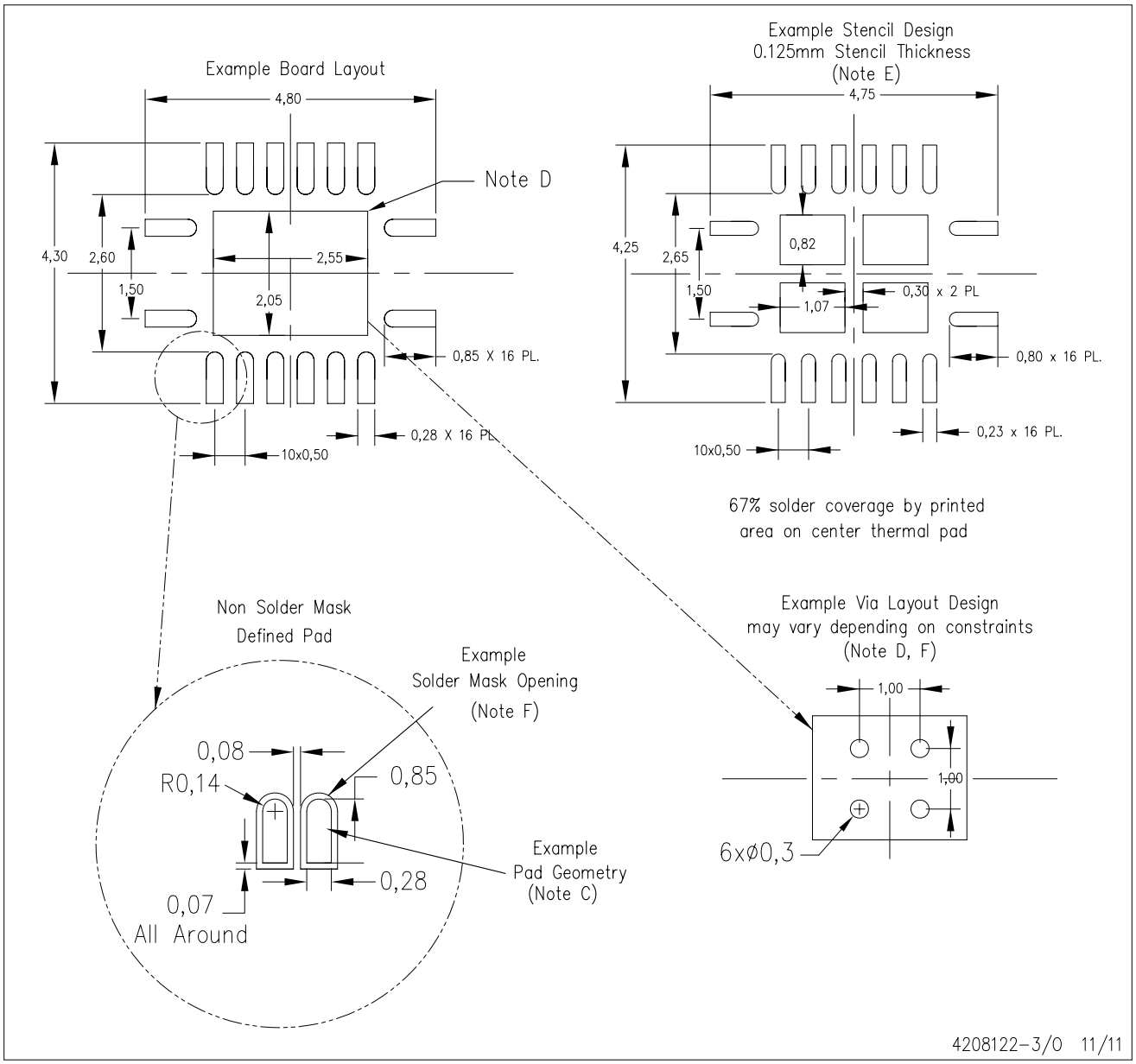

NOTES:
A. All linear dimensions are in millimeters.
B. This drawing is subject to change without notice.
C. Publication IPC–7351 is recommended for alternate designs.
D. This package is designed to be soldered to a thermal pad on the board. Refer to Application Note, Quad Flat–Pack QFN/SON PCB Attachment, Texas Instruments Literature No. SLUA271, and also the Product Data Sheets for specific thermal information, via requirements, and recommended board layout. These documents are available at www.ti.com <http://www.ti.com>.
E. Laser cutting apertures with trapezoidal walls and also rounding corners will offer better paste release. Customers should contact their board assembly site for stencil design recommendations. Refer to IPC 7525 for stencil design considerations.
F. Customers should contact their board fabrication site for minimum solder mask web tolerances between signal pads.

MECHANICAL DATA

NS (R-PDSO-G)** **PLASTIC SMALL-OUTLINE PACKAGE**

14-PINS SHOWN

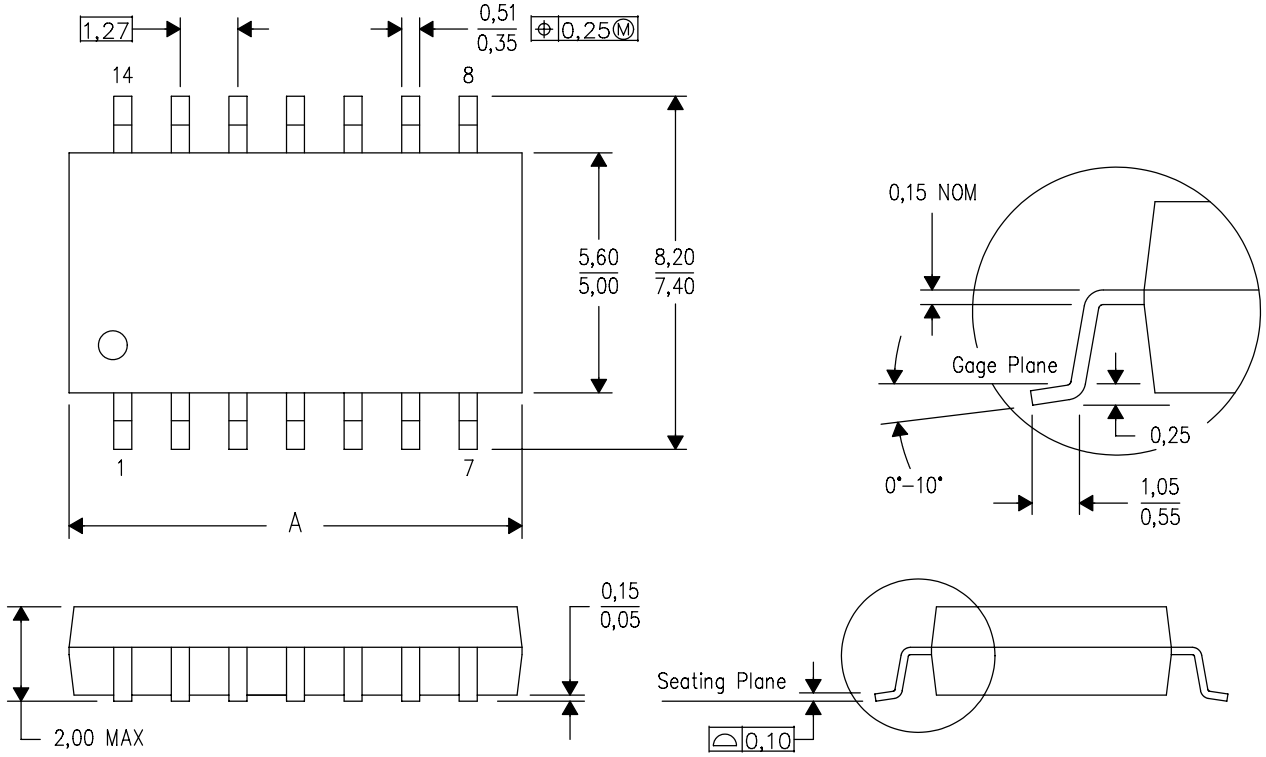

DIM \ PINS **	14	16	20	24
A MAX	10,50	10,50	12,90	15,30
A MIN	9,90	9,90	12,30	14,70

4040062/C 03/03

NOTES:
A. All linear dimensions are in millimeters.
B. This drawing is subject to change without notice.
C. Body dimensions do not include mold flash or protrusion, not to exceed 0,15.

DB (R-PDSO-G)** **PLASTIC SMALL-OUTLINE**

28 PINS SHOWN

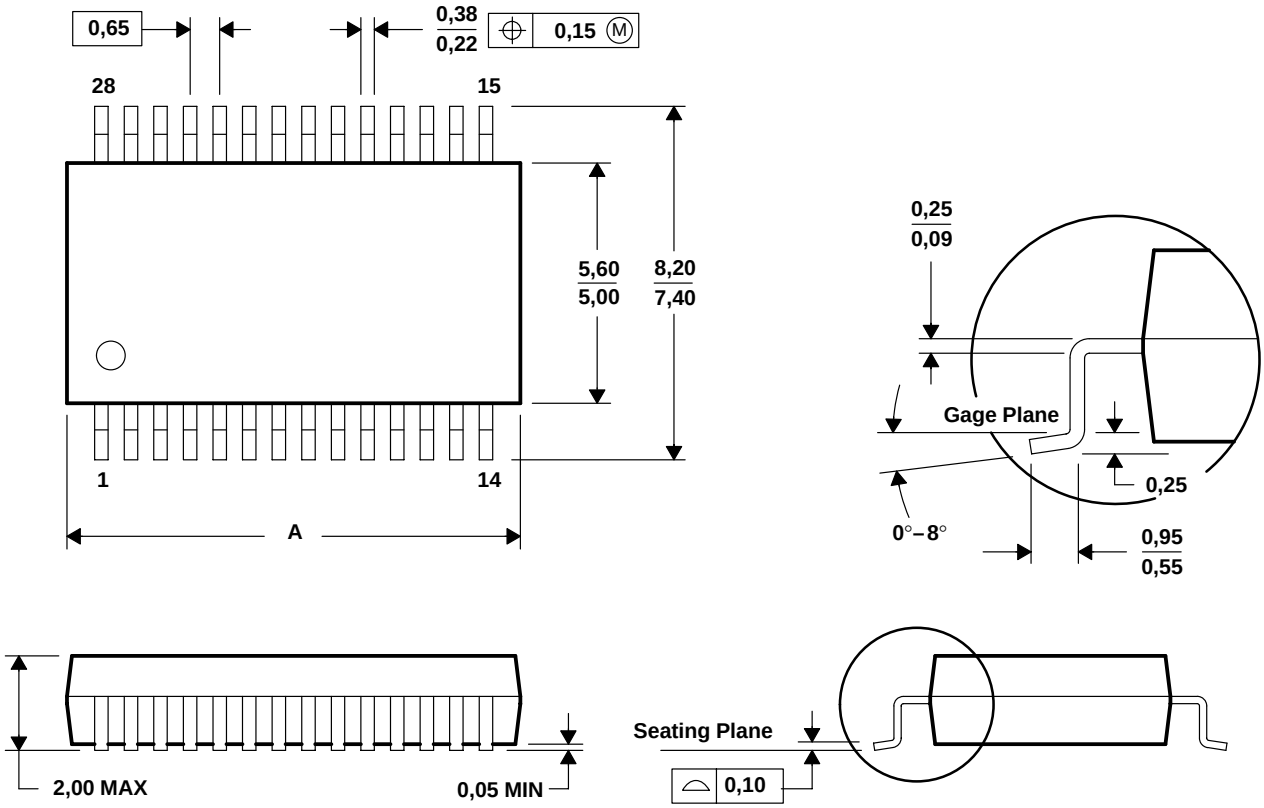

DIM \ PINS **	14	16	20	24	28	30	38
A MAX	6,50	6,50	7,50	8,50	10,50	10,50	12,90
A MIN	5,90	5,90	6,90	7,90	9,90	9,90	12,30

4040065 /E 12/01

NOTES: A. All linear dimensions are in millimeters.
B. This drawing is subject to change without notice.
C. Body dimensions do not include mold flash or protrusion not to exceed 0,15.
D. Falls within JEDEC MO-150

IMPORTANT NOTICE

Texas Instruments Incorporated and its subsidiaries (TI) reserve the right to make corrections, enhancements, improvements and other changes to its semiconductor products and services per JESD46C and to discontinue any product or service per JESD48B. Buyers should obtain the latest relevant information before placing orders and should verify that such information is current and complete. All semiconductor products (also referred to herein as “components”) are sold subject to TI’s terms and conditions of sale supplied at the time of order acknowledgment.

TI warrants performance of its components to the specifications applicable at the time of sale, in accordance with the warranty in TI’s terms and conditions of sale of semiconductor products. Testing and other quality control techniques are used to the extent TI deems necessary to support this warranty. Except where mandated by applicable law, testing of all parameters of each component is not necessarily performed.

TI assumes no liability for applications assistance or the design of Buyers’ products. Buyers are responsible for their products and applications using TI components. To minimize the risks associated with Buyers’ products and applications, Buyers should provide adequate design and operating safeguards.

TI does not warrant or represent that any license, either express or implied, is granted under any patent right, copyright, mask work right, or other intellectual property right relating to any combination, machine, or process in which TI components or services are used. Information published by TI regarding third-party products or services does not constitute a license to use such products or services or a warranty or endorsement thereof. Use of such information may require a license from a third party under the patents or other intellectual property of the third party, or a license from TI under the patents or other intellectual property of TI.

Reproduction of significant portions of TI information in TI data books or data sheets is permissible only if reproduction is without alteration and is accompanied by all associated warranties, conditions, limitations, and notices. TI is not responsible or liable for such altered documentation. Information of third parties may be subject to additional restrictions.

Resale of TI components or services with statements different from or beyond the parameters stated by TI for that component or service voids all express and any implied warranties for the associated TI component or service and is an unfair and deceptive business practice. TI is not responsible or liable for any such statements.

Buyer acknowledges and agrees that it is solely responsible for compliance with all legal, regulatory and safety-related requirements concerning its products, and any use of TI components in its applications, notwithstanding any applications-related information or support that may be provided by TI. Buyer represents and agrees that it has all the necessary expertise to create and implement safeguards which anticipate dangerous consequences of failures, monitor failures and their consequences, lessen the likelihood of failures that might cause harm and take appropriate remedial actions. Buyer will fully indemnify TI and its representatives against any damages arising out of the use of any TI components in safety-critical applications.

In some cases, TI components may be promoted specifically to facilitate safety-related applications. With such components, TI’s goal is to help enable customers to design and create their own end-product solutions that meet applicable functional safety standards and requirements. Nonetheless, such components are subject to these terms.

No TI components are authorized for use in FDA Class III (or similar life-critical medical equipment) unless authorized officers of the parties have executed a special agreement specifically governing such use.

Only those TI components which TI has specifically designated as military grade or “enhanced plastic” are designed and intended for use in military/aerospace applications or environments. Buyer acknowledges and agrees that any military or aerospace use of TI components which have ***not*** been so designated is solely at the Buyer's risk, and that Buyer is solely responsible for compliance with all legal and regulatory requirements in connection with such use.

TI has specifically designated certain components which meet ISO/TS16949 requirements, mainly for automotive use. Components which have not been so designated are neither designed nor intended for automotive use; and TI will not be responsible for any failure of such components to meet such requirements.

Products		**Applications**	
Audio	www.ti.com/audio	Automotive and Transportation	www.ti.com/automotive
Amplifiers	amplifier.ti.com	Communications and Telecom	www.ti.com/communications
Data Converters	dataconverter.ti.com	Computers and Peripherals	www.ti.com/computers
DLP® Products	www.dlp.com	Consumer Electronics	www.ti.com/consumer-apps
DSP	dsp.ti.com	Energy and Lighting	www.ti.com/energy
Clocks and Timers	www.ti.com/clocks	Industrial	www.ti.com/industrial
Interface	interface.ti.com	Medical	www.ti.com/medical
Logic	logic.ti.com	Security	www.ti.com/security
Power Mgmt	power.ti.com	Space, Avionics and Defense	www.ti.com/space-avionics-defense
Microcontrollers	microcontroller.ti.com	Video and Imaging	www.ti.com/video
RFID	www.ti-rfid.com		
OMAP Mobile Processors	www.ti.com/omap	**TI E2E Community**	e2e.ti.com
Wireless Connectivity	www.ti.com/wirelessconnectivity		

Mailing Address: Texas Instruments, Post Office Box 655303, Dallas, Texas 75265
Copyright © 2012, Texas Instruments Incorporated

Компания «ЭлектроПласт» предлагает заключение долгосрочных отношений при поставках импортных электронных компонентов на взаимовыгодных условиях!

Наши преимущества:

- Оперативные поставки широкого спектра электронных компонентов отечественного и импортного производства напрямую от производителей и с крупнейших мировых складов;
- Поставка более 17-ти миллионов наименований электронных компонентов;
- Поставка сложных, дефицитных, либо снятых с производства позиций;
- Оперативные сроки поставки под заказ (от 5 рабочих дней);
- Экспресс доставка в любую точку России;
- Техническая поддержка проекта, помощь в подборе аналогов, поставка прототипов;
- Система менеджмента качества сертифицирована по Международному стандарту ISO 9001;
- Лицензия ФСБ на осуществление работ с использованием сведений, составляющих государственную тайну;
- Поставка специализированных компонентов (Xilinx, Altera, Analog Devices, Intersil, Interpoint, Microsemi, Aeroflex, Peregrine, Syfer, Eurofarad, Texas Instrument, Miteq, Cobham, E2V, MA-COM, Hittite, Mini-Circuits,General Dynamics и др.);

Помимо этого, одним из направлений компании «ЭлектроПласт» является направление «Источники питания». Мы предлагаем Вам помощь Конструкторского отдела:

- Подбор оптимального решения, техническое обоснование при выборе компонента;
- Подбор аналогов;
- Консультации по применению компонента;
- Поставка образцов и прототипов;
- Техническая поддержка проекта;
- Защита от снятия компонента с производства.

Как с нами связаться

Телефон: 8 (812) 309 58 32 (многоканальный)
Факс: 8 (812) 320-02-42
Электронная почта: org@eplast1.ru
Адрес: 198099, г. Санкт-Петербург, ул. Калинина, дом 2, корпус 4, литера А.