# HCNR200 and HCNR201

## High-Linearity Analog Optocouplers

# Data Sheet

**Lead (Pb) Free**
RoHS 6 fully compliant

RoHS 6 fully compliant options available; -xxxE denotes a lead-free product

### Description

The HCNR200/201 high-linearity analog optocoupler consists of a high-performance AlGaAs LED that illuminates two closely matched photodiodes. The input photodiode can be used to monitor, and therefore stabilize, the light output of the LED. As a result, the non-linearity and drift characteristics of the LED can be virtually eliminated. The output photodiode produces a photocurrent that is linearly related to the light output of the LED. The close matching of the photo-diodes and advanced design of the package ensure the high linearity and stable gain characteristics of the optocoupler.

The HCNR200/201 can be used to isolate analog signals in a wide variety of applications that require good stability, linearity, bandwidth and low cost. The HCNR200/201 is very flexible and, by appropriate design of the application circuit, is capable of operating in many different modes, including: unipolar/bipolar, ac/dc and inverting/non-inverting. The HCNR200/201 is an excellent solution for many analog isolation problems.

### Schematic

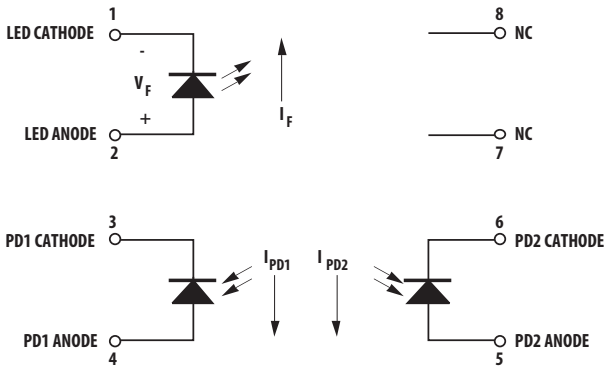


### Features

- Low nonlinearity: 0.01%
- $K_3$ ($I_{PD2}/I_{PD1}$) transfer gain
  HCNR200: ±15%
  HCNR201: ±5%
- Low gain temperature coefficient: -65 ppm/°C
- Wide bandwidth – DC to >1 MHz
- Worldwide safety approval
  - UL 1577 recognized (5 kV rms/1 min rating)
  - CSA approved
  - IEC/EN/DIN EN 60747-5-2 approved
    $V_{IORM}$ = 1414 $V_{peak}$ (option #050)
- Surface mount option available (Option #300)
- 8-Pin DIP package - 0.400" spacing
- Allows flexible circuit design

### Applications

- Low cost analog isolation
- Telecom: Modem, PBX
- Industrial process control:
  Transducer isolator
  Isolator for thermocouples 4 mA to 20 mA loop isolation
- SMPS feedback loop, SMPS feedforward
- Monitor motor supply voltage
- Medical

*CAUTION: It is advised that normal static precautions be taken in handling and assembly of this component to prevent damage and/or degradation which may be induced by ESD.*

## Ordering Information

HCNR200/HCNR201 is UL Recognized with 5000 Vrms for 1 minute per UL1577.

| Part Number | Option: RoHS Compliant | Option: non RoHS Compliant | Package | Surface Mount | Gull Wing | Tape & Reel | UL 5000 Vrms/ 1 Minute rating | IEC/EN/DIN EN 60747-5-2 $V_{IORM}$ = 1414 $V_{peak}$ | Quantity |
|---|---|---|---|---|---|---|---|---|---|
| | -000E | no option | 400 mil | | | | X | | 42 per tube |
| | -300E | #300 | Widebody | X | X | | X | | 42 per tube |
| HCNR200 | -500E | #500 | DIP-8 | X | X | X | X | | 750 per reel |
| HCNR201 | -050E | #050 | | | | | X | X | 42 per tube |
| | -350E | #350 | | X | X | | X | X | 42 per tube |
| | -550E | #550 | | X | X | X | X | X | 750 per reel |

To order, choose a part number from the part number column and combine with the desired option from the option column to form an order entry.

Example 1:
HCNR200-550E to order product of Gull Wing Surface Mount package in Tape and Reel packaging with IEC/EN/DIN EN 60747-5-2 $V_{IORM}$ = 1414 $V_{peak}$ Safety Approval and UL 5000 Vrms for 1 minute rating and RoHS compliant.

Example 2:
HCNR201 to order product of 8-Pin Widebody DIP package in Tube packaging with UL 5000 Vrms for 1 minute rating and non RoHS compliant.

Option datasheets are available. Contact your Avago sales representative or authorized distributor for information.

Remarks: The notation '#XXX' is used for existing products, while (new) products launched since July 15, 2001 and RoHS compliant will use '–XXXE.'

## Package Outline Drawings

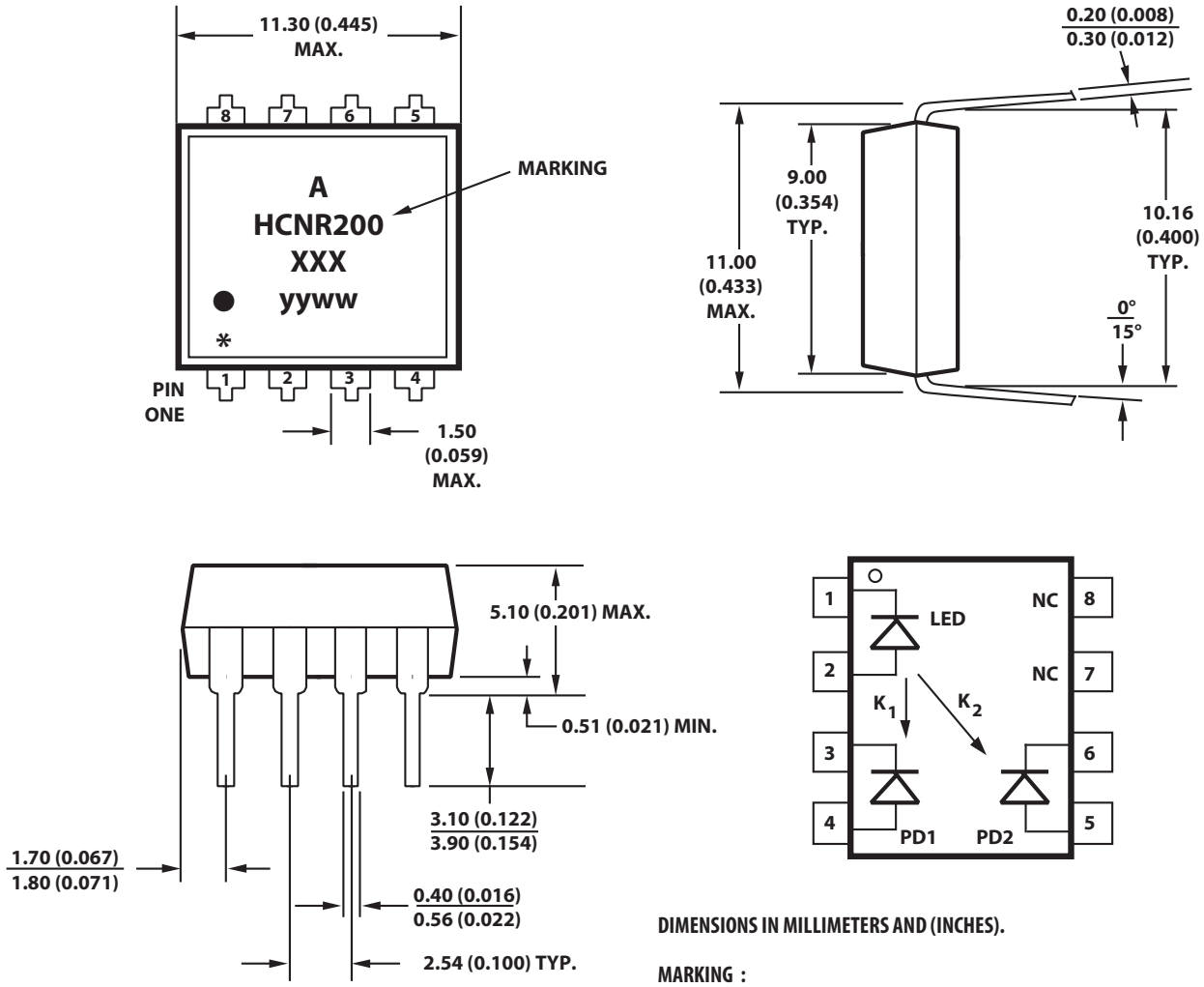


DIMENSIONS IN MILLIMETERS AND (INCHES).

MARKING :
XXX = 050 ONLY if option #050,#350,#550 (or -050,-350,-550) ordered (otherwise blank)
yy - Year
ww - Work Week
Marked with black dot - Designates Lead Free option E
* - Designates pin 1

NOTE: FLOATING LEAD PROTRUSION IS 0.25 mm (10 mils) MAX.

Figure 1a. 8 PIN DIP

## Gull Wing Surface Mount Option #300

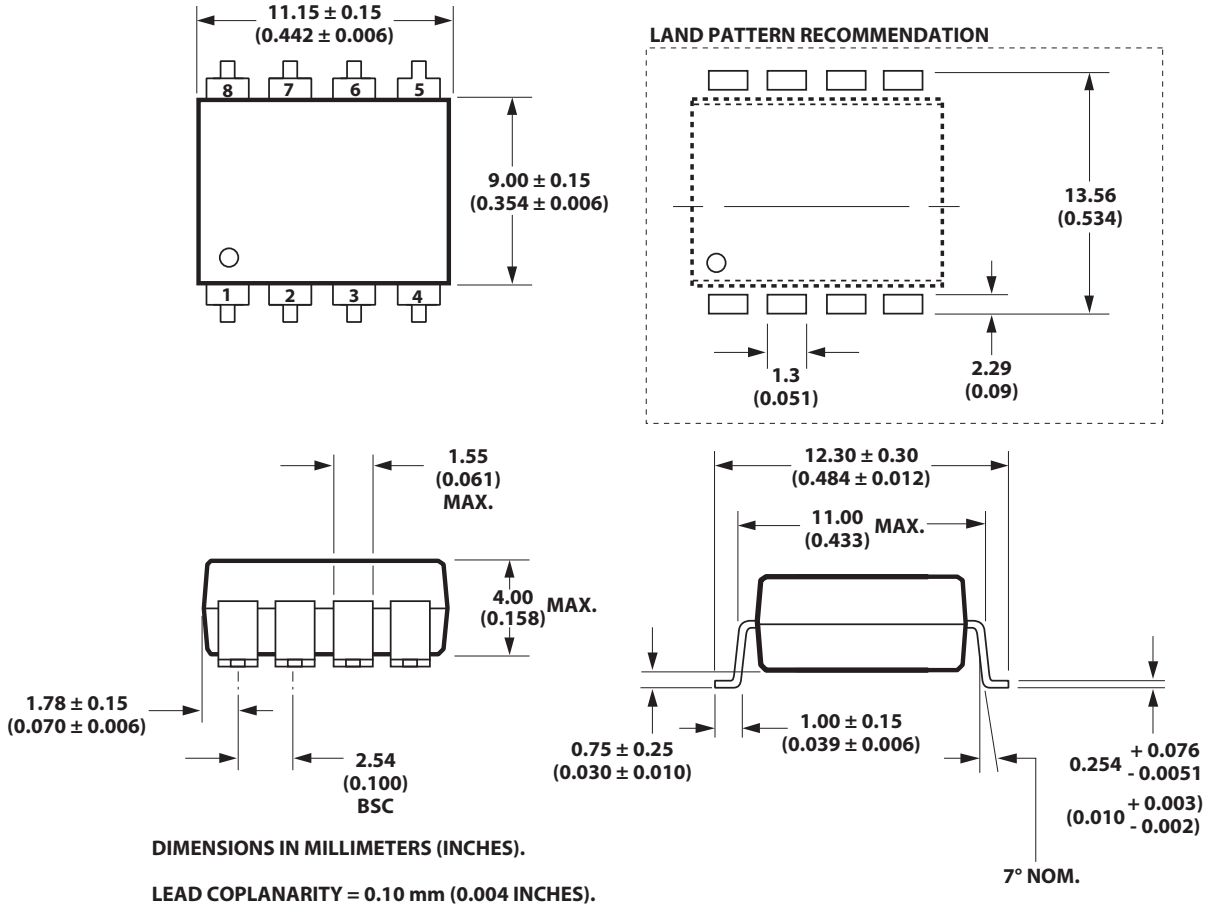


**DIMENSIONS IN MILLIMETERS (INCHES).**

**LEAD COPLANARITY = 0.10 mm (0.004 INCHES).**

**NOTE: FLOATING LEAD PROTRUSION IS 0.25 mm (10 mils) MAX.**

**Figure 1b. 8 PIN Gull Wing Surface Mount Option #300**

## Solder Reflow Temperature Profile

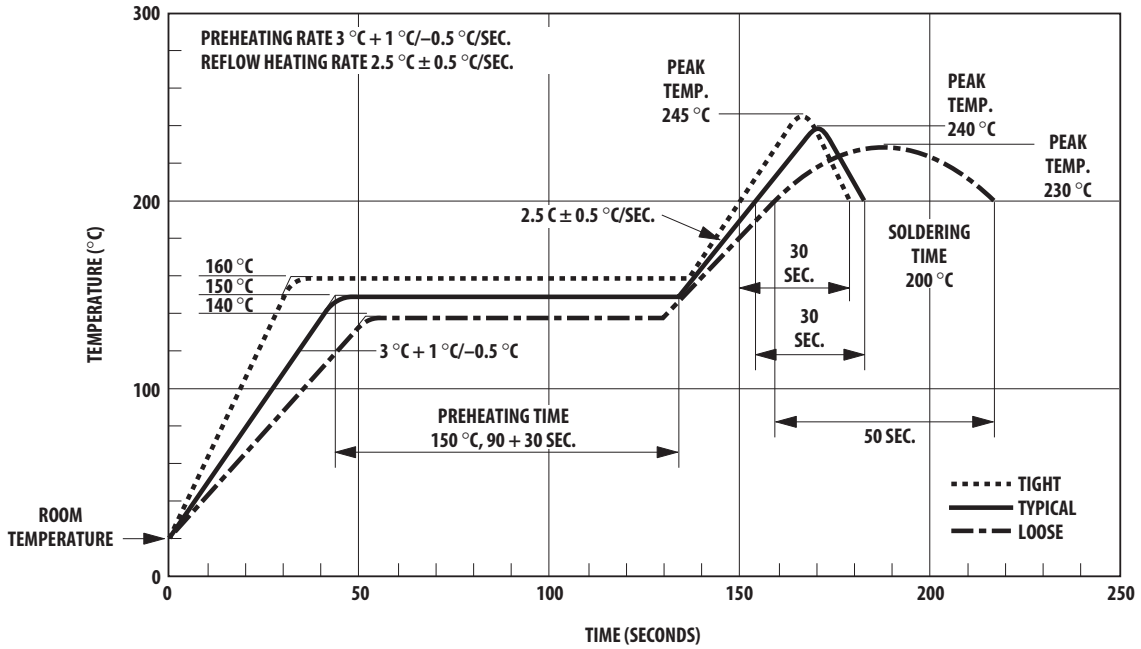


NOTE: NON-HALIDE FLUX SHOULD BE USED.

## Recommended Pb-Free IR Profile

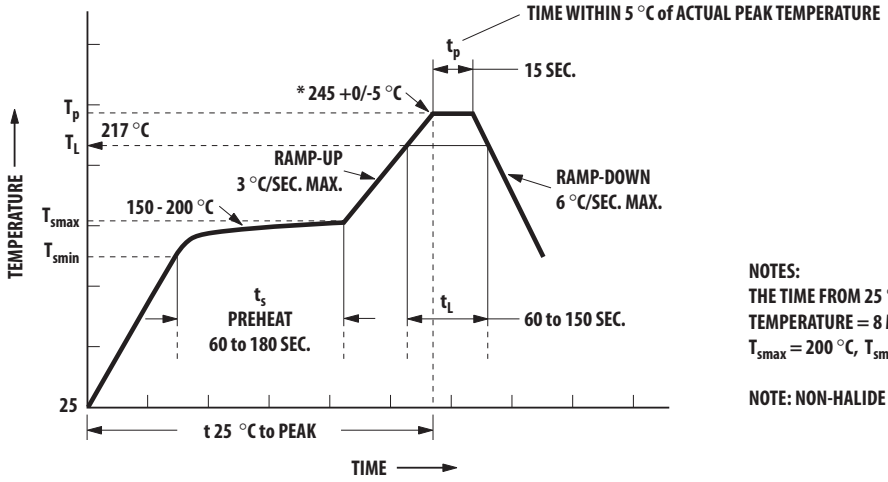


NOTES:
THE TIME FROM 25 °C to PEAK TEMPERATURE = 8 MINUTES MAX.
$T_{smax}$ = 200 °C, $T_{smin}$ = 150 °C

NOTE: NON-HALIDE FLUX SHOULD BE USED.

## Regulatory Information

The HCNR200/201 optocoupler features a 0.400" wide, eight pin DIP package. This package was specifically designed to meet worldwide regulatory requirements. The HCNR200/201 has been approved by the following organizations:

### UL

Recognized under UL 1577, Component Recognition Program, FILE E55361

### CSA

Approved under CSA Component Acceptance Notice #5, File CA 88324

### IEC/EN/DIN EN 60747-5-2

Approved under
IEC 60747-5-2:1997 + A1:2002
EN 60747-5-2:2001 + A1:2002
DIN EN 60747-5-2 (VDE 0884 Teil 2):2003-01
(Option 050 only)

**Insulation and Safety Related Specifications**

| Parameter | Symbol | Value | Units | Conditions |
|---|---|---|---|---|
| Min. External Clearance (External Air Gap) | L(IO1) | 9.6 | mm | Measured from input terminals to output terminals, shortest distance through air |
| Min. External Creepage (External Tracking Path) | L(IO2) | 10.0 | mm | Measured from input terminals to output terminals, shortest distance path along body |
| Min. Internal Clearance (Internal Plastic Gap) | | 1.0 | mm | Through insulation distance conductor to conductor, usually the direct distance between the photoemitter and photodetector inside the optocoupler cavity |
| Min. Internal Creepage (Internal Tracking Path) | | 4.0 | mm | The shortest distance around the border between two different insulating materials measured between the emitter and detector |
| Comparative Tracking Index | CTI | 200 | V | DIN IEC 112/VDE 0303 PART 1 |
| Isolation Group | | IIIa | | Material group (DIN VDE 0110) |

Option 300 – surface mount classification is Class A in accordance with CECC 00802.

**IEC/EN/DIN EN 60747-5-2 Insulation Characteristics (Option #050 Only)**

| Description | Symbol | Characteristic | Unit |
|---|---|---|---|
| Installation classification per DIN VDE 0110/1.89, Table 1<br>For rated mains voltage ≤600 V rms<br>For rated mains voltage ≤1000 V rms | | <br>I-IV<br>I-III | |
| Climatic Classification (DIN IEC 68 part 1) | | 55/100/21 | |
| Pollution Degree (DIN VDE 0110 Part 1/1.89) | | 2 | |
| Maximum Working Insulation Voltage | $V_{IORM}$ | 1414 | $V_{peak}$ |
| Input to Output Test Voltage, Method b*<br>$V_{PR}$ = 1.875 x $V_{IORM}$, 100% Production Test with $t_m$ = 1 sec, Partial Discharge < 5 pC | $V_{PR}$ | 2651 | $V_{peak}$ |
| Input to Output Test Voltage, Method a*<br>$V_{PR}$ = 1.5 x $V_{IORM}$, Type and sample test, $t_m$ = 60 sec, Partial Discharge < 5 pC | $V_{PR}$ | 2121 | $V_{peak}$ |
| Highest Allowable Overvoltage*<br>(Transient Overvoltage, $t_{ini}$ = 10 sec) | $V_{IOTM}$ | 8000 | $V_{peak}$ |
| Safety-Limiting Values<br>(Maximum values allowed in the event of a failure, also see Figure 11)<br>Case Temperature<br>Current (Input Current $I_F$, $P_S$ = 0)<br>Output Power | <br><br><br>$T_S$<br>$I_S$<br>$P_{S,OUTPUT}$ | <br><br><br>150<br>400<br>700 | <br><br><br>°C<br>mA<br>mW |
| Insulation Resistance at $T_S$, $V_{IO}$ = 500 V | $R_S$ | $>10^9$ | Ω |

*Refer to the front of the Optocoupler section of the current catalog for a more detailed description of IEC/EN/DIN EN 60747-5-2 and other product safety regulations.

**Note:** Optocouplers providing safe electrical separation per IEC/EN/DIN EN 60747-5-2 do so only within the safety-limiting values to which they are qualified. Protective cut-out switches must be used to ensure that the safety limits are not exceeded.

## Absolute Maximum Ratings

Storage Temperature ..... -55°C to +125°C
Operating Temperature ($T_A$) ..... -55°C to +100°C
Junction Temperature ($T_J$) ..... 125°C
Reflow Temperature Profile ..... See **Package Outline Drawings** Section
Lead Solder Temperature ..... 260°C for 10s
(up to seating plane)
Average Input Current - $I_F$ ..... 25 mA
Peak Input Current - $I_F$ ..... 40 mA
(50 ns maximum pulse width)
Reverse Input Voltage - $V_R$ ..... 2.5 V
($I_R$ = 100 µA, Pin 1-2)
Input Power Dissipation ..... 60 mW @ $T_A$ = 85°C
(Derate at 2.2 mW/°C for operating temperatures above 85°C)
Reverse Output Photodiode Voltage ..... 30 V
(Pin 6-5)
Reverse Input Photodiode Voltage ..... 30 V
(Pin 3-4)

## Recommended Operating Conditions

Storage Temperature ..... -40°C to +85°C
Operating Temperature ..... -40°C to +85°C
Average Input Current - $I_F$ ..... 1 - 20 mA
Peak Input Current - $I_F$ ..... 35 mA
(50% duty cycle, 1 ms pulse width)
Reverse Output Photodiode Voltage ..... 0 - 15 V
(Pin 6-5)
Reverse Input Photodiode Voltage ..... 0 - 15 V
(Pin 3-4)

**Electrical Specifications**

$T_A$ = 25°C unless otherwise specified.

| Parameter | Symbol | Device | Min. | Typ. | Max. | Units | Test Conditions | Fig. | Note |
|---|---|---|---|---|---|---|---|---|---|
| Transfer Gain | $K_3$ | HCNR200 | 0.85 | 1.00 | 1.15 | | 5 nA < $I_{PD}$ < 50 µA, 0 V < $V_{PD}$ < 15 V | 2,3 | 1 |
| | | HCNR201 | 0.95 | 1.00 | 1.05 | | 5 nA < $I_{PD}$ < 50 µA, 0 V < $V_{PD}$ < 15 V | | 1 |
| | | HCNR201 | 0.93 | 1.00 | 1.07 | | -40°C < $T_A$ < 85°C, 5 nA < $I_{PD}$ < 50 µA, 0 V < $V_{PD}$ < 15 V | | 1 |
| Temperature Coefficient of Transfer Gain | $\Delta K_3/\Delta T_A$ | | | -65 | | ppm/°C | -40°C < $T_A$ < 85°C, 5 nA < $I_{PD}$ < 50 µA, 0 V < $V_{PD}$ < 15 V | 2,3 | |
| DC NonLinearity (Best Fit) | $NL_{BF}$ | HCNR200 | | 0.01 | 0.25 | % | 5 nA < $I_{PD}$ < 50 µA, 0 V < $V_{PD}$ < 15 V | 4,5, 6 | 2 |
| | | HCNR201 | | 0.01 | 0.05 | | 5 nA < $I_{PD}$ < 50 µA, 0 V < $V_{PD}$ < 15 V | | 2 |
| | | HCNR201 | | 0.01 | 0.07 | | -40°C < $T_A$ < 85°C, 5 nA < $I_{PD}$ < 50 µA, 0 V < $V_{PD}$ < 15 V | | 2 |
| DC Nonlinearity (Ends Fit) | $NL_{EF}$ | | | 0.016 | | % | 5 nA < $I_{PD}$ < 50 µA, 0 V < $V_{PD}$ < 15 V | | 3 |
| Input Photo-diode Current Transfer Ratio ($I_{PD1}/I_F$) | $K_1$ | HCNR200 | 0.25 | 0.50 | 0.75 | % | $I_F$ = 10 mA, 0 V < $V_{PD1}$ < 15 V | 7 | |
| | | HCNR201 | 0.36 | 0.48 | 0.72 | | | | |
| Temperature Coefficient of $K_1$ | $\Delta K_1/\Delta T_A$ | | | -0.3 | | %/°C | -40°C < $T_A$ < 85°C, $I_F$ = 10 mA 0 V < $V_{PD1}$ < 15 V | 7 | |
| Photodiode Leakage Current | $I_{LK}$ | | | 0.5 | 25 | nA | $I_F$ = 0 mA, 0 V < $V_{PD}$ < 15 V | 8 | |
| Photodiode Reverse Break-down Voltage | $BV_{RPD}$ | | 30 | 150 | | V | $I_R$ = 100 µA | | |
| Photodiode Capacitance | $C_{PD}$ | | | 22 | | pF | $V_{PD}$ = 0 V | | |
| LED Forward Voltage | $V_F$ | | 1.3 | 1.6 | 1.85 | V | $I_F$ = 10 mA | 9, 10 | |
| | | | 1.2 | 1.6 | 1.95 | | $I_F$ = 10 mA, -40°C < $T_A$ < 85°C | | |
| LED Reverse Breakdown Voltage | $BV_R$ | | 2.5 | 9 | | V | $I_F$ = 100 µA | | |
| Temperature Coefficient of Forward Voltage | $\Delta V_F/\Delta T_A$ | | | -1.7 | | mV/°C | $I_F$ = 10 mA | | |
| LED Junction Capacitance | $C_{LED}$ | | | 80 | | pF | f = 1 MHz, $V_F$ = 0 V | | |

### AC Electrical Specifications

$T_A$ = 25°C unless otherwise specified.

| Parameter | Symbol | Device | Min. | Typ. | Max. | Units | Test Conditions | Fig. | Note |
|---|---|---|---|---|---|---|---|---|---|
| LED Bandwidth | f -3dB | | | 9 | | MHz | $I_F$ = 10 mA | | |
| Application Circuit Bandwidth: | | | | | | | | | |
| High Speed | | | | 1.5 | | MHz | | 16 | 6 |
| High Precision | | | | 10 | | kHz | | 17 | 6 |
| Application Circuit: IMRR | | | | | | | | | |
| High Speed | | | | 95 | | dB | freq = 60 Hz | 16 | 6, 7 |

### Package Characteristics

$T_A$ = 25°C unless otherwise specified.

| Parameter | Symbol | Device | Min. | Typ. | Max. | Units | Test Conditions | Fig. | Note |
|---|---|---|---|---|---|---|---|---|---|
| Input-Output Momentary-Withstand Voltage* | $V_{ISO}$ | | 5000 | | | V rms | RH ≤50%, t = 1 min. | | 4, 5 |
| Resistance (Input-Output) | $R_{I-O}$ | | $10^{12}$ | $10^{13}$ | | Ω | $V_O$ = 500 VDC | | 4 |
| | | | $10^{11}$ | | | | $T_A$ = 100°C, $V_{IO}$ = 500 VDC | | 4 |
| Capacitance (Input-Output) | $C_{I-O}$ | | | 0.4 | 0.6 | pF | f = 1 MHz | | 4 |

*The Input-Output Momentary Withstand Voltage is a dielectric voltage rating that should not be interpreted as an input-output continuous voltage rating. For the continuous voltage rating refer to the VDE 0884 Insulation Characteristics Table (if applicable), your equipment level safety specification, or Application Note 1074, "Optocoupler Input-Output Endurance Voltage."

**Notes:**

1. $K_3$ is calculated from the slope of the best fit line of $I_{PD2}$ vs. $I_{PD1}$ with eleven equally distributed data points from 5 nA to 50 µA. This is approximately equal to $I_{PD2}/I_{PD1}$ at $I_F$ = 10 mA.
2. BEST FIT DC NONLINEARITY ($NL_{BF}$) is the maximum deviation expressed as a percentage of the full scale output of a "best fit" straight line from a graph of $I_{PD2}$ vs. $I_{PD1}$ with eleven equally distributed data points from 5 nA to 50 µA. $I_{PD2}$ error to best fit line is the deviation below and above the best fit line, expressed as a percentage of the full scale output.
3. ENDS FIT DC NONLINEARITY ($NL_{EF}$) is the maximum deviation expressed as a percentage of full scale output of a straight line from the 5 nA to the 50 µA data point on the graph of $I_{PD2}$ vs. $I_{PD1}$.
4. Device considered a two-terminal device: Pins 1, 2, 3, and 4 shorted together and pins 5, 6, 7, and 8 shorted together.
5. In accordance with UL 1577, each optocoupler is proof tested by applying an insulation test voltage of ≥6000 V rms for ≥1 second (leakage detection current limit, $I_{I-O}$ of 5 µA max.). This test is performed before the 100% production test for partial discharge (method b) shown in the IEC/EN/DIN EN 60747-5-2 Insulation Characteris-tics Table (for Option #050 only).
6. Specific performance will depend on circuit topology and components.
7. IMRR is defined as the ratio of the signal gain (with signal applied to $V_{IN}$ of Figure 16) to the isolation mode gain (with $V_{IN}$ connected to input common and the signal applied between the input and output commons) at 60 Hz, expressed in dB.

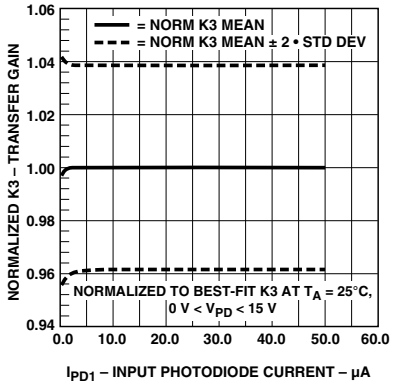


Figure 2. Normalized K3 vs. input $I_{PD}$.

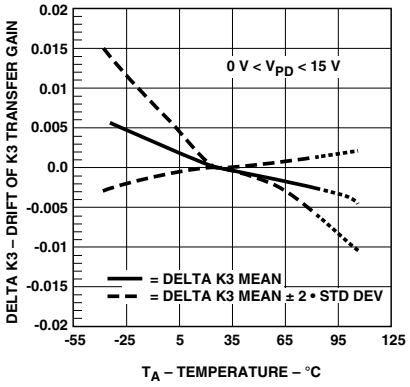


Figure 3. K3 drift vs. temperature.

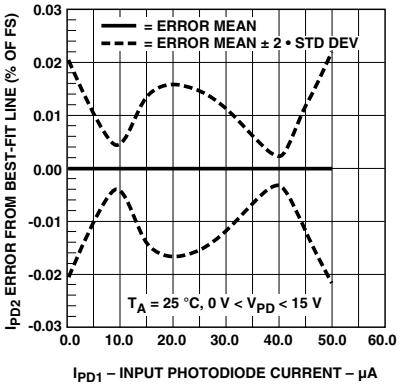


Figure 4. $I_{PD2}$ error vs. input $I_{PD}$ (see note 4).

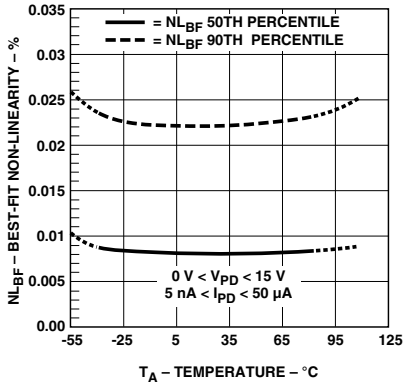


Figure 5. $NL_{BF}$ vs. temperature.

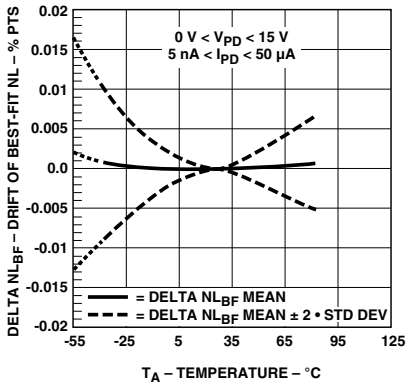


Figure 6. $NL_{BF}$ drift vs. temperature.

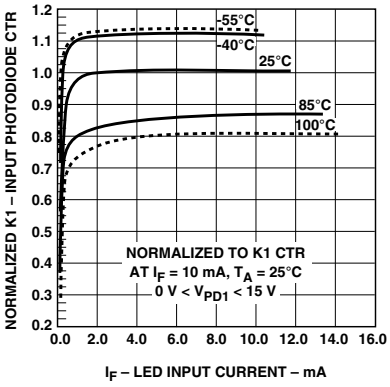


Figure 7. Input photodiode CTR vs. LED input current.

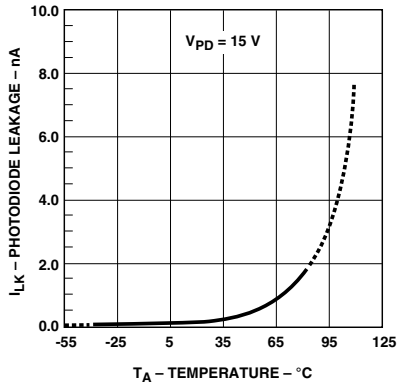


Figure 8. Typical photodiode leakage vs. temperature.

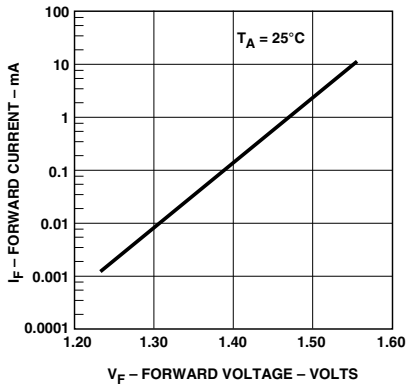


Figure 9. LED input current vs. forward voltage.

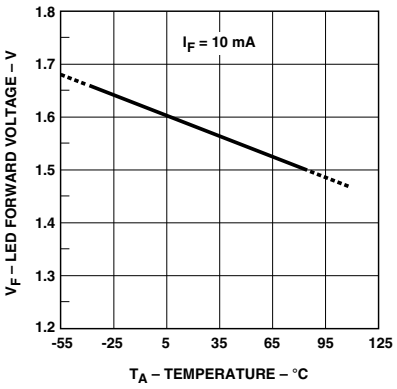


Figure 10. LED forward voltage vs. temperature.

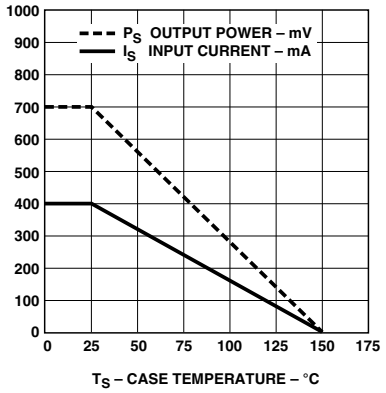


**Figure 11. Thermal derating curve dependence of safety limiting value with case temperature per IEC/EN/DIN EN 60747-5-2.**

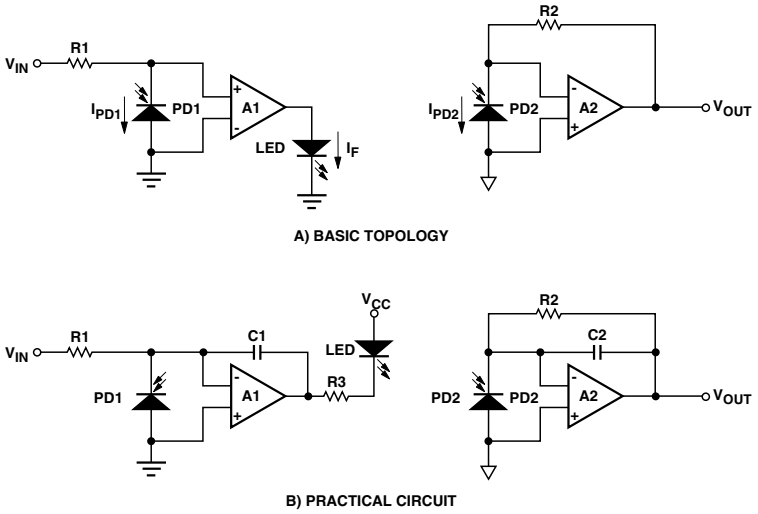


**Figure 12. Basic isolation amplifier.**

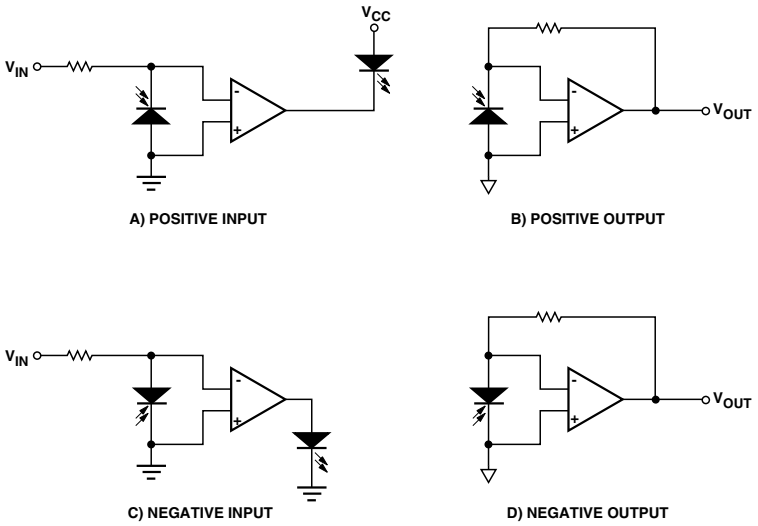


**Figure 13. Unipolar circuit topologies.**

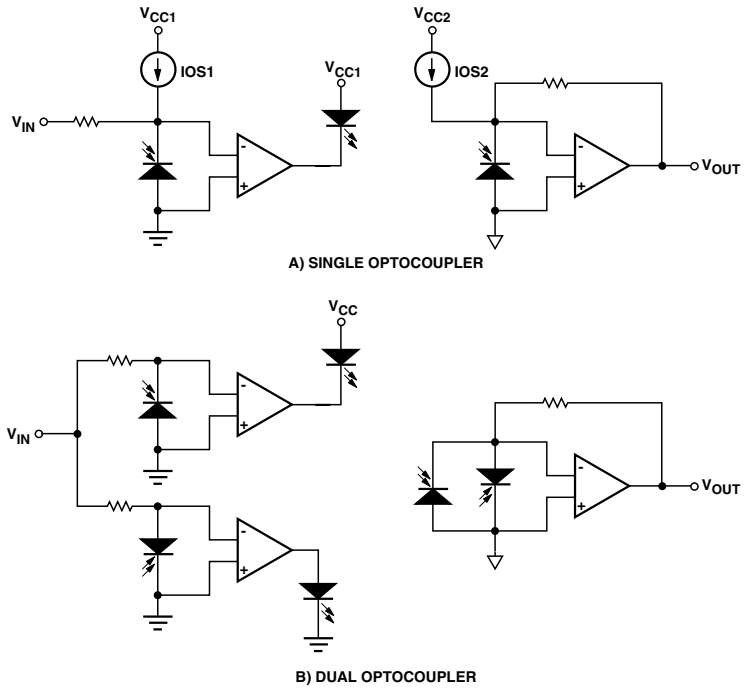


**Figure 14. Bipolar circuit topologies.**

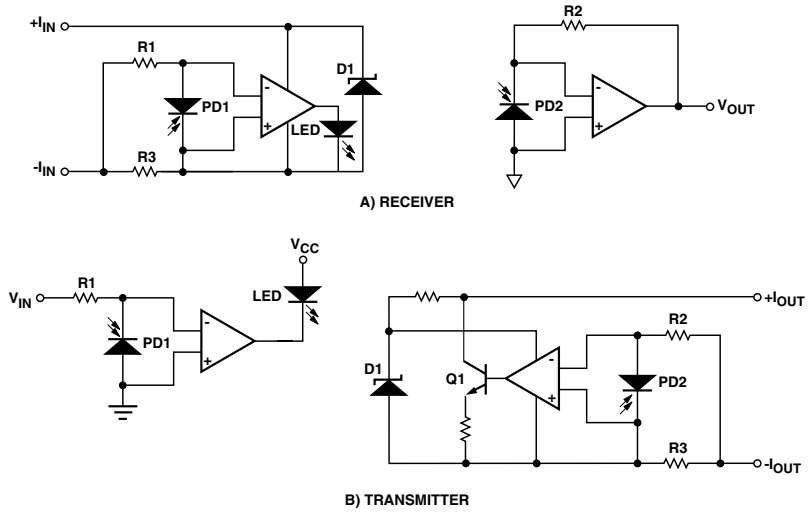


**Figure 15. Loop-powered 4-20 mA current loop circuits.**

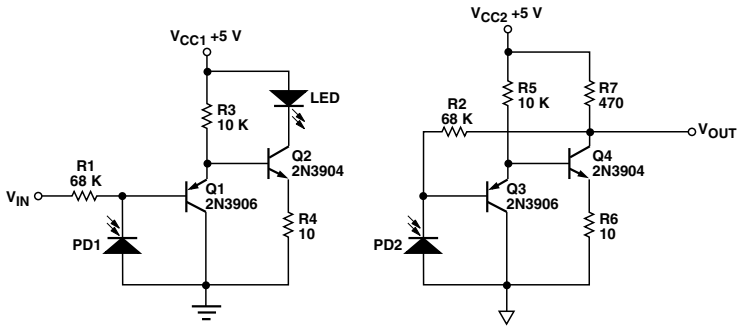


**Figure 16. High-speed low-cost analog isolator.**

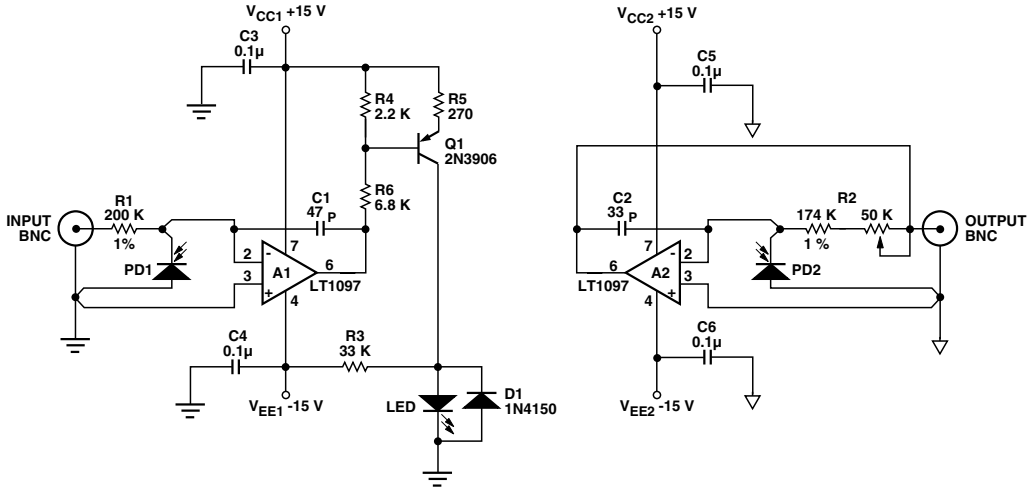


**Figure 17. Precision analog isolation amplifier.**

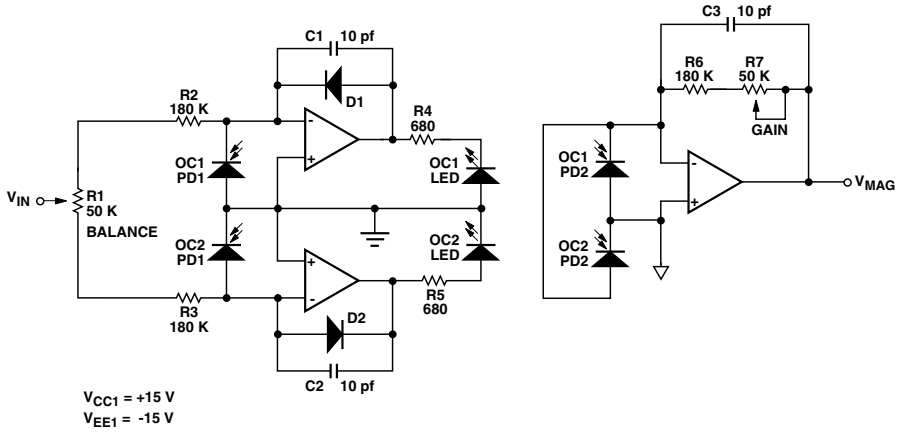


**Figure 18. Bipolar isolation amplifier.**

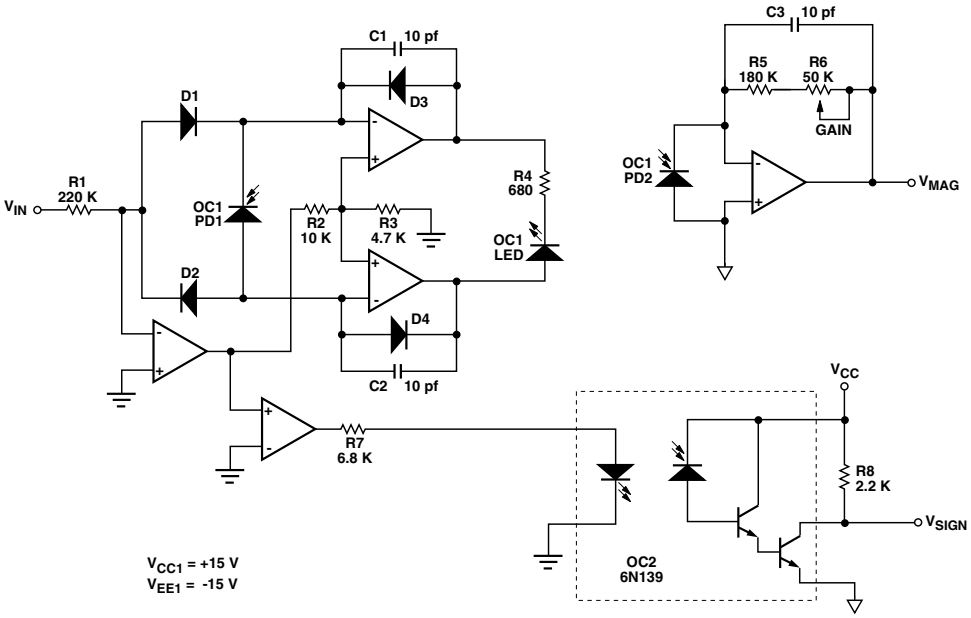


**Figure 19. Magnitude/sign isolation amplifier.**

```
*HCNR200 Linear Optocoupler SPICE Model
*                LED Cathode
*                | LED Anode
*                | | PD1 Cathode
*                | | | PD1 Anode
*                | | | | PD2 Anode
*                | | | | | PD2 Cathode
*                | | | | | | |
.SUBCKT HCNR200  1 2 3 4 5 6

* LED circuit
QLED1 8 2 7 QCPL .5
QLED2 9 2 7 QCPL .5
VLED 7 1 DC .685
VPD1 8 1 DC 2
VPD2 9 1 DC 2

* Input photodiode circuit
DPD1 4 3 DPHOTO
FPD1 3 4 VPD1 -1
CPD1 4 3 8P

* Output photodiode circuit
DPD2 5 6 DPHOTO
FPD2 6 5 VPD2 -1
CPD2 5 6 8P

* Photodiode model
.MODEL DPHOTO D(IS=4.5E-12 RS=150 N=1.3 XTI=4 EG=1.11
+  CJO=14P M=1.96 VJ=1.9)

* LED/Optical-coupling transistor model
.model QCPL NPN(IS=2.214E-19 BF=10m NF=1.010 IKF=11.00m ISE=1.167P
+  NE=1.737 RB=3.469 VAF=100 TF=1.77U CJE=80P)

.ENDS
```

**Figure 20. SPICE model listing.**

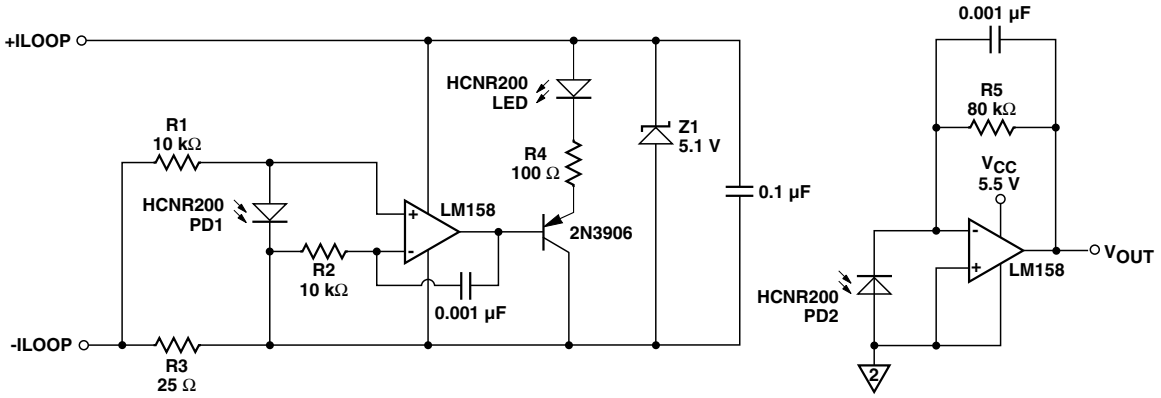


Design Equations:
VOUT / ILOOP = K3 (R5 R3) / R1 + R3)
K3 = K2 / K1 = Constant = 1

Note:
The two OP-AMPS shown are two separate LM158, and not two channels in a single dual package, otherwise the loop side and output side will not be properly isolated.

**Figure 21. 4 to 20 mA HCNR200 receiver circuit.**

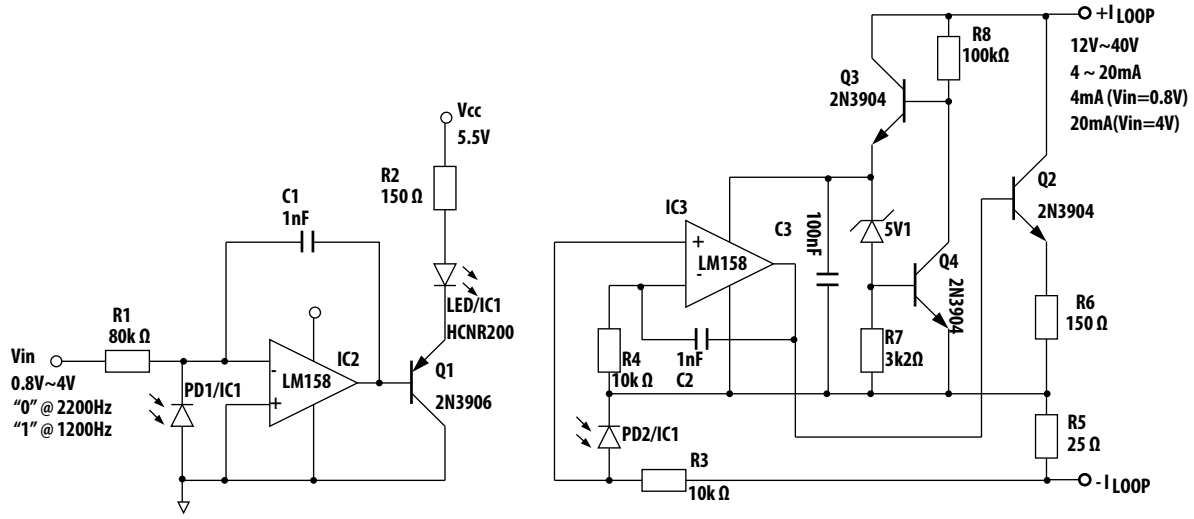


Design Equations:
(ILOOP/Vin)=K3(R5+R3)/(R5R1)
K3 = K2/K1 = Constant ≈ 1

Note:
The two OP-AMPS shown are two separate LM158 IC's, and NOT dual channels in a single package, otherwise, the LOOP side and input side will not be properly isolated;
The 5V1 Zener should be properly selected to ensure that it conducts at 187µA;

**Figure 22. 4 to 20 mA HCNR200 transmitter circuit.**

## Theory of Operation

Figure 1 illustrates how the HCNR200/201 high-linearity optocoupler is configured. The basic optocoupler consists of an LED and two photodiodes. The LED and one of the photodiodes (PD1) is on the input leadframe and the other photodiode (PD2) is on the output leadframe. The package of the optocoupler is constructed so that each photodiode receives approximately the same amount of light from the LED.

An external feedback amplifier can be used with PD1 to monitor the light output of the LED and automatically adjust the LED current to compensate for any non-linearities or changes in light output of the LED. The feedback amplifier acts to stabilize and linearize the light output of the LED. The output photodiode then converts the stable, linear light output of the LED into a current, which can then be converted back into a voltage by another amplifier.

Figure 12a illustrates the basic circuit topology for implementing a simple isolation amplifier using the HCNR200/201 optocoupler. Besides the optocoupler, two external op-amps and two resistors are required. This simple circuit is actually a bit too simple to function properly in an actual circuit, but it is quite useful for explaining how the basic isolation amplifier circuit works (a few more components and a circuit change are required to make a practical circuit, like the one shown in Figure 12b).

The operation of the basic circuit may not be immediately obvious just from inspecting Figure 12a, particularly the input part of the circuit. Stated briefly, amplifier A1 adjusts the LED current ($I_F$), and therefore the current in PD1 ($I_{PD1}$), to maintain its "+" input terminal at 0 V. For example, increasing the input voltage would tend to increase the voltage of the "+" input terminal of A1 above 0 V. A1 amplifies that increase, causing $I_F$ to increase, as well as $I_{PD1}$. Because of the way that PD1 is connected, $I_{PD1}$ will pull the "+" terminal of the op-amp back toward ground. A1 will continue to increase $I_F$ until its "+" terminal is back at 0 V. Assuming that A1 is a perfect op-amp, no current flows into the inputs of A1; therefore, all of the current flowing through R1 will flow through PD1. Since the "+" input of A1 is at 0 V, the current through R1, and therefore $I_{PD1}$ as well, is equal to $V_{IN}/R1$.

Essentially, amplifier A1 adjusts $I_F$ so that

$$I_{PD1} = V_{IN}/R1.$$

Notice that $I_{PD1}$ depends ONLY on the input voltage and the value of R1 and is independent of the light output characteristics of the LED. As the light output of the LED changes with temperature, amplifier A1 adjusts $I_F$ to compensate and maintain a constant current in PD1. Also notice that $I_{PD1}$ is exactly proportional to $V_{IN}$, giving a very linear relationship between the input voltage and the photodiode current.

The relationship between the input optical power and the output current of a photodiode is very linear. Therefore, by stabilizing and linearizing $I_{PD1}$, the light output of the LED is also stabilized and linearized. And since light from the LED falls on both of the photodiodes, $I_{PD2}$ will be stabilized as well.

The physical construction of the package determines the relative amounts of light that fall on the two photodiodes and, therefore, the ratio of the photodiode currents. This results in very stable operation over time and temperature. The photodiode current ratio can be expressed as a constant, K, where

$$K = I_{PD2}/I_{PD1}.$$

Amplifier A2 and resistor R2 form a trans-resistance amplifier that converts $I_{PD2}$ back into a voltage, $V_{OUT}$, where

$$V_{OUT} = I_{PD2}*R2.$$

Combining the above three equations yields an overall expression relating the output voltage to the input voltage,

$$V_{OUT}/V_{IN} = K*(R2/R1).$$

Therefore the relationship between $V_{IN}$ and $V_{OUT}$ is constant, linear, and independent of the light output characteristics of the LED. The gain of the basic isolation amplifier circuit can be adjusted simply by adjusting the ratio of R2 to R1. The parameter K (called $K_3$ in the electrical specifications) can be thought of as the gain of the optocoupler and is specified in the data sheet.

Remember, the circuit in Figure 12a is simplified in order to explain the basic circuit operation. A practical circuit, more like Figure 12b, will require a few additional components to stabilize the input part of the circuit, to limit the LED current, or to optimize circuit performance. Example application circuits will be discussed later in the data sheet.

## Circuit Design Flexibility

Circuit design with the HCNR200/201 is very flexible because the LED and both photodiodes are accessible to the designer. This allows the designer to make performance trade-offs that would otherwise be difficult to make with commercially available isolation amplifiers (e.g., bandwidth vs. accuracy vs. cost). Analog isolation circuits can be designed for applications that have either unipolar (e.g., 0-10 V) or bipolar (e.g., ±10 V) signals, with positive or negative input or output voltages. Several simplified circuit topologies illustrating the design flexibility of the HCNR200/201 are discussed below.

The circuit in Figure 12a is configured to be non-inverting with positive input and output voltages. By simply changing the polarity of one or both of the photodiodes, the LED, or the op-amp inputs, it is possible to implement other circuit configurations as well. Figure 13 illustrates how to change the basic circuit to accommodate both positive and negative input and output voltages. The input and output circuits can be matched to achieve any combination of positive and negative voltages, allowing for both inverting and non-inverting circuits.

All of the configurations described above are unipolar (single polarity); the circuits cannot accommodate a signal that might swing both positive and negative. It is possible, however, to use the HCNR200/201 optocoupler to implement a bipolar isolation amplifier. Two topologies that allow for bipolar operation are shown in Figure 14.

The circuit in Figure 14a uses two current sources to offset the signal so that it appears to be unipolar to the optocoupler. Current source $I_{OS1}$ provides enough offset to ensure that $I_{PD1}$ is always positive. The second current source, $I_{OS2}$, provides an offset of opposite polarity to obtain a net circuit offset of zero. Current sources $I_{OS1}$ and $I_{OS2}$ can be implemented simply as resistors connected to suitable voltage sources.

The circuit in Figure 14b uses two optocouplers to obtain bipolar operation. The first optocoupler handles the positive voltage excursions, while the second optocoupler handles the negative ones. The output photodiodes are connected in an antiparallel configuration so that they produce output signals of opposite polarity.

The first circuit has the obvious advantage of requiring only one optocoupler; however, the offset performance of the circuit is dependent on the matching of $I_{OS1}$ and $I_{OS2}$ and is also dependent on the gain of the optocoupler. Changes in the gain of the optocoupler will directly affect the offset of the circuit.

The offset performance of the second circuit, on the other hand, is much more stable; it is independent of optocoupler gain and has no matched current sources to worry about. However, the second circuit requires two optocouplers, separate gain adjustments for the positive and negative portions of the signal, and can exhibit crossover distortion near zero volts. The correct circuit to choose for an application would depend on the requirements of that particular application. As with the basic isolation amplifier circuit in Figure 12a, the circuits in Figure 14 are simplified and would require a few additional components to function properly. Two example circuits that operate with bipolar input signals are discussed in the next section.

As a final example of circuit design flexibility, the simplified schematics in Figure 15 illustrate how to implement 4-20 mA analog current-loop transmitter and receiver circuits using the HCNR200/201 optocoupler. An important feature of these circuits is that the loop side of the circuit is powered entirely by the loop current, eliminating the need for an isolated power supply.

The input and output circuits in Figure 15a are the same as the negative input and positive output circuits shown in Figures 13c and 13b, except for the addition of R3 and zener diode D1 on the input side of the circuit. D1 regulates the supply voltage for the input amplifier, while R3 forms a current divider with R1 to scale the loop current down from 20 mA to an appropriate level for the input circuit (<50 µA).

As in the simpler circuits, the input amplifier adjusts the LED current so that both of its input terminals are at the same voltage. The loop current is then divided

between R1 and R3. $I_{PD1}$ is equal to the current in R1 and is given by the following equation:

$$I_{PD1} = I_{LOOP}*R3/(R1+R3).$$

Combining the above equation with the equations used for Figure 12a yields an overall expression relating the output voltage to the loop current,

$$V_{OUT}/I_{LOOP} = K*(R2*R3)/(R1+R3).$$

Again, you can see that the relationship is constant, linear, and independent of the characteristics of the LED.

The 4-20 mA transmitter circuit in Figure 15b is a little different from the previous circuits, particularly the output circuit. The output circuit does not directly generate an output voltage which is sensed by R2, it instead uses Q1 to generate an output current which flows through R3. This output current generates a voltage across R3, which is then sensed by R2. An analysis similar to the one above yields the following expression relating output current to input voltage:

$$I_{LOOP}/V_{IN} = K*(R2+R3)/(R1*R3).$$

The preceding circuits were presented to illustrate the flexibility in designing analog isolation circuits using the HCNR200/201. The next section presents several complete schematics to illustrate practical applications of the HCNR200/201.

### Example Application Circuits

The circuit shown in Figure 16 is a high-speed low-cost circuit designed for use in the feedback path of switch-mode power supplies. This application requires good bandwidth, low cost and stable gain, but does not require very high accuracy. This circuit is a good example of how a designer can trade off accuracy to achieve improvements in bandwidth and cost. The circuit has a bandwidth of about 1.5 MHz with stable gain characteristics and requires few external components.

Although it may not appear so at first glance, the circuit in Figure 16 is essentially the same as the circuit in Figure 12a. Amplifier A1 is comprised of Q1, Q2, R3 and R4, while amplifier A2 is comprised of Q3, Q4, R5, R6 and R7. The circuit operates in the same manner as well; the only difference is the performance of amplifiers A1 and A2. The lower gains, higher input currents and higher offset voltages affect the accuracy of the circuit, but not the way it operates. Because the basic circuit operation has not changed, the circuit still has good gain stability. The use of discrete transistors instead of op-amps allowed the design to trade off accuracy to achieve good bandwidth and gain stability at low cost.

To get into a little more detail about the circuit, R1 is selected to achieve an LED current of about 7-10 mA at the nominal input operating voltage according to the following equation:

$$I_F = (V_{IN}/R1)/K1,$$

where $K_1$ (i.e., $I_{PD1}/I_F$) of the optocoupler is typically about 0.5%. R2 is then selected to achieve the desired output voltage according to the equation,

$$V_{OUT}/V_{IN} = R2/R1.$$

The purpose of R4 and R6 is to improve the dynamic response (i.e., stability) of the input and output circuits by lowering the local loop gains. R3 and R5 are selected to provide enough current to drive the bases of Q2 and Q4. And R7 is selected so that Q4 operates at about the same collector current as Q2.

The next circuit, shown in Figure 17, is designed to achieve the highest possible accuracy at a reasonable cost. The high accuracy and wide dynamic range of the circuit is achieved by using low-cost precision op-amps with very low input bias currents and offset voltages and is limited by the performance of the optocoupler. The circuit is designed to operate with input and output voltages from 1 mV to 10 V.

The circuit operates in the same way as the others. The only major differences are the two compensation capacitors and additional LED drive circuitry. In the high-speed circuit discussed above, the input and output circuits are stabilized by reducing the local loop gains of the input and output circuits. Because reducing the loop gains would decrease the accuracy of the circuit, two compensation capacitors, C1 and C2, are instead used to improve circuit stability. These capacitors also limit the bandwidth of the circuit to about 10 kHz and can be used to reduce the output noise of the circuit by reducing its bandwidth even further.

The additional LED drive circuitry (Q1 and R3 through R6) helps to maintain the accuracy and bandwidth of the circuit over the entire range of input voltages. Without these components, the transconductance of the LED driver would decrease at low input voltages and LED currents. This would reduce the loop gain of the input circuit, reducing circuit accuracy and bandwidth. D1 prevents excessive reverse voltage from being applied to the LED when the LED turns off completely.

No offset adjustment of the circuit is necessary; the gain can be adjusted to unity by simply adjusting the 50 kohm potentiometer that is part of R2. Any OP-97 type of op-amp can be used in the circuit, such as the LT1097 from Linear Technology or the AD705 from Analog Devices, both of which offer pA bias currents, µV offset voltages and are low cost. The input terminals of the op-amps and the photodiodes are connected in the circuit using Kelvin connections to help ensure the accuracy of the circuit.

The next two circuits illustrate how the HCNR200/201 can be used with bipolar input signals. The isolation amplifier in Figure 18 is a practical implementation of the circuit shown in Figure 14b. It uses two optocouplers, OC1 and OC2; OC1 handles the positive portions of the input signal and OC2 handles the negative portions.

Diodes D1 and D2 help reduce crossover distortion by keeping both amplifiers active during both positive and negative portions of the input signal. For example, when the input signal positive, optocoupler OC1 is active while OC2 is turned off. However, the amplifier controlling OC2 is kept active by D2, allowing it to turn on OC2 more rapidly when the input signal goes negative, thereby reducing crossover distortion.

Balance control R1 adjusts the relative gain for the positive and negative portions of the input signal, gain control R7 adjusts the overall gain of the isolation amplifier, and capacitors C1-C3 provide compensation to stabilize the amplifiers.

The final circuit shown in Figure 19 isolates a bipolar analog signal using only one optocoupler and generates two output signals: an analog signal proportional to the magnitude of the input signal and a digital signal corresponding to the sign of the input signal. This circuit is especially useful for applications where the output of the circuit is going to be applied to an analog-to-digital converter. The primary advantages of this circuit are very good linearity and offset, with only a single gain adjustment and no offset or balance adjustments.

To achieve very high linearity for bipolar signals, the gain should be exactly the same for both positive and negative input polarities. This circuit achieves excellent linearity by using a single optocoupler and a single input resistor, which guarantees identical gain for both positive and negative polarities of the input signal. This precise matching of gain for both polarities is much more difficult to obtain when separate components are used for the different input polarities, such as is the previous circuit.

The circuit in Figure 19 is actually very similar to the previous circuit. As mentioned above, only one optocoupler is used. Because a photodiode can conduct current in only one direction, two diodes (D1 and D2) are used to steer the input current to the appropriate terminal of input photodiode PD1 to allow bipolar input currents. Normally the forward voltage drops of the diodes would cause a serious linearity or accuracy problem. However, an additional amplifier is used to provide an appropriate offset voltage to the other amplifiers that exactly cancels the diode voltage drops to maintain circuit accuracy.

Diodes D3 and D4 perform two different functions; the diodes keep their respective amplifiers active independent of the input signal polarity (as in the previous circuit), and they also provide the feedback signal to PD1 that cancels the voltage drops of diodes D1 and D2.

Either a comparator or an extra op-amp can be used to sense the polarity of the input signal and drive an inexpensive digital optocoupler, like a 6N139.

It is also possible to convert this circuit into a fully bipolar circuit (with a bipolar output signal) by using the output of the 6N139 to drive some CMOS switches to switch the polarity of PD2 depending on the polarity of the input signal, obtaining a bipolar output voltage swing.

## HCNR200/201 SPICE Model

Figure 20 is the net list of a SPICE macro-model for the HCNR200/201 high-linearity optocoupler. The macro-model accurately reflects the primary characteristics of the HCNR200/201 and should facilitate the design and understanding of circuits using the HCNR200/201 optocoupler.

For product information and a complete list of distributors, please go to our website: **www.avagotech.com**

Avago, Avago Technologies, and the A logo are trademarks of Avago Technologies in the United States and other countries.
Data subject to change. Copyright © 2005-2011 Avago Technologies. All rights reserved. Obsoletes AV01-0567EN
AV02-0886EN - December 10, 2011

Компания «ЭлектроПласт» предлагает заключение долгосрочных отношений при поставках импортных электронных компонентов на взаимовыгодных условиях!

Наши преимущества:

- Оперативные поставки широкого спектра электронных компонентов отечественного и импортного производства напрямую от производителей и с крупнейших мировых складов;
- Поставка более 17-ти миллионов наименований электронных компонентов;
- Поставка сложных, дефицитных, либо снятых с производства позиций;
- Оперативные сроки поставки под заказ (от 5 рабочих дней);
- Экспресс доставка в любую точку России;
- Техническая поддержка проекта, помощь в подборе аналогов, поставка прототипов;
- Система менеджмента качества сертифицирована по Международному стандарту ISO 9001;
- Лицензия ФСБ на осуществление работ с использованием сведений, составляющих государственную тайну;
- Поставка специализированных компонентов (Xilinx, Altera, Analog Devices, Intersil, Interpoint, Microsemi, Aeroflex, Peregrine, Syfer, Eurofarad, Texas Instrument, Miteq, Cobham, E2V, MA-COM, Hittite, Mini-Circuits,General Dynamics и др.);

Помимо этого, одним из направлений компании «ЭлектроПласт» является направление «Источники питания». Мы предлагаем Вам помощь Конструкторского отдела:

- Подбор оптимального решения, техническое обоснование при выборе компонента;
- Подбор аналогов;
- Консультации по применению компонента;
- Поставка образцов и прототипов;
- Техническая поддержка проекта;
- Защита от снятия компонента с производства.

**Как с нами связаться**

**Телефон:** 8 (812) 309 58 32 (многоканальный)
**Факс:** 8 (812) 320-02-42
**Электронная почта:** org@eplast1.ru
**Адрес:** 198099, г. Санкт-Петербург, ул. Калинина, дом 2, корпус 4, литера А.