First Edition
Sep 1, 2005

LCD Module Technical Specification

Final Revision
******

Type No. **C-51505NFJ-SLW-AIN**

Approved by (Quality Assurance Division)

Checked by (ACI Engineering Division)

T.Yuchi
Prepared by (ACI Engineering Division)

Table of Contents

1. General Specifications 2
2. Electrical Specifications 3
3. Optical Specifications 7
4. I/O Terminal 9
5. Test 11
6. Appearance Standards 12
7. Code System of Production Lot 16
8. Type Number 16
9. Applying Precautions 16
10. Precautions Relating Product Handling 17
11. Warranty 18

Revision History

Rev.	Date	Page	Comment

1.General Specifications

Operating Temp.	:	min. -20°C ~ max. 70°C
Storage Temp.	:	min. -20°C ~ max. 70°C
Display Format	:	20 characters × 2 lines
Display Fonts	:	5 × 8 dots (1 character)
Viewing Area	:	83.0 (W) × 18.6 (H) mm
Outline Dimensions	:	116.0 (W) × 37.0 (H) × (15.6) (D) mm
Weight	:	42.9g max.
LCD Type	:	NSD-21334 (F-STN / Black&White-mode / Transflective)
Viewing Angle	:	6:00
Data Transfer	:	8-bit parallel data transfer
Backlight	:	LED Backlight / White
Drawings	:	Dimensional Outline C-51505 AH base
RoHS regulation	:	To our best knowledge, this product satisfies material requirement of RoHS regulation. Our company is doing the best efforts to obtain the equivalent certificate from our suppliers.

2.Electrical Specifications

2.1.Absolute Maximum Ratings

V_{SS}=0V

Parameter	Symbol	Conditions	Min.	Max.	Units
Supply Voltage (Logic)	V_{CC}-V_{SS}	-	-0.3	7.0	V
Supply Voltage (LCD Drive)	V_{CC}-V_{EE}	-	-0.3	13.5	V
Input Voltage	V_I	-	-0.3	V_{CC}+0.3	V

2.2.DC Characteristics

Ta=25°C, V_{CC}=5V, V_{SS}=V_{EE}=0V

Parameter	Symbol	Conditions	Min.	Typ.	Max.	Units
Supply Voltage (Logic)	V_{CC}-V_{SS}	-	4.5	-	5.5	V
Supply Voltage (LCD Drive)	V_{CC}-V_{EE}	Shown in 3.1				V
High Level Input Voltage	V_{IH}	-	2.2	-	V_{CC}	V
Low Level Input Voltage	V_{IL}	-	-0.3	-	0.8	V
High Level Output Voltage	V_{OH}	I_{OH}=-0.25mA	2.4	-	-	V
Low Level Output Voltage	V_{OL}	I_{OL}=1.2mA	-	-	0.4	V
Supply Current	I_{CC}	V_{CC}-V_{SS}=5.3V	-	2.0	3.0	mA

All voltage values are referenced to V_{SS} =0V

V_1 to V_5 must maintain $V_{DD} \geq V_1 \geq V_2 \geq V_3 \geq V_4 \geq V_5$.

2.3. AC Characteristic

Read Operation

V_{CC}=5.0V±10%

Parameter	Symbol	Min.	Max.	Units
Enable Cycle Time	t_{CYCE}	500	-	ns
Enable "H" Level Pulse Width	t_{WHE}	300	-	ns
Enable Rise/Fall Time	t_{RE}, t_{FE}	-	25	ns
RS,R/W Setup Time (8-bit operation mode) (4-bit operation mode)	t_{AS}	60 100	-	ns
RS,R/W Address Hold Time	t_{AH}	10	-	ns
Read Data Output Delay	t_{RD}	-	190	ns
Read Data Hold Time	t_{DHR}	20	-	ns

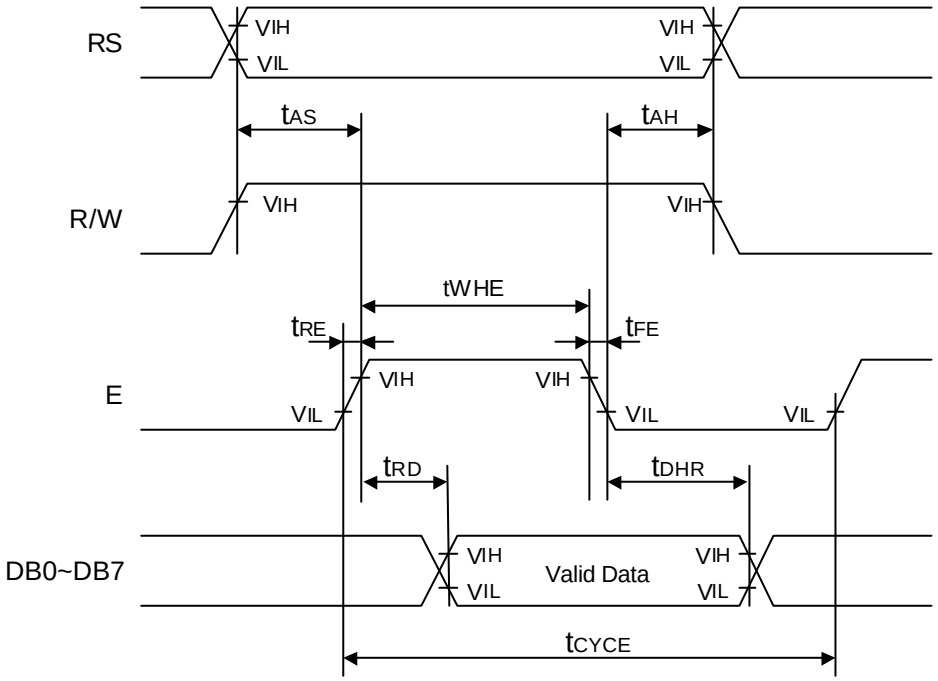

Read Operation Timing

Write Operation

V_{CC}=5.0V±10%

Parameter	Symbol	Min.	Max.	Units
Enable Cycle Time	t_{CYCE}	500	-	ns
Enable "H" Level Pulse Width	t_{WHE}	300	-	ns
Enable Rise/Fall Time	t_{RE}, t_{FE}	-	25	ns
RS,R/W Setup Time (8-bit operation mode) (4-bit operation mode)	t_{AS}	60 100	-	ns
RS,R/W Address Hold Time	t_{AH}	10	-	ns
Data Output Delay	t_{DS}	-	-	ns
Data Hold Time	t_{DHR}	10	-	ns

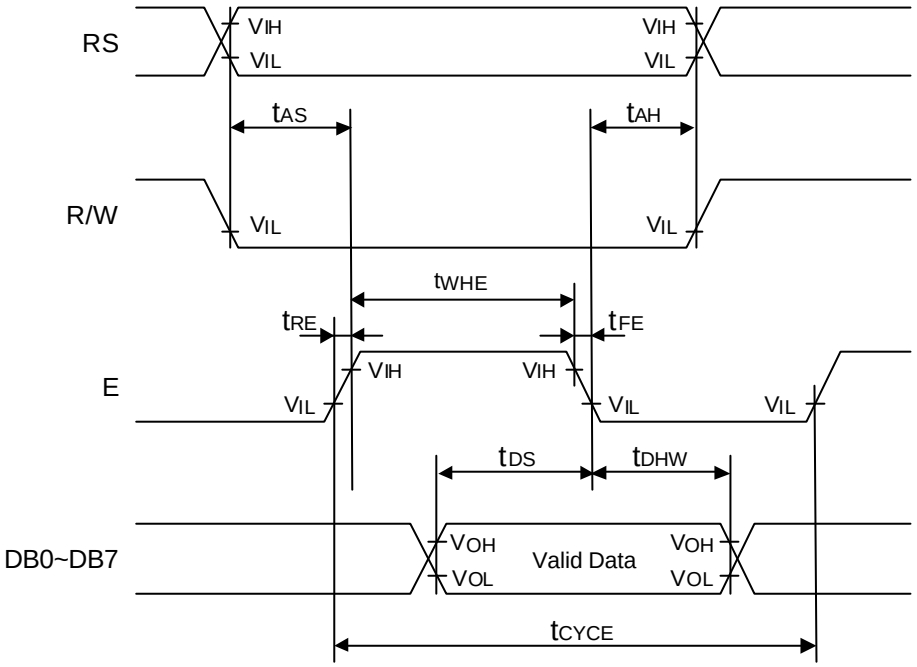

Write Operation Timing

2.4. Lighting Specifications (LED Unit)

2.4.1. Absolute Maximum Ratings

Ta=25°C

Parameter	Symbol	Conditions	Min.	Typ.	Max.	Units
Forward Voltage	V_F	Note 1	-	-	6.0	V
LED Power Dissipation	P_D	-	-	-	0.125	mW
Reverse Voltage	V_R	-	-	-	5.0	V

Note 1 : V_F is defined as the voltage between ANODE and CATHODE as shown below.

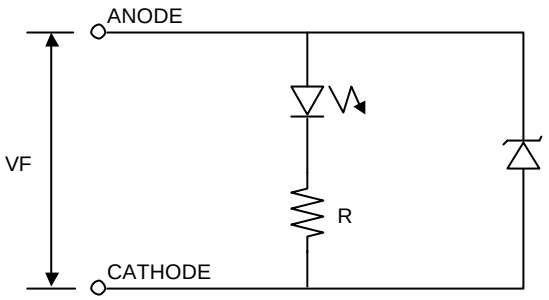

2.4.2. Operating Characteristics

Ta=25°C

Parameter	Symbol	Conditions	Min.	Typ.	Max.	Units
Foward Current	I_F	V_F=5.0V	-	15	18	mA
Luminance of Backlight Surface	L	V_F=5.0V	125	-	-	cd/m^2

3.Optical Specifications

3.1.LCD Driving Voltage

Parameter	Symbol	Conditions	Min.	Typ.	Max.	Units
Recommended	V_{CC}-V_{EE}	Ta=-20°C	-	-	5.7	V
LCD Driving Voltage		Ta=25°C	4.9	5.3	5.7	V
Note 1		Ta=70°C	4.7	-	-	V

Note 1 : Voltage (Applied actual waveform to LCD Module) for the best contrast. The range of minimum and maximum shows tolerance of the operating voltage. The specified contrast ratio and response time are not guaranteed over the entire range.

3.2.Optical Characteristics

Ta=25°C, 1/16 Duty, 1/5 Bias, V_{OD}=5.3V (Note 4), θ= 0°, ϕ=-°

Parameter		Symbol	Conditions	Min.	Typ.	Max.	Units
Contrast Ratio Note 1		CR	θ= 0°,ϕ=-°	-	5	-	
Viewing Angle			Shown in 3.3				
Response	Rise Note 2	T_{ON}	-	-	80	160	ms
Time	Decay Note 3	T_{OFF}	-	-	110	200	ms

Note 1 :Contrast ratio is definded as follows.(CR = L_{OFF} / L_{ON})

L_{ON} : Luminance of the ON segments

L_{OFF} : Luminance of the OFF segments

Measuring Spot:0.9mmϕ

Note 2 :The time that the luminance level reaches 90% of the saturation level from 0% when ON signal is applied.

Note 3 :The time that the luminance level reaches 10% of the saturation level from 100% when OFF signal is applied.

Note 4 :Definition of Driving Voltage V_{OD}

V_{OD}=V_{CC}-V_{ADJ}-V_{BE}

Assuming that the typical driving waveforms shown below are applied to the LCD Panel at 1/A Duty - 1/B Bias (A: Duty Number, B: Bias Number). Driving voltage V_{OD} is definded as follows.

V_{OD} = (Vth1+Vth2) / 2

Vth1: The voltage V_{O-P} that should provide 70% of the saturation level in the luminance at the segment which the ON signal is applied to.

Vth2: The voltage V_{O-P} that should provide 20% of the saturation level in the luminance at the segment which the OFF signal is applied to.

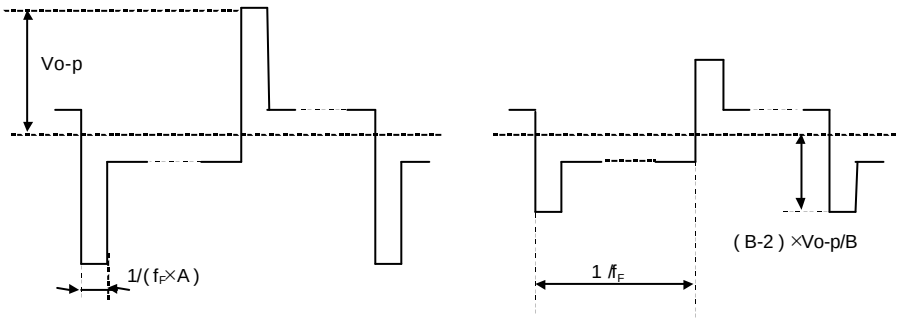

(ON SIGNAL) (OFF SIGNAL)

3.3. Definition of Viewing Angle and Optimum Viewing Area

*Point • shows the point where contrast ratio is measured. : θ= 0°, ϕ= -°

*Driving condition : 1/16 Duty, 1/5 Bias, V_{OD}=5.3V, f_F=84.3Hz

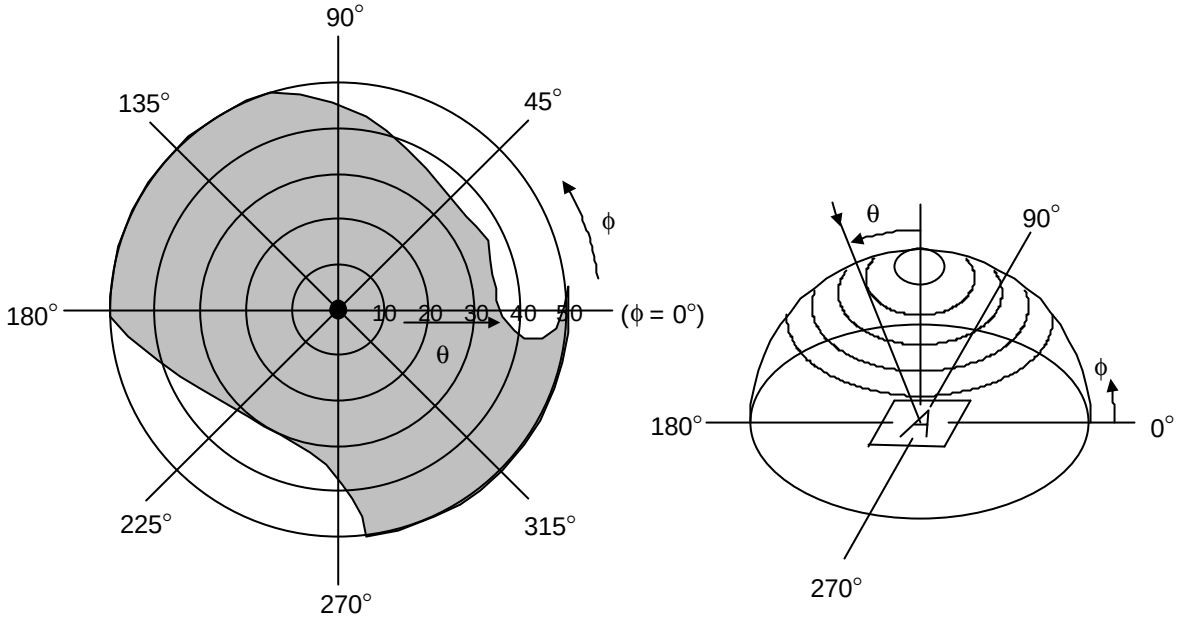

*Area shows typ. CR≥2 (Measuring Spot:0.9mmϕ)

3.4. System Block Diagram

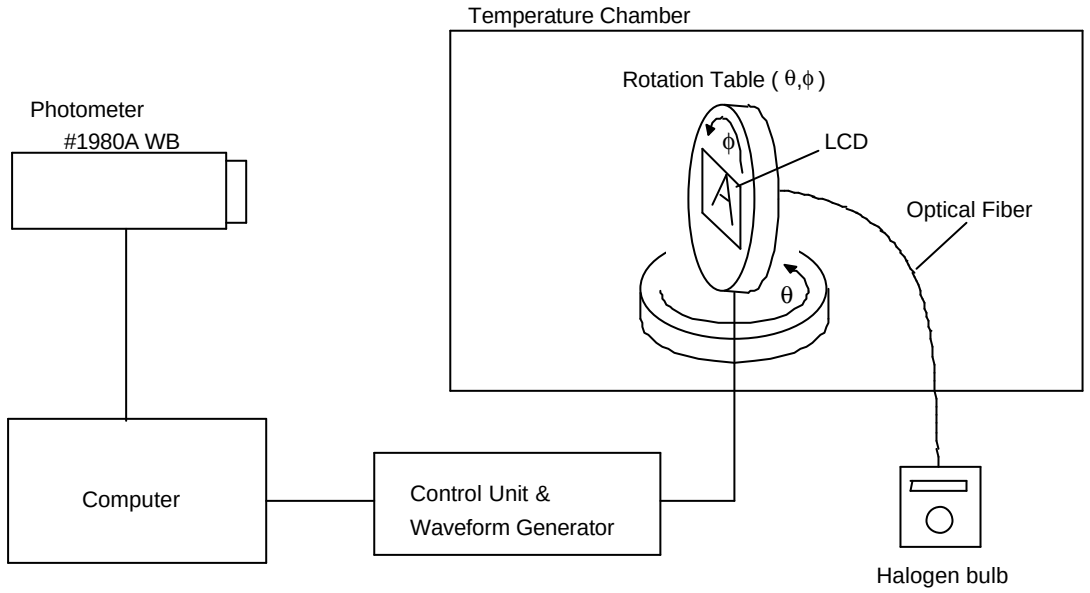

4.I/O Terminal

4.1. Pin Assignment

CN1

No.	Symbol	Function
1	LED (A)	LED Anode Terminal
2	LED (K)	LED Cathode Terminal
3	V_{SS}	Power Supply (0V, GND)
4	V_{CC}	Power Supply for Logic
5	V_{EE}	Power Supply for LCD Drive
6	RS	Register Select Signal
7	R/W	Read/Write Select Signal H : Read L : Write
8	E	Enable Signal (No pull-up Resister)
9	DB0	Data Bus Line / Non-connection at 4-bit operation
10	DB1	Data Bus Line / Non-connection at 4-bit operation
11	DB2	Data Bus Line / Non-connection at 4-bit operation
12	DB3	Data Bus Line / Non-connection at 4-bit operation
13	DB4	Data Bus Line
14	DB5	Data Bus Line
15	DB6	Data Bus Line
16	DB7	Data Bus Line

CN2

No.	Symbol	Function
17	LED (A)	LED Anode Terminal
18	LED (K)	LED Cathode Terminal

4.2. Example of Power Supply

It is recommended to apply a potentiometer for the contrast adjust due to the tolerance of the driving voltage and its temperature dependence.

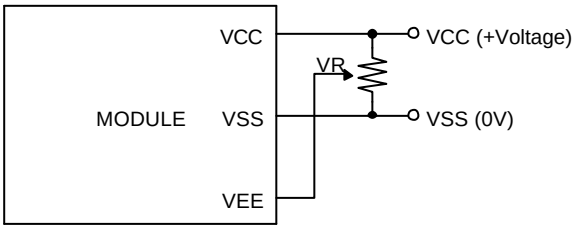

VR=10~20KΩ

4.3. Block Diagram

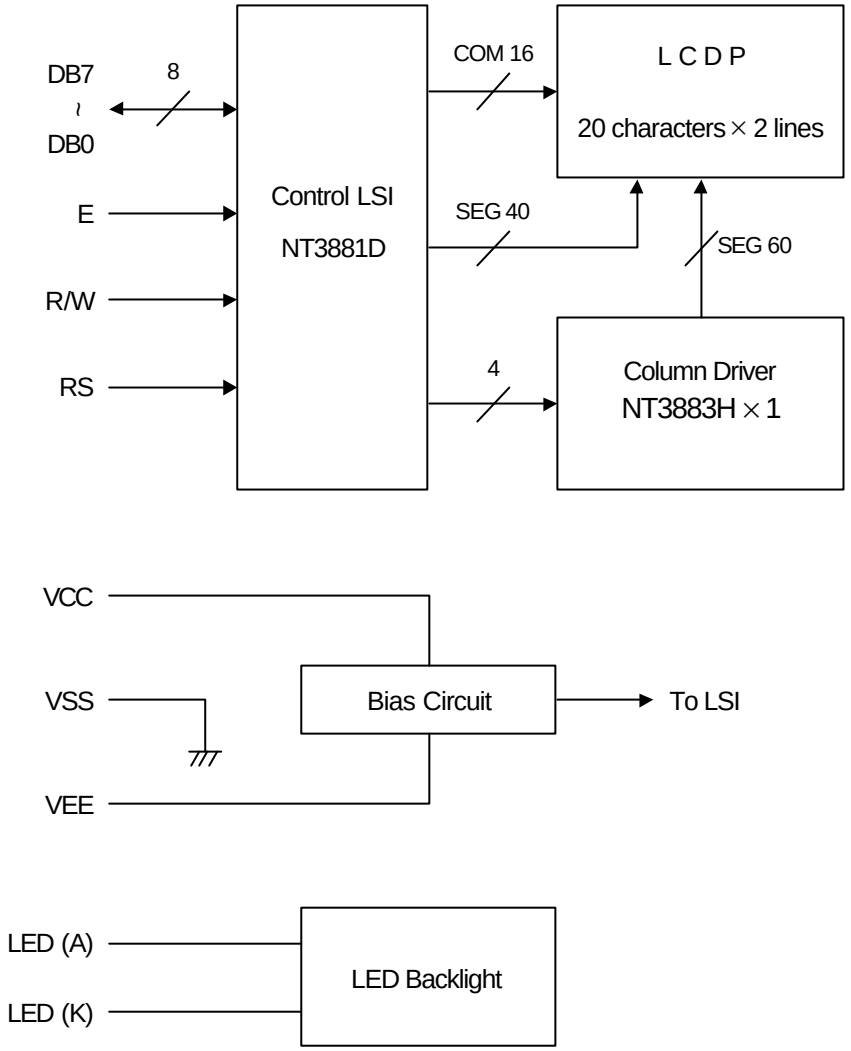

5.Test

No change on display and in operation under the following test condition.

Conditions: Unless otherwise specified, tests will be conducted under the following condition.
Temperature: 20±5°C
Humidity : 65±5%RH
tests will be not conducted under functioning state.

No.	Parameter	Conditions	Notes
1	High Temperature Operating	70°C±2°C, 96hrs (operation state)	
2	Low Temperature Operating	-20°C±2°C, 96hrs (operation state)	1
3	High Temperature Storage	70°C±2°C, 96hrs	2
4	Low Temperature Storage	-20°C±2°C, 96hrs	1,2
5	Damp Proof Test	40°C±2°C,90~95%RH, 96hrs	1,2
6	Vibration Test	Total fixed amplitude : 1.5mm Vibration Frequency : 10~55Hz One cycle 60 seconds to 3 directions of X, Y, Z for each 15 minutes	3
7	Shock Test	To be measured after dropping from 60cm high on the concrete surface in packing state. 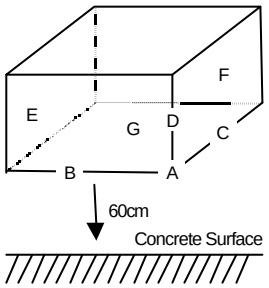 Dropping method corner dropping A corner : once Edge dropping B,C,D edge : once Face dropping E,F,G face : once	

Note 1 :No dew condensation to be observed.
Note 2 :The function test shall be conducted after 4 hours storage at the normal Temperature and humidity after removed from the test chamber.
Note 3 :Vibration test will be conducted to the product itself without putting it in a container.

6.Appearance Standards

6.1.Inspection conditions

The LCD shall be inspected under 40W white fluorescent light.
The distance between the eyes and the sample shall be more than 30cm.
All directions for inspecting the sample should be within 45°against perpendicular line.

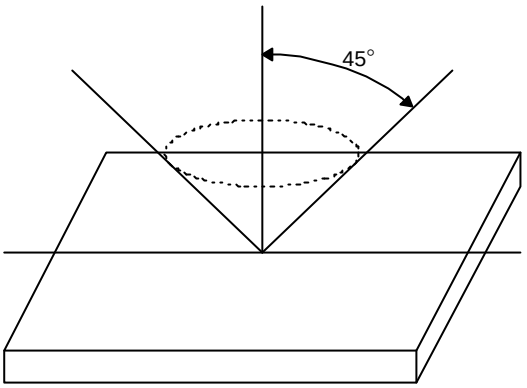

6.2.Definition of applicable Zones

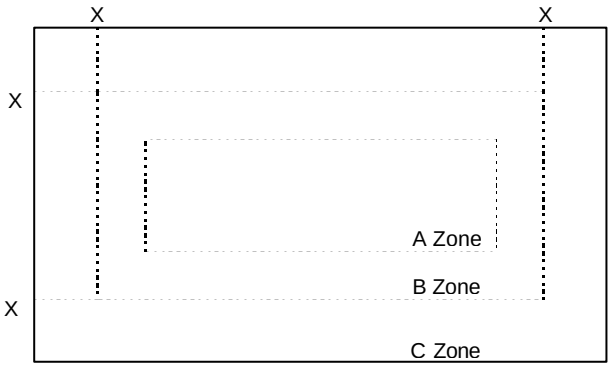

X : Maximum Seal Line

A Zone : Active display area
B Zone : Out of active display area ~ Maximum seal line
C Zone : Rest parts

A Zone + B Zone = Validity viewing area

6.3. Standards(E rank, LED)

D = (Long + Short) / 2 * : Disregard Units : mm

No.	Parameter	Criteria
1	The Shape of Dot	(1) Pin Hole

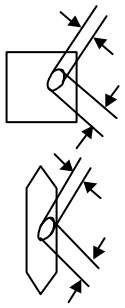

Dimension	Acceptable Number
D ≤ 0.10	*
0.10 < D ≤ 0.15	1 pc / dot(only segment)or less 2 pcs / cell or less

(2) Pattern Shift

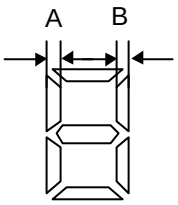

| A – B | ≤ 0.15

(3) Breakage or Chips / Deformation

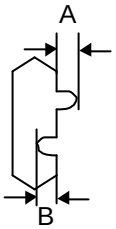

1.Segment Type

Dimension	Acceptable Number
A ≤ 0.10	*
B ≤ 0.10	*

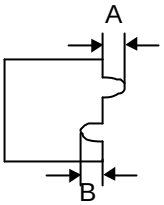

2.Dot Type

Dimension	Acceptable Number
A≤0.10	* (Should not be connected to next dot)
0.10<A≤0.15	1 pc / dot(only segment)or less 2 pcs / cell or less (Should not be connected to next dot)
B ≤ 0.10	*

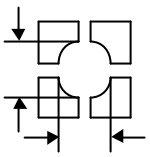

3.Defective type extends over multiple numbers of dots

Dimension	Acceptable Number
D≤0.10	*
0.10<D≤0.15	1 pc / dot(only segment)or less 2 pcs / cell or less (Individual dot must secure 1/2 area or more)

D = (Long + Short) / 2 * : Disregard Units : mm

<table>
<tr><th>No.</th><th>Parameter</th><th>Criteria</th></tr>
<tr><td>2</td><td>Black and White Spots, Foreign Substances</td><td>(1) Round Shape
<table>
<tr><th rowspan="2">Zone / Dimension</th><th colspan="3">Acceptable Number</th></tr>
<tr><th>A</th><th>B</th><th>C</th></tr>
<tr><td>D ≤ 0.10</td><td>*</td><td>*</td><td>*</td></tr>
<tr><td>0.10< D ≤ 0.20</td><td>6</td><td>6</td><td>*</td></tr>
<tr><td>0.20< D ≤ 0.30</td><td>2</td><td>2</td><td>*</td></tr>
</table>
Individual dot must secure 1/2 area or more.

(2) Line Shape
<table>
<tr><th rowspan="2">Zone / Length</th><th rowspan="2">Width</th><th colspan="3">Acceptable Number</th></tr>
<tr><th>A</th><th>B</th><th>C</th></tr>
<tr><td>L ≤2.0</td><td>W≤0.03</td><td>*</td><td>*</td><td>*</td></tr>
<tr><td>L ≤2.0</td><td>0.03<W≤0.05</td><td>4</td><td>4</td><td>*</td></tr>
<tr><td>*</td><td>0.05<W</td><td colspan="2">In the same way (1)</td><td>*</td></tr>
</table>
No more than 7pcs as total.
(Refer to “Complex Foreign Substance Defects”)</td></tr>
<tr><td>3</td><td>Color Variation</td><td>Not to be conspicuous defects.</td></tr>
<tr><td>4</td><td>Air Bubbles (between glass & polarizer)</td><td>
<table>
<tr><th rowspan="2">Zone / Dimension</th><th colspan="3">Acceptable Number</th></tr>
<tr><th>A</th><th>B</th><th>C</th></tr>
<tr><td>D ≤ 0.15</td><td>*</td><td>*</td><td>*</td></tr>
<tr><td>0.15< D ≤ 0.30</td><td>2</td><td>3</td><td>*</td></tr>
<tr><td>0.30< D ≤ 0.50</td><td>1</td><td>2</td><td>*</td></tr>
<tr><td>0.50< D ≤ 1.00</td><td>0</td><td>1</td><td>*</td></tr>
</table>
No more than 3pcs as total.
(Refer to “Complex Foreign Substance Defects”)</td></tr>
<tr><td>5</td><td>Polarizer Scratches</td><td>Not to be conspicuous defects.</td></tr>
<tr><td>6</td><td>Polarizer Dirts</td><td>If the stains are removed easily from LCDP surface, the module is not defective.</td></tr>
<tr><td>7</td><td>Complex Foreign Substance Defects</td><td>Black spots, line shaped foreign substances or air bubbles between glass & polarizer should be 7pcs maximum in total.</td></tr>
<tr><td>8</td><td>Distance between Different Foreign Substance Defects</td><td>20mm or more</td></tr>
</table>

D = (Long + Short) / 2 * : Disregard Units : mm

No.	Parameter	Criteria
9	Chipped Glass	(1) Other than electrode pad areas and corner areas

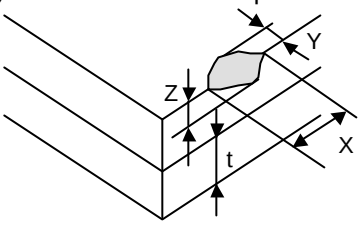

"A" size:0.82or more			"A" size:Less than 0.82		
X	Y	Z	X	Y	Z
*	≤0.4	*	*	≤0.3	*
≤2.5	≤0.7	=t	≤2.0	≤0.5	=t
≤3.5	≤1.0	≤1/2t	≤3.0	≤0.5	≤1/2t
≤5.5	≤1.5	≤1/3t	≤4.5	≤1.2	≤1/3t

(2) Corner Areas

1.Lead Areas

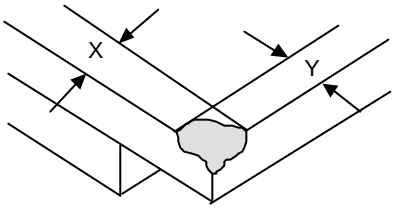

"A" size 0.82or more	"A" size Less than 0.82
X+Y	X+Y
≤4.0	≤3.0

2.Other than electrode pad Areas

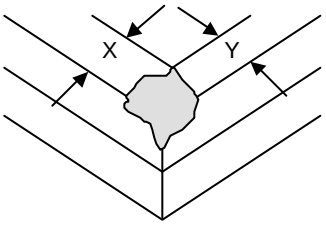

"A" size 0.82or more	"A" size Less than 0.82
X+Y	X+Y
≤3.0	≤2.0

The total number of chipped glass defects shall be up to 5 spots.

The chipped glass shall be judged only from the size of the defect.

If the chipped area touches the seal line, the LCD is not acceptable.

7.Code System of Production Lot

The production lot of module is specified as follows.

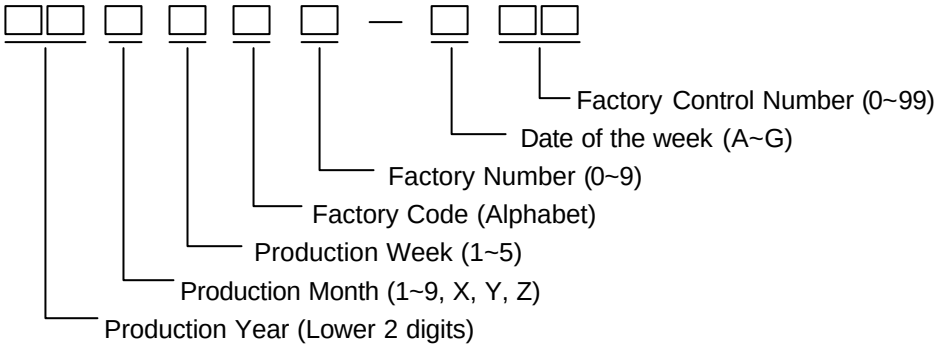

8.Type Number

The type number of module is specified as follows.

C-51505NFJ-SLW-AIN

9.Applying Precautions

Please contact us when questions and/or new problems not specified in this specificationsarise.

10.Precautions Relating Product Handling

The Following precautions will guide you in handling our product correctly.

1) Liquid crystal display devices

1. The liquid crystal display device panel used in the liquid crystal display module is made of plate glass. Avoid any strong mechanical shock. Should the glass break handle it with care.
2. The polarizer adhering to the surface of the LCD is made of a soft material. Guard against scratching it.

2) Care of the liquid crystal display module against static electricity discharge.

1. When working with the module, be sure to ground your body and any electrical equipment you may be using. We strongly recommend the use of anti static mats (made of rubber), to protect work tables against the hazards of electrical shock.
2. Avoid the use of work clothing made of synthetic fibers. We recommend cotton clothing or other conductivity-treated fibers.
3. Slowly and carefully remove the protective film from the LCD module, since this operation can generate static electricity.

3) When the LCD module alone must be stored for long periods of time:

1. Protect the modules from high temperature and humidity.
2. Keep the modules out of direct sunlight or direct exposure to ultraviolet rays.
3. Protect the modules from excessive external forces.

4) Use the module with a power supply that is equipped with an overcurrent protector circuit, since the module is not provided with this protective feature.

5) Do not ingest the LCD fluid itself should it leak out of a damaged LCD module. Should hands or clothing come in contact with LCD fluid, wash immediately with soap.

6) Conductivity is not guaranteed for models that use metal holders where solder connections between the metal holder and the PCB are not used. Please contact us to discuss appropriate ways to assure conductivity.

7) For models which use CFL:

1. High voltage of 1000V or greater is applied to the CFL cable connector area. Care should be taken not to touch connection areas to avoid burns.
2. Protect CFL cables from rubbing against the unit and thus causing the wire jacket to become worn.
3. The use of CFLs for extended periods of time at low temperatures will significantly shorten their service life.

8) For models which use touch panels:

1. Do not stack up modules since they can be damaged by components on neighboring modules.
2. Do not place heavy objects on top of the product. This could cause glass breakage.

9) For models which use COG,TAB,or COF:

1. The mechanical strength of the product is low since the IC chip faces out unprotected from the rear.
   Be sure to protect the rear of the IC chip from external forces.
2. Given the fact that the rear of the IC chip is left exposed, in order to protect the unit from electrical damage, avoid installation configurations in which the rear of the IC chip runs the risk of making any electrical contact.

10) Models which use flexible cable, heat seal, or TAB:
   1. In order to maintain reliability, do not touch or hold by the connector area.
   2. Avoid any bending, pulling, or other excessive force, which can result in broken connections.

11) In case of buffer material such as cushion / gasket is assembled into LCD module, it may have an adverse effect on connecting parts (LCD panel-TCP / HEAT SEAL / FPC / etc., PCB-TCP / HEAT SEAL / FPC etc., TCP-HEAT SEAL, TCP-FPC, HEAT SEAL-FPC, etc.,) depending on its materials.
   Please check and evaluate these materials carefully before use.

12) In case of acrylic plate is attached to front side of LCD panel, cloudiness (very small cracks) can occur on acrylic plate, being influenced by some components generated from polarizer film.. Please check and evaluate those acrylic materials carefully before use.

11.Warranty

This product has been manufactured to your company's specifications as a part for use in your company's general electronic products. It is guaranteed to perform according to delivery specifications. For any other use apart from general electronic equipment, we cannot take responsibility if the product is used in medical devices, nuclear power control equipment, aerospace equipment, fire and security systems, or any other applications in which there is a direct risk to human life and where extremely high levels of reliability are required. If the product is to be used in any of the above applications, we will need to enter into a separate product liability agreement.

1. We cannot accept responsibility for any defect, which may arise from additional manufacturing of the product (including disassembly and reassembly), after product delivery.

2. We cannot accept responsibility for any defect, which may arise after the application of strong external force to the product.

3. We cannot accept responsibility for any defect, which may arise due to the application of static electricity after the product has passed your company's acceptance inspection procedures.

4. When the product is in CFL models, CFL service life and brightness will vary according to the performance of the inverter used, leaks, etc. We cannot accept responsibility for product performance, reliability, or defect, which may arise.

5. We cannot accept responsibility for intellectual property of a third party, which may arise through the application of our product to your assembly with exception to those issues relating directly to the structure or method of manufacturing of our product.

6. Optrex will not be held responsible for any quality guarantee issue for defect products judged as Optrex-origin longer than 2 (two) years from Optrex production or 1(one) year from Optrex, Optrex America, Optrex Europe delivery which ever comes later.

Компания «ЭлектроПласт» предлагает заключение долгосрочных отношений при поставках импортных электронных компонентов на взаимовыгодных условиях!

Наши преимущества:

- Оперативные поставки широкого спектра электронных компонентов отечественного и импортного производства напрямую от производителей и с крупнейших мировых складов;
- Поставка более 17-ти миллионов наименований электронных компонентов;
- Поставка сложных, дефицитных, либо снятых с производства позиций;
- Оперативные сроки поставки под заказ (от 5 рабочих дней);
- Экспресс доставка в любую точку России;
- Техническая поддержка проекта, помощь в подборе аналогов, поставка прототипов;
- Система менеджмента качества сертифицирована по Международному стандарту ISO 9001;
- Лицензия ФСБ на осуществление работ с использованием сведений, составляющих государственную тайну;
- Поставка специализированных компонентов (Xilinx, Altera, Analog Devices, Intersil, Interpoint, Microsemi, Aeroflex, Peregrine, Syfer, Eurofarad, Texas Instrument, Miteq, Cobham, E2V, MA-COM, Hittite, Mini-Circuits,General Dynamics и др.);

Помимо этого, одним из направлений компании «ЭлектроПласт» является направление «Источники питания». Мы предлагаем Вам помощь Конструкторского отдела:

- Подбор оптимального решения, техническое обоснование при выборе компонента;
- Подбор аналогов;
- Консультации по применению компонента;
- Поставка образцов и прототипов;
- Техническая поддержка проекта;
- Защита от снятия компонента с производства.

Как с нами связаться

Телефон: 8 (812) 309 58 32 (многоканальный)
Факс: 8 (812) 320-02-42
Электронная почта: org@eplast1.ru
Адрес: 198099, г. Санкт-Петербург, ул. Калинина, дом 2, корпус 4, литера А.