LOW-VOLTAGE 8:1 MULTIPLEXER/ DEMULTIPLEXER

IDT74CBTLV3251

FEATURES:

- Functionally equivalent to QS3251
- 5Ω bi-directional switch connection between two ports
- Isolation under power-off conditions
- Over-voltage tolerant
- Latch-up performance exceeds 100mA
- V_{CC} = 2.3V - 3.6V, Normal Range
- ESD > 2000V per MIL-STD-883, Method 3015; > 200V using machine model (C = 200pF, R = 0)
- Available in QSOP and TSSOP packages

DESCRIPTION:

The CBTLV3251 is a 1-of-8 high-speed multiplexer/demultiplexer. The low on-state resistance of the switch allows connections to be made with minimal propagation delay.

The select input (S0, S1, S2) controls the data flow. The multiplexer/demultiplexer switches are disabled when the output-enable ($\overline{OE}$) input is high.

To ensure that the device is in high-impedance state during power up or power down, $\overline{OE}$ should be tied to V_{CC} through a pullup resistor; the minimum value of the resistor is determined by the current-sinking capability of the driver.

FUNCTIONAL BLOCK DIAGRAM

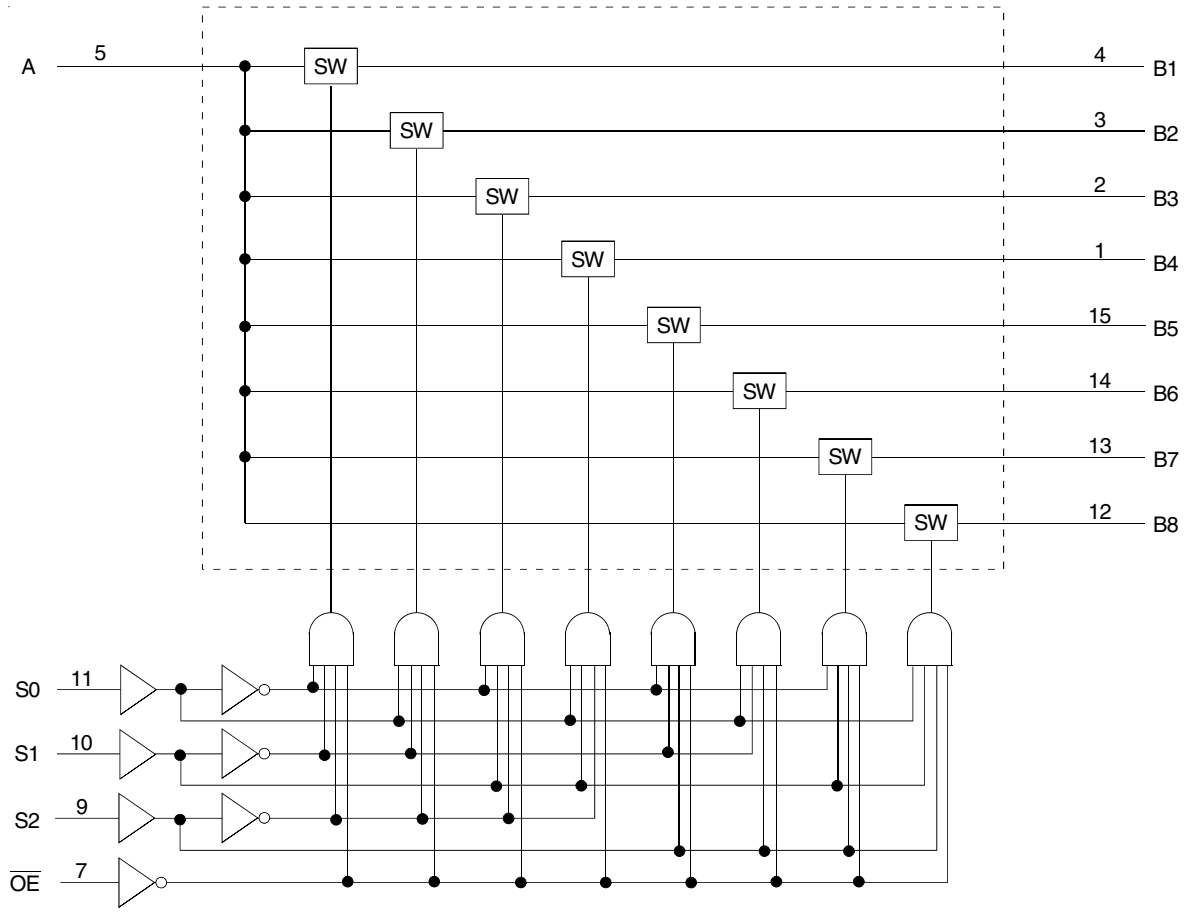

The IDT logo is a registered trademark of Integrated Device Technology, Inc.

INDUSTRIAL TEMPERATURE RANGE DECEMBER 2014

© 2014 Integrated Device Technology, Inc.

PIN CONFIGURATION

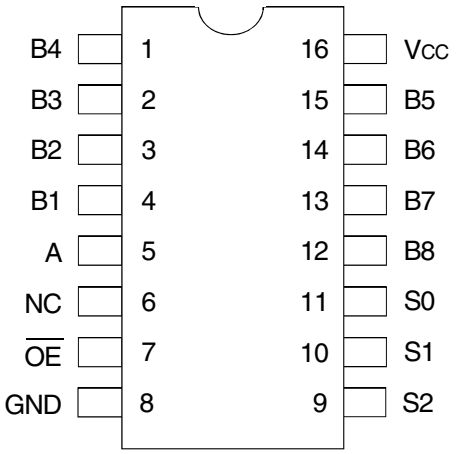

QSOP / TSSOP
TOP VIEW

ABSOLUTE MAXIMUM RATINGS(1)

Symbol	Description	Max	Unit
V_{CC}	Supply Voltage Range	–0.5 to +4.6	V
V_I	Input Voltage Range	–0.5 to +4.6	V
	Continuous Channel Current	128	mA
I_{IK}	Input Clamp Current, $V_{I/O} < 0$	–50	mA
T_{STG}	Storage Temperature	–65 to +150	°C

NOTE:
1. Stresses greater than those listed under ABSOLUTE MAXIMUM RATINGS may cause permanent damage to the device. This is a stress rating only and functional operation of the device at these or any other conditions above those indicated in the operational sections of this specification is not implied. Exposure to absolute maximum rating conditions for extended periods may affect reliability.

SIMPLIFIED SCHEMATIC, EACH SWITCH

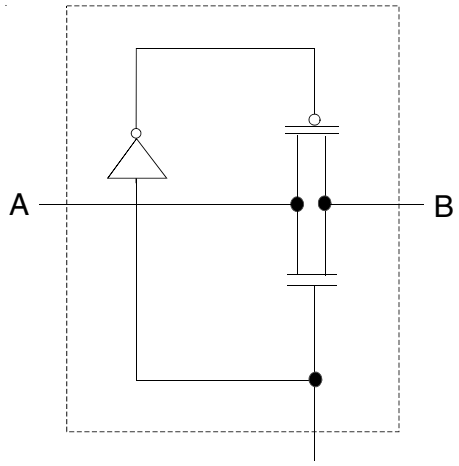

CONTROL
CIRCUITRY

FUNCTION TABLE(1)

Inputs				Function
$\overline{OE}$	S2	S1	S0	
L	L	L	L	A Port = B1 Port
L	L	L	H	A Port = B2 Port
L	L	H	L	A Port = B3 Port
L	L	H	H	A Port = B4 Port
L	H	L	L	A Port = B5 Port
L	H	L	H	A Port = B6 Port
L	H	H	L	A Port = B7 Port
L	H	H	H	A Port = B8 Port
H	X	X	X	Disconnect

NOTE:
1. H = HIGH Voltage Level
L = LOW Voltage Level
X = Don't Care

OPERATING CHARACTERISTICS, T_A = 25°C(1)

Symbol	Parameter	Test Conditions	Min.	Max.	Unit
V_{CC}	Supply Voltage		2.3	3.6	V
V_{IH}	High-Level Control Input Voltage	V_{CC} = 2.3V to 2.7V	1.7	—	V
		V_{CC} = 2.7V to 3.6V	2	—	
V_{IL}	Low-Level Control Input Voltage	V_{CC} = 2.3V to 2.7V	—	0.7	V
		V_{CC} = 2.7V to 3.6V	—	0.8	
T_A	Operating Free-Air Temperature		–40	85	°C

NOTE:
1. All unused control inputs of the device must be held at V_{CC} or GND to ensure proper device operation.

DC ELECTRICAL CHARACTERISTICS OVER OPERATING RANGE

Following Conditions Apply Unless Otherwise Specified:
Operating Conditions: T_A = –40°C to +85°C

Symbol	Parameter	Test Conditions		Min.	Typ.(1)	Max.	Unit
V_{IK}	Control Inputs, Data Inputs	V_{CC} = 3V, I_I = –18mA		—	—	–1.2	V
I_I	Control Inputs	V_{CC} = 3.6V, V_I = V_{CC} or GND		—	—	±1	µA
I_{OZ}	Data I/O	V_{CC} = 3.6V, V_O = 0 or 3.6V, switch disabled		—	—	5	µA
I_{OFF}		V_{CC} = 0, V_I or V_O = 0 to 3.6V		—	—	50	µA
I_{CC}		V_{CC} = 3.6V, I_O = 0, V_I = V_{CC} or GND		—	—	10	µA
ΔI_{CC}(2)	Control Inputs	V_{CC} = 3.6V, one input at 3V, other inputs at V_{CC} or GND		—	—	300	µA
C_I	Control Inputs	V_I = 3V or 0		—	4	—	pF
$C_{IO(OFF)}$	A Port	V_O = 3V or 0, $\overline{OE}$ = V_{CC} = 3.3V		—	40.5	—	pF
	B Port			—	6	—	
R_{ON}(3)	V_{CC} = 2.3V Typ. at V_{CC} = 2.5V	V_I = 0	I_O = 64mA	—	5	8	Ω
			I_O = 24mA	—	5	8	
		V_I = 1.7V	I_O = 15mA	—	27	40	
	V_{CC} = 3V	V_I = 0	I_O = 64mA	—	5	7	
			I_O = 24mA	—	5	7	
		V_I = 2.4V	I_O = 15mA	—	10	15	

NOTES:
1. Typical values are at V_{CC} = 3.3V, +25°C ambient.
2. The increase in supply current is attributable to each current that is at the specified voltage level rather than V_{CC} or GND.
3. This is measured by the voltage drop between the A and B terminals at the indicated current through the switch. On-state resistance is determined by the lower of the voltages of the two (A or B) terminals.

SWITCHING CHARACTERISTICS

Symbol	Parameter	V_{CC} = 2.5V ± 0.2V		V_{CC} = 3.3V ± 0.3V		Unit
		Min.	Max.	Min.	Max.	
t_{PD}(1)	Propagation Delay A to B or B to A	–	0.15	–	0.25	ns
t_{SEL}	Select Time S to A or B	1	4.8	1	4.5	ns
t_{EN}	Enable Time S to B	1	4.8	1	4.5	ns
t_{DIS}	Disable Time S to B	1	5.1	1	5.3	ns
t_{EN}	Output Enable Time $\overline{OE}$ to A or B	1	5	1	4.8	ns
t_{DIS}	Output Disable Time $\overline{OE}$ to A or B	1	5.5	1	6	ns

NOTE:
1. The propagation delay is the calculated RC time constant of the typical on-state resistance of the switch and the specified load capacitance driven by an ideal voltage source (zero output impedance).

TEST CIRCUITS AND WAVEFORMS

TEST CONDITIONS

Symbol	$V_{CC}^{(1)}$ = 3.3V±0.3V	$V_{CC}^{(2)}$ = 2.5V±0.2V	Unit
V_{LOAD}	6	2 x Vcc	V
V_{IH}	3	Vcc	V
V_T	1.5	Vcc / 2	V
V_{LZ}	300	150	mV
V_{HZ}	300	150	mV
C_L	50	30	pF

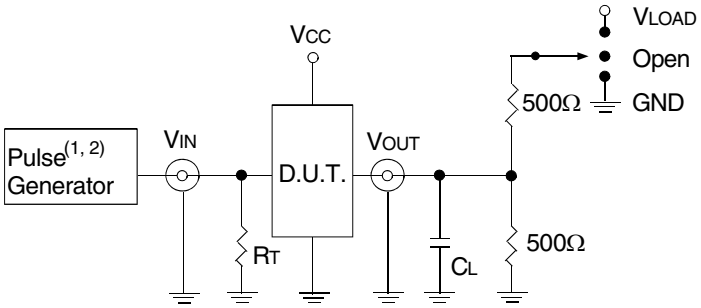

Test Circuits for All Outputs

DEFINITIONS:
C_L = Load capacitance: includes jig and probe capacitance.
R_T = Termination resistance: should be equal to Z_{OUT} of the Pulse Generator.

NOTES:
1. Pulse Generator for All Pulses: Rate ≤ 10MHz; t_F ≤ 2.5ns; t_R ≤ 2.5ns.
2. Pulse Generator for All Pulses: Rate ≤ 10MHz; t_F ≤ 2ns; t_R ≤ 2.5ns.

SWITCH POSITION

Test	Switch
t_{PLZ}/t_{PZL}	V_{LOAD}
t_{PHZ}/t_{PZH}	GND
t_{SEL}	Open
t_{PD}	Open

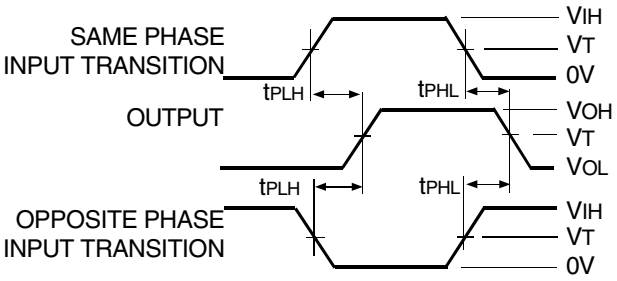

Propagation Delay

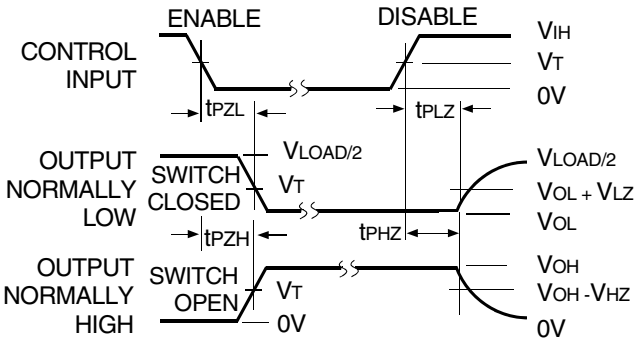

Enable and Disable Times

ORDERING INFORMATION

XX CBTLV XXX XX X

Temp. Range | Device Type | Package

Blank	Tube or Tray
8	Tape and Reel
QG	Quarter-Size Small Outline Package - Green
PGG	Thin Shrink Small Outline Package - Green
3251	Low-Voltage 1-of-8 Multiplexer/Demultiplexer
74	–40°C to +85°C

Datasheet Document History

12/18/2014	Pg. 5	Updated the ordering information by removing non RoHS part and adding Tape and Reel information.

CORPORATE HEADQUARTERS
6024 Silver Creek Valley Road
San Jose, CA 95138

for SALES:
800-345-7015 or 408-284-8200
fax: 408-284-2775
www.idt.com

for Tech Support:
logichelp@idt.com

Компания «ЭлектроПласт» предлагает заключение долгосрочных отношений при поставках импортных электронных компонентов на взаимовыгодных условиях!

Наши преимущества:

- Оперативные поставки широкого спектра электронных компонентов отечественного и импортного производства напрямую от производителей и с крупнейших мировых складов;
- Поставка более 17-ти миллионов наименований электронных компонентов;
- Поставка сложных, дефицитных, либо снятых с производства позиций;
- Оперативные сроки поставки под заказ (от 5 рабочих дней);
- Экспресс доставка в любую точку России;
- Техническая поддержка проекта, помощь в подборе аналогов, поставка прототипов;
- Система менеджмента качества сертифицирована по Международному стандарту ISO 9001;
- Лицензия ФСБ на осуществление работ с использованием сведений, составляющих государственную тайну;
- Поставка специализированных компонентов (Xilinx, Altera, Analog Devices, Intersil, Interpoint, Microsemi, Aeroflex, Peregrine, Syfer, Eurofarad, Texas Instrument, Miteq, Cobham, E2V, MA-COM, Hittite, Mini-Circuits,General Dynamics и др.);

Помимо этого, одним из направлений компании «ЭлектроПласт» является направление «Источники питания». Мы предлагаем Вам помощь Конструкторского отдела:

- Подбор оптимального решения, техническое обоснование при выборе компонента;
- Подбор аналогов;
- Консультации по применению компонента;
- Поставка образцов и прототипов;
- Техническая поддержка проекта;
- Защита от снятия компонента с производства.

Как с нами связаться

Телефон: 8 (812) 309 58 32 (многоканальный)
Факс: 8 (812) 320-02-42
Электронная почта: org@eplast1.ru
Адрес: 198099, г. Санкт-Петербург, ул. Калинина, дом 2, корпус 4, литера А.