Alaska®
88E1510/88E1518/ 88E1512/88E1514

Integrated 10/100/1000 Mbps Energy Efficient Ethernet Transceiver

Datasheet - Public

Doc. No. MV-S107146-U0, Rev. B
February 23, 2018

Document Classification: Public

Document Conventions

	Note: Provides related information or information of special importance.
	Caution: Indicates potential damage to hardware or software, or loss of data.
	Warning: Indicates a risk of personal injury.

For more information, visit our website at: http://www.marvell.com

Disclaimer

No part of this document may be reproduced or transmitted in any form or by any means, electronic or mechanical, including photocopying and recording, for any purpose, without the express written permission of Marvell. Marvell retains the right to make changes to this document at any time, without notice. Marvell makes no warranty of any kind, expressed or implied, with regard to any information contained in this document, including, but not limited to, the implied warranties of merchantability or fitness for any particular purpose. Further, Marvell does not warrant the accuracy or completeness of the information, text, graphics, or other items contained within this document.

Marvell products are not designed for use in life-support equipment or applications that would cause a life-threatening situation if any such products failed. Do not use Marvell products in these types of equipment or applications.

With respect to the products described herein, the user or recipient, in the absence of appropriate U.S. government authorization, agrees:

1) Not to re-export or release any such information consisting of technology, software or source code controlled for national security reasons by the U.S. Export Control Regulations ("EAR"), to a national of EAR Country Groups D:1 or E:2;

2) Not to export the direct product of such technology or such software, to EAR Country Groups D:1 or E:2, if such technology or software and direct products thereof are controlled for national security reasons by the EAR; and,

3) In the case of technology controlled for national security reasons under the EAR where the direct product of the technology is a complete plant or component of a plant, not to export to EAR Country Groups D:1 or E:2 the direct product of the plant or major component thereof, if such direct product is controlled for national security reasons by the EAR, or is subject to controls under the U.S. Munitions List ("USML").

At all times hereunder, the recipient of any such information agrees that they shall be deemed to have manually signed this document in connection with their receipt of any such information.

Copyright © 1999–2018. Marvell International Ltd. All rights reserved. Alaska, ARMADA, Avanta, Avastar, CarrierSpan, FLC, HyperDuo, Kirkwood, Link Street, LinkCrypt, Marvell logo, Marvell, Marvell EZ-Connect, Marvell Smart, Marvell VSoC, MoChi, Moving Forward Faster, PISC, Prestera, Virtual Cable Tester, The World as YOU See It, Xelerated, and Yukon are registered trademarks of Marvell or its affiliates. ArmadaBoard, Marvell COFFEEbin, Marvell ESPRESSObin, Marvell MACCHIATObin, and NANDEdge are trademarks of Marvell or its affiliates.

Patent(s) Pending—Products identified in this document may be covered by one or more Marvell patents and/or patent applications.

Marvell. Moving Forward Faster

PRODUCT OVERVIEW

The Alaska® 88E1510/88E1518/88E1512/88E1514 device is a physical layer device containing a single 10/100/1000 Gigabit Ethernet transceiver. The transceiver implements the Ethernet physical layer portion of the 1000BASE-T, 100BASE-TX, and 10BASE-T standards. It is manufactured using standard digital CMOS process and contains all the active circuitry required to implement the physical layer functions to transmit and receive data on standard CAT 5 unshielded twisted pair.

The device supports the RGMII (Reduced pin count GMII) and SGMII for direct connection to a MAC/Switch port. The SGMII can also be used on media/line side to connect to SFP modules that support 1000BASE-X, 100BASE-FX and SGMII. It also supports Copper/Fiber Auto-media applications with RGMII as the MAC interface. SGMII operates at 1.25 Gbps over a single differential pair thus reducing power and number of I/Os used on the MAC interface.

The device integrates MDI termination resistors into the PHY. This resistor integration simplifies board layout and reduces board cost by reducing the number of external components. The new Marvell® calibrated resistor scheme will achieve and exceed the accuracy requirements of the IEEE 802.3 return loss specifications.

The device has an integrated switching voltage regulator to generate all required voltages. The device can run off a single 3.3V supply. The device supports 1.8V, 2.5V, and 3.3V LVCMOS I/O Standards.

The 88E1510/88E1518/88E1512/88E1514 device supports Synchronous Ethernet (SyncE) and Precise Timing Protocol (PTP) Time Stamping, which is based on IEEE1588 version 2 and IEEE802.1AS.

The 88E1510/88E1518/88E1512/88E1514 device supports IEEE 802.3az-2010 Energy Efficient Ethernet (EEE) and is IEEE 802.3az-2010 compliant.

The device incorporates the Marvell Advanced Virtual Cable Tester® (VCT™) feature, which uses Time Domain Reflectometry (TDR) technology for the remote identification of potential cable malfunctions, thus reducing equipment returns and service calls. Using VCT, the Alaska device detects and reports potential cabling issues such as pair swaps, pair polarity and excessive pair skew. The device will also detect cable opens, shorts or any impedance mismatch in the cable and reporting accurately within one meter the distance to the fault.

The device uses advanced mixed-signal processing to perform equalization, echo and crosstalk cancellation, data recovery, and error correction at a Gigabits per second data rate. The device achieves robust performance in noisy environments with very low power dissipation.

Features

- 10/100/1000BASE-T IEEE 802.3 compliant
- Multiple Operating Modes
  - RGMII to Copper
  - SGMII to Copper (88E1512/88E1514 device only)
  - RGMII to Fiber/SGMII (88E1512 device only)
  - RGMII to Copper/Fiber/SGMII with Auto-Media Detect (88E1512 device only)
  - Copper to Fiber (1000BASE-X) (88E1512/88E1514)
- Four RGMII timing modes including integrated delays - This eliminates the need for adding trace delays on the PCB
- Supports 1000BASE-X and 100BASE-FX on the Fiber interface along with SGMII (88E1512 device only)
- Supports LVCMOS I/O Standards on the RGMII

Copyright © 2018 Marvell

- Supports Energy Efficient Ethernet (EEE) - IEEE 802.3az-2010 compliant
  - EEE Buffering
  - Incorporates EEE buffering for seamless support of legacy MACs
- Ultra Low Power
- Integrated MDI termination resistors that eliminate passive components
- Integrated Switching Voltage Regulators
- Supports Green Ethernet
  - Active Power Save Mode
  - Energy Detect and Energy Detect+ low power modes
- IEEE1588 version 2 Time Stamping
- Synchronous Ethernet (SyncE) Clock Recovery
- Three loopback modes for diagnostics
- "Downshift" mode for two-pair cable installations
- Fully integrated digital adaptive equalizers, echo cancellers, and crosstalk cancellers
- Advanced digital baseline wander correction
- Automatic MDI/MDIX crossover at all speeds of operation
- Automatic polarity correction
- IEEE 802.3 compliant Auto-Negotiation
- Software programmable LED modes including LED testing
- MDC/XMDIO Management Interface
- CRC checker, packet counter
- Packet generation
- Wake on LAN (WOL) event detection
- Advanced Virtual Cable Tester® (VCT™)
- Auto-Calibration for MAC Interface outputs
- Temperature Sensor
- Supports single 3.3V supply when using internal switching regulator
- I/O pads can be supplied with 1.8V, 2.5V, or 3.3V
- Commercial grade, Industrial grade (88E1510 and 88E1512 only)
- 48-Pin QFN 7 mm x 7 mm Green package with EPAD (88E1510 and 88E1518) and 56-Pin QFN 8 mm x 8 mm Green package with EPAD (88E1512/88E1514 device)

Table 1: 88E1510/88E1518/88E1512/88E1514 Device Features

Features	88E1510	88E1518	88E1512	88E1514
RGMII to Copper	Yes	Yes	Yes	No
SGMII to Copper	No	No	Yes	Yes
RGMII to Fiber/SGMII	No	No	Yes	No
RGMII to Copper/Fiber/SGMII with Auto-Media Detect	No	No	Yes	No
Copper to Fiber	No	No	Yes	Yes
I/O Voltage (VDDO)	3.3V/2.5V	1.8V only	3.3V/2.5V/1.8V	3.3V/2.5V/1.8V
IEEE 802.3az-2010 Energy Efficient Ethernet (EEE)	Yes	Yes	Yes	Yes
EEE Buffering	Yes	Yes	Yes	Yes
Synchronous Ethernet (SyncE)	Yes	Yes	Yes	Yes
Precise Timing Protocol (PTP)	Yes	Yes	Yes	Yes
Auto-Media Detect	No	No	Yes	No
Wake on LAN (WOL)	Yes	Yes	Yes	Yes
Package	48-pin QFN		56-pin QFN	
Industrial/Commercial Temperature	Commercial Industrial	Commercial	Commercial Industrial	Commercial

Copyright © 2018 Marvell

Figure 1: RGMII to Copper Device Application

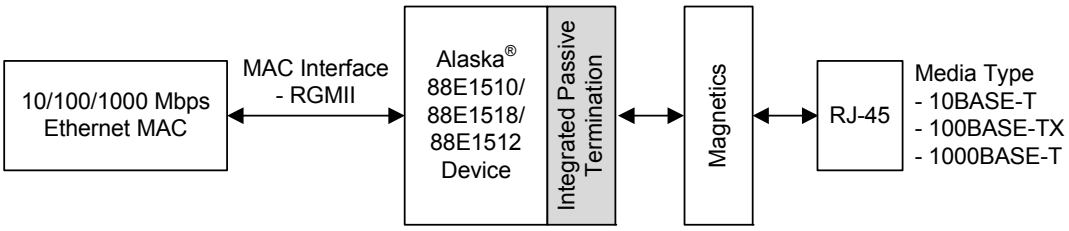

Figure 2: SGMII to Copper Application

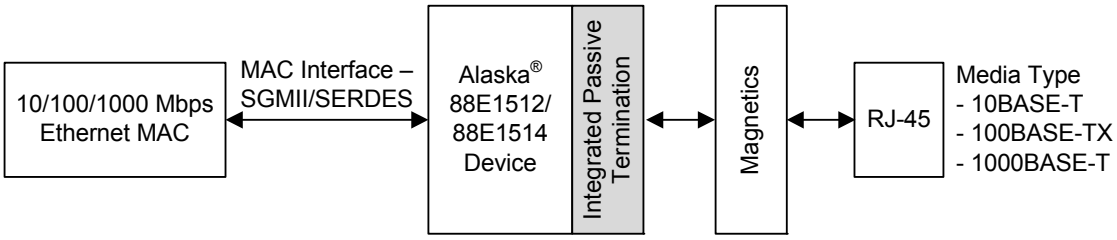

Figure 3: RGMII to Fiber/SGMII Application

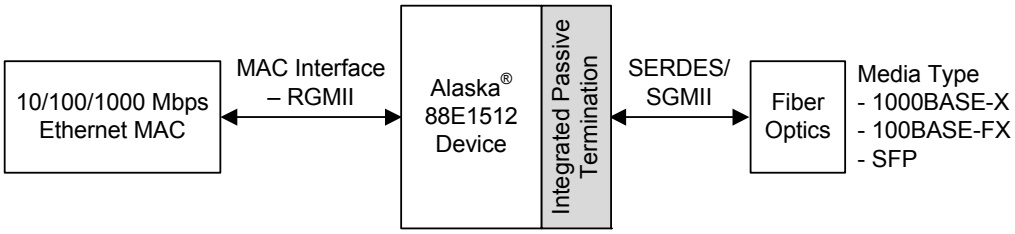

Figure 4: RGMII to Copper/Fiber/SGMII Auto-Media Application

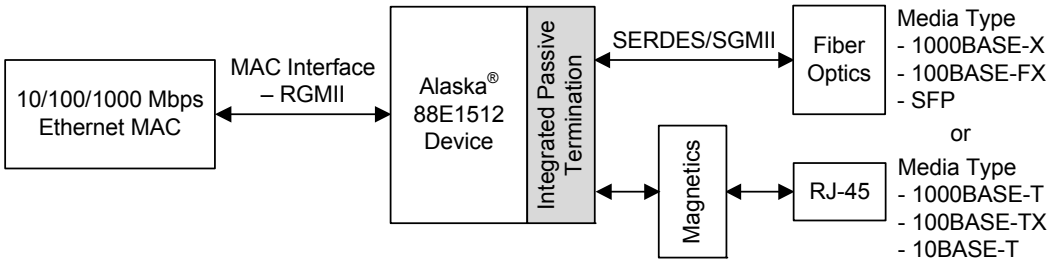

Table of Contents

1 Signal Description 17

1.1 Pin Description 17
1.1.1 88E1510/88E1518 48-Pin QFN Package Pinout 18
1.1.2 88E1512 56-Pin QFN Package Pinout 23
1.1.3 88E1514 56-Pin QFN Package Pinout 28

1.2 Pin Assignment List 33
1.2.1 88E1510 48-Pin QFN Pin Assignment List - Alphabetical by Signal Name 33
1.2.2 88E1518 48-Pin QFN Pin Assignment List - Alphabetical by Signal Name 34
1.2.3 88E1512 56-Pin QFN Pin Assignment List - Alphabetical by Signal Name 35
1.2.4 88E1514 56-Pin QFN Pin Assignment List - Alphabetical by Signal Name 36

2 PHY Functional Specifications 37

2.1 Modes of Operation and Major Interfaces 37

2.2 Copper Media Interface 39
2.2.1 Transmit Side Network Interface 39
2.2.1.1 Multi-mode TX Digital to Analog Converter 39
2.2.1.2 Slew Rate Control and Waveshaping 40
2.2.2 Encoder 40
2.2.2.1 1000BASE-T 40
2.2.2.2 100BASE-TX 40
2.2.2.3 10BASE-T 40
2.2.3 Receive Side Network Interface 40
2.2.3.1 Analog to Digital Converter 40
2.2.3.2 Active Hybrid 40
2.2.3.3 Echo Canceller 40
2.2.3.4 NEXT Canceller 40
2.2.3.5 Baseline Wander Canceller 41
2.2.3.6 Digital Adaptive Equalizer 41
2.2.3.7 Digital Phase Lock Loop 41
2.2.3.8 Link Monitor 41
2.2.3.9 Signal Detection 41
2.2.4 Decoder 41
2.2.4.1 1000BASE-T 41
2.2.4.2 100BASE-TX 42
2.2.4.3 10BASE-T 42

2.3 1.25 GHz SERDES Interface 42
2.3.1 Electrical Interface 42

2.4 MAC Interfaces 43
2.4.1 SGMII 43
2.4.1.1 SGMII Speed and Link 43
2.4.1.2 SGMII TRR Blocking 43
2.4.1.3 False SERDES Link Up Prevention 43
2.4.2 RGMII 44
2.4.3 10/100 Mbps Functionality 45
2.4.4 TX_ER and RX_ER Coding 45

2.5 Loopback 45
2.5.1 System Interface Loopback 45

Copyright © 2018 Marvell

2.5.2 Line Loopback ... 47
2.5.3 External Loopback ... 48

2.6 Resets ... 49

2.7 Power Management ... 49
2.7.1 Low Power Modes ... 49
2.7.1.1 IEEE Power Down Mode ... 50
2.7.1.2 Copper Energy Detect Modes ... 50
2.7.2 RGMII/SGMII MAC Interface Power Down ... 51

2.8 Auto-Negotiation ... 51
2.8.1 10/100/1000BASE-T Auto-Negotiation ... 52
2.8.2 1000BASE-X Auto-Negotiation ... 53
2.8.3 SGMII Auto-Negotiation ... 53
2.8.3.1 Serial Interface Auto-Negotiation Bypass Mode ... 54

2.9 CRC Error Counter and Frame Counter ... 54
2.9.1 Enabling the CRC Error Counter and Packet Counter ... 54

2.10 Packet Generator ... 54

2.11 1.25G PRBS Generator and Checker ... 55

2.12 MDI/MDIX Crossover ... 56

2.13 Polarity Correction ... 56

2.14 FLP Exchange Complete with No Link ... 57

2.15 Duplex Mismatch Indicator ... 57

2.16 LED ... 58
2.16.1 LED Polarity ... 59
2.16.2 Pulse Stretching and Blinking ... 59
2.16.3 Bi-Color LED Mixing ... 60
2.16.4 Modes of Operation ... 62
2.16.4.1 Compound LED Modes ... 63
2.16.4.2 Speed Blink ... 63
2.16.4.3 Manual Override ... 63
2.16.4.4 MODE 1, MODE 2, MODE 3, MODE 4 ... 64

2.17 Interrupt ... 64

2.18 Configuring the 88E1510/88E1518/88E1512/88E1514 Device ... 65
2.18.1 Hardware Configuration ... 65
2.18.2 Software Configuration - Management Interface ... 66
2.18.2.1 Preamble Suppression ... 67

2.19 Jumbo Packet Support ... 67

2.20 Temperature Sensor ... 67

2.21 Regulators and Power Supplies ... 68
2.21.1 AVDD18 ... 68
2.21.2 AVDDC18 ... 68
2.21.3 AVDD33 ... 68
2.21.4 DVDD ... 69
2.21.5 REG_IN ... 69
2.21.6 AVDD18_OUT ... 69
2.21.7 DVDD_OUT ... 69
2.21.8 VDDO ... 69
2.21.9 Power Supply Sequencing ... 69

3 88E1510/88E1518/88E1512/88E1514 Register Description 70
3.1 PHY MDIO Register Description 70

4 Electrical Specifications 118
4.1 Absolute Maximum Ratings 118
4.2 Recommended Operating Conditions 119
4.3 Package Thermal Information 120
4.3.1 Thermal Conditions for 88E1510/88E1518 48-pin, QFN Package 120
4.3.2 Thermal Conditions for 88E1512/88E1514 56-pin, QFN Package 121
4.4 88E1510/88E1518 Current Consumption 122
4.4.1 Current Consumption when using External Regulators 122
4.4.2 Current Consumption when using Internal Regulators 123
4.5 88E1512 Current Consumption 124
4.5.1 Current Consumption when using External Regulators 124
4.5.2 Current Consumption when using Internal Regulators 126
4.6 88E1514 Current Consumption 127
4.6.1 Current Consumption when using External Regulators 127
4.6.2 Current Consumption when using Internal Regulators 128
4.7 DC Operating Conditions 129
4.7.1 Digital Pins 129
4.7.2 IEEE DC Transceiver Parameters 130
4.8 AC Electrical Specifications 131
4.8.1 Reset Timing 131
4.8.2 XTAL_IN/XTAL_OUT Timing 132
4.8.3 LED to CONFIG Timing 133
4.9 SGMII Timing 134
4.9.1 SGMII Output AC Characteristics 134
4.9.2 SGMII Input AC Characteristics 134
4.10 RGMII Timing 135
4.10.1 RGMII AC Characteristics 135
4.10.2 RGMII Delay Timing for Different RGMII Modes 136
4.10.2.1 PHY Input - TX_CLK Delay when Register 21_2.4 = 0 136
4.10.2.2 PHY Input - TX_CLK Delay when Register 21_2.4 = 1 136
4.10.2.3 PHY Output - RX_CLK Delay 137
4.10.2.4 PHY Output - RX_CLK Delay 137
4.11 MDC/MDIO Timing 138
4.12 IEEE AC Transceiver Parameters 139
4.13 Latency Timing 140
4.13.1 RGMII to 1000BASE-T Transmit Latency Timing 140
4.13.2 RGMII to 100BASE-TX Transmit Latency Timing 140
4.13.3 RGMII to 10BASE-T Transmit Latency Timing 140
4.13.4 1000BASE-T to RGMII Receive Latency Timing 141
4.13.5 100BASE-TX to RGMII Receive Latency Timing 141
4.13.6 10BASE-T to RGMII Receive Latency Timing 141
4.13.7 10/100/1000BASE-T to SGMII Latency Timing 141
4.13.8 SGMII to 10/100/1000BASE-T Latency Timing 142

5 Package Mechanical Dimensions 143
5.1 48-Pin QFN Package 143

Copyright © 2018 Marvell

5.2 56-Pin QFN Package 145

6 Part Order Numbering/Package Marking 147

6.1 Part Order Numbering 147

6.2 Package Marking 149

6.2.1 Commercial 149

6.2.2 Industrial 151

A Revision History 153

List of Tables

Product Overview **3**
Table 1: 88E1510/88E1518/88E1512/88E1514 Device Features 4

1 Signal Description **17**
Table 2: Pin Type Definitions 17
Table 3: Media Dependent Interface 19
Table 4: RGMII 20
Table 5: Management Interface and Interrupt 20
Table 6: LED Interface 20
Table 7: Clock/Configuration/Reset/I/O 21
Table 8: Control and Reference 21
Table 9: Test 21
Table 10: Power, Ground & Internal Regulators 21
Table 11: Media Dependent Interface 24
Table 12: RGMII 25
Table 13: Management Interface and Interrupt 25
Table 14: LED Interface 25
Table 15: Clock/Configuration/Reset/I/O 26
Table 16: SGMII I/Os 26
Table 17: Control and Reference 26
Table 18: Test 26
Table 19: Power, Ground, and Internal Regulators 27
Table 20: Media Dependent Interface 29
Table 21: Management Interface and Interrupt 30
Table 22: LED Interface 30
Table 23: Clock/Configuration/Reset/I/O 30
Table 24: SGMII I/Os 30
Table 25: Control and Reference 31
Table 26: Test 31
Table 27: Power, Ground, and Internal Regulators 31
Table 28: No Connect 32
Table 29: 88E1510 48-Pin QFN Pin Assignment List - Alphabetical by Signal Name 33
Table 30: 88E1518 48-Pin QFN Pin Assignment List - Alphabetical by Signal Name 34
Table 31: 88E1512 56-Pin QFN Pin Assignment List - Alphabetical by Signal Name 35
Table 32: 88E1514 56-Pin QFN Pin Assignment List - Alphabetical by Signal Name 36

2 PHY Functional Specifications **37**
Table 33: MODE[2:0] Select 39
Table 34: SGMII (System Interface) Operational Speed 43
Table 35: Fiber Noise Filtering 43

Copyright © 2018 Marvell

Table 36: RGMII Signal Mapping....44
Table 37: Reset Control Bits....49
Table 38: Power Down Control Bits....50
Table 39: Power Down Modes....51
Table 40: SGMII Auto-Negotiation modes....54
Table 41: 1.25 GHz SERDES PRBS Registers....55
Table 42: Media Dependent Interface Pin Mapping....56
Table 43: Late Collision Registers....57
Table 44: LED Polarity....59
Table 45: Pulse Stretching and Blinking....60
Table 46: Bi-Color LED Mixing....61
Table 47: Modes of Operation....62
Table 48: Compound LED Status....63
Table 49: Speed Blinking Sequence....63
Table 50: Speed Blink....63
Table 51: MODE 3 Behavior....64
Table 52: MODE 4 Behavior....64
Table 53: Copper....65
Table 54: Fiber....65
Table 55: Two-Bit Mapping....65
Table 56: Configuration Mapping....65
Table 57: Configuration Definition....66
Table 58: Serial Management Interface Protocol....67
Table 59: Temperature Sensor....67
Table 60: Power Supply Options - Integrated Switching Regulator (REG_IN)....68
Table 61: Power Supply Options - External Supplies....68

3 88E1510/88E1518/88E1512/88E1514 Register Description....70
Table 62: Register Types....70
Table 63: Register Map....70
Table 64: Copper Control Register....72
Table 65: Copper Status Register....74
Table 66: PHY Identifier 1....75
Table 67: PHY Identifier 2....76
Table 68: Copper Auto-Negotiation Advertisement Register....76
Table 69: Copper Link Partner Ability Register - Base Page....79
Table 70: Copper Auto-Negotiation Expansion Register....80
Table 71: Copper Next Page Transmit Register....80
Table 72: Copper Link Partner Next Page Register....81
Table 73: 1000BASE-T Control Register....81
Table 74: 1000BASE-T Status Register....82
Table 75: Extended Status Register....83
Table 76: Copper Specific Control Register 1....83
Table 77: Copper Specific Status Register 1....85

Table 78: Copper Specific Interrupt Enable Register 86
Table 79: Copper Interrupt Status Register 87
Table 80: Copper Specific Control Register 2 88
Table 81: Copper Specific Receive Error Counter Register 88
Table 82: Page Address 89
Table 83: Global Interrupt Status 89
Table 84: Fiber Control Register 89
Table 85: Fiber Status Register 91
Table 86: PHY Identifier 92
Table 87: PHY Identifier 92
Table 88: Fiber Auto-Negotiation Advertisement Register - 1000BASE-X Mode (Register 16_1.1:0 = 01) 92
Table 89: Fiber Auto-Negotiation Advertisement Register - SGMII (System mode) (Register 16_1.1:0 = 10) 94
Table 90: Fiber Auto-Negotiation Advertisement Register - SGMII (Media mode) (Register 16_1.1:0 = 11) 94
Table 91: Fiber Link Partner Ability Register - 1000BASE-X Mode (Register 16_1.1:0 = 01) 95
Table 92: Fiber Link Partner Ability Register - SGMII (System mode) (Register 16_1.1:0 = 10) 96
Table 93: Fiber Link Partner Ability Register - SGMII (Media mode) (Register 16_1.1:0 = 11) 96
Table 94: Fiber Auto-Negotiation Expansion Register 97
Table 95: Fiber Next Page Transmit Register 97
Table 96: Fiber Link Partner Next Page Register 98
Table 97: Extended Status Register 98
Table 98: Fiber Specific Control Register 1 99
Table 99: Fiber Specific Status Register 100
Table 100: Fiber Interrupt Enable Register 101
Table 101: Fiber Interrupt Status Register 102
Table 102: PRBS Control 102
Table 103: PRBS Error Counter LSB 103
Table 104: PRBS Error Counter MSB 103
Table 105: Fiber Specific Control Register 2 103
Table 106: MAC Specific Control Register 1 104
Table 107: MAC Specific Interrupt Enable Register 105
Table 108: MAC Specific Status Register 105
Table 109: MAC Specific Control Register 2 106
Table 110: RGMII Output Impedance Calibration Override 107
Table 111: LED[2:0] Function Control Register 108
Table 112: LED[2:0] Polarity Control Register 109
Table 113: LED Timer Control Register 110
Table 114: 1000BASE-T Pair Skew Register 111
Table 115: 1000BASE-T Pair Swap and Polarity 111
Table 116: Copper Port Packet Generation 111
Table 117: Copper Port CRC Counters 112
Table 118: Checker Control 112

Copyright © 2018 Marvell

Table 119: Copper Port Packet Generation 113
Table 120: Late Collision Counters 1 & 2 113
Table 121: Late Collision Counters 3 & 4 113
Table 122: Late Collision Window Adjust/Link Disconnect 114
Table 123: Misc Test 114
Table 124: Misc Test: Temperature Sensor Alternative Reading 114
Table 125: Packet Generation 115
Table 126: CRC Counters 116
Table 127: Checker Control 116
Table 128: Packet Generation 116
Table 129: General Control Register 1 117

4 Electrical Specifications 118

Table 130: Absolute Maximum Ratings 118
Table 131: Recommended Operating Conditions 119
Table 132: Thermal Conditions for 88E1510/88E151848-pin, QFN Package 120
Table 133: Thermal Conditions for 88E1512/88E1514 56-pin, QFN Package 121
Table 134: Current Consumption AVDD18 + AVDDC18 122
Table 135: Current Consumption AVDD33 122
Table 136: Current Consumption DVDD 122
Table 137: Current Consumption VDDO 123
Table 138: Current Consumption REG_IN 123
Table 139: Current Consumption AVDD18 + AVDDC18 124
Table 140: Current Consumption AVDD33 124
Table 141: Current Consumption DVDD 125
Table 142: Current Consumption VDDO 125
Table 143: Current Consumption REG_IN 126
Table 144: Current Consumption AVDD18 + AVDDC18 127
Table 145: Current Consumption AVDD33 127
Table 146: Current Consumption DVDD 127
Table 147: Current Consumption VDDO 128
Table 148: Current Consumption REG_IN 128
Table 149: Digital Pins 129
Table 150: IEEE DC Transceiver Parameters 130
Table 151: Reset Timing 131
Table 152: XTAL_IN/XTAL_OUT Timing 132
Table 153: LED to CONFIG Timing 133
Table 154: SGMII Output AC Characteristics 134
Table 155: SGMII Input AC Characteristics 134
Table 156: RGMII AC Characteristics 135
Table 157: PHY Input - TX_CLK Delay when Register 21_2.4 = 0 136
Table 158: PHY Input - TX_CLK Delay when Register 21_2.4 = 1 136
Table 159: PHY Output - RX_CLK Delay 137
Table 160: PHY Output - RX_CLK Delay 137

Table 161: MDC/MDIO Timing 138
Table 162: IEEE AC Transceiver Parameters 139
Table 163: RGMII to 1000BASE-T Transmit Latency Timing 140
Table 164: RGMII to 100BASE-TX Transmit Latency Timing 140
Table 165: RGMII to 10BASE-T Transmit Latency Timing 140
Table 166: 1000BASE-T to RGMII Receive Latency Timing 141
Table 167: 100BASE-TX to RGMII Receive Latency Timing 141
Table 168: 10BASE-T to RGMII Receive Latency Timing 141
Table 169: 10/100/1000BASE-T to SGMII Latency Timing 141
Table 170: SGMII to 10/100/1000BASE-T Latency Timing 142

5 Package Mechanical Dimensions 143
Table 171: 48-Pin QFN Mechanical Dimensions 144
Table 172: 56-Pin QFN Mechanical Dimensions 146

6 Part Order Numbering/Package Marking 147
Table 173: 88E1510/88E1518/88E1512/88E1514 Part Order Options 147

A Revision History 153
Table 174: Revision History 153

Copyright © 2018 Marvell

List of Figures

Product Overview **3**
Figure 1: RGMII to Copper Device Application 5
Figure 2: SGMII to Copper Application 5
Figure 3: RGMII to Fiber/SGMII Application 5
Figure 4: RGMII to Copper/Fiber/SGMII Auto-Media Application 5

1 Signal Description **17**
Figure 5: 88E1510/88E1518 Device 48-Pin QFN Package (Top View) 18
Figure 6: 88E1512 Device 56-Pin QFN Package (Top View) 23
Figure 7: 88E1514 Device 56-Pin QFN Package (Top View) 28

2 PHY Functional Specifications **37**
Figure 8: Device Functional Block Diagram 37
Figure 9: 88E1512/88E1514 SGMII/SERDES System to Copper Media Interface Example 38
Figure 10: 88E1510/88E1518 RGMII System to Copper Interface Example 38
Figure 11: 88E1512 RGMII System to SERDES Interface Example 38
Figure 12: CML I/Os 42
Figure 13: RGMII Signal Diagram 44
Figure 14: MAC Interface Loopback Diagram - Copper Media Interface 46
Figure 15: System Interface Loopback Diagram - Fiber Media Interface 46
Figure 16: Copper Line Loopback Data Path 47
Figure 17: Fiber Line Loopback Data Path 48
Figure 18: Loopback Stub (Top View with Tab up) 48
Figure 19: Test Setup for 10/100/1000 Mbps Modes using an External Loopback Stub 49
Figure 20: LED Chain 58
Figure 21: Various LED Hookup Configurations 59
Figure 22: Typical MDC/MDIO Read Operation 66
Figure 23: Typical MDC/MDIO Write Operation 66

3 88E1510/88E1518/88E1512/88E1514 Register Description **70**

4 Electrical Specifications **118**
Figure 24: Reset Timing 131
Figure 25: XTAL_IN/XTAL_OUT Timing 132
Figure 26: 132
Figure 27: LED to CONFIG Timing 133
Figure 28: Serial Interface Rise and Fall Times 134
Figure 29: RGMII Multiplexing and Timing 135
Figure 30: TX_CLK Delay Timing - Register 21_2.4 = 0 136
Figure 31: TX_CLK Delay Timing - Register 21_2.4 = 1 (add delay) 136
Figure 32: RGMII RX_CLK Delay Timing - Register 21_2.5 = 0 137
Figure 33: RGMII RX_CLK Delay Timing - Register 21_2.5 = 1 (add delay) 137

Figure 34: MDC/MDIO Timing 138
Figure 35: 139
Figure 36: RGMII/MII to 10/100/1000BASE-T Transmit Latency Timing 140
Figure 37: 10/100/1000BASE-T to RGMII Receive Latency Timing 141
Figure 38: 10/100/1000BASE-T to SGMII Latency Timing 142
Figure 39: SGMII to 10/100/1000BASE-T Latency Timing 142

5 Package Mechanical Dimensions 143
Figure 40: 88E1510/88E1518 48-pin QFN Package Mechanical Drawings 143
Figure 41: 88E1512/88E1514 56-pin QFN Package Mechanical Drawings 145

6 Part Order Numbering/Package Marking....147
Figure 42: Sample Part Number 147
Figure 43: 88E1510 48-pin QFN Commercial Package Marking and Pin 1 Location 149
Figure 44: 88E1518 48-pin QFN Commercial Package Marking and Pin 1 Location 150
Figure 45: 88E1512 56-pin QFN Commercial Package Marking and Pin 1 Location 150
Figure 46: 88E1514 56-pin QFN Commercial Package Marking and Pin 1 Location 151
Figure 47: 88E1510 48-pin QFN Industrial Package Marking and Pin 1 Location....151
Figure 48: 88E1512 56-pin QFN Industrial Package Marking and Pin 1 Location....152

A Revision History 153

Copyright © 2018 Marvell

1 Signal Description

1.1 Pin Description

Table 2: Pin Type Definitions

Pin Type	Definition
H	Input with hysteresis
I/O	Input and output
I	Input only
O	Output only
PU	Internal pull-up
PD	Internal pull-down
D	Open drain output
Z	Tri-state output
mA	DC sink capability

1.1.1 88E1510/88E1518 48-Pin QFN Package Pinout

The 88E1510/88E1518 device is a 10/100/1000BASE-T Gigabit Ethernet transceiver.

Figure 5: 88E1510/88E1518 Device 48-Pin QFN Package (Top View)

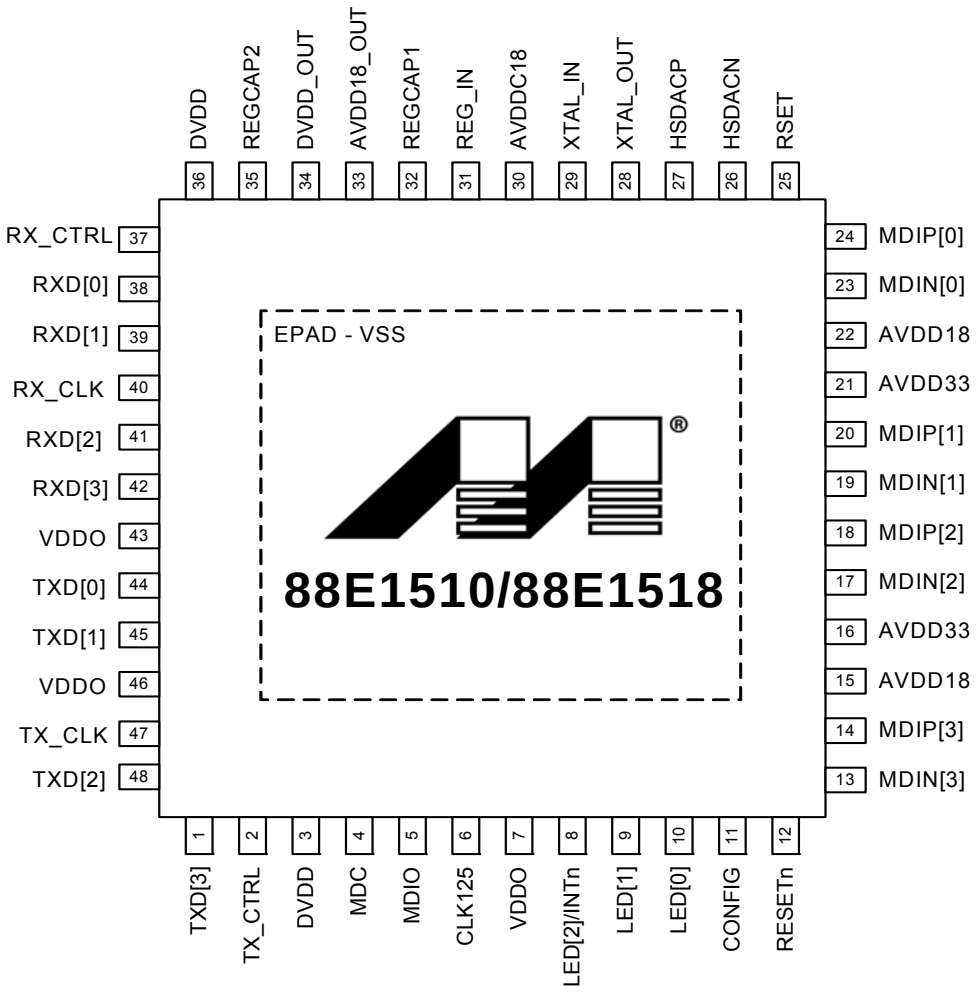

Copyright © 2018 Marvell

Table 3: Media Dependent Interface

48-QFN Pin #	Pin Name	Pin Type	Description
23 24	MDIN[0] MDIP[0]	I/O	Media Dependent Interface[0]. In 1000BASE-T mode in MDI configuration, MDIN/P[0] correspond to BI_DA±. In MDIX configuration, MDIN/P[0] correspond to BI_DB±. In 100BASE-TX and 10BASE-T modes in MDI configuration, MDIN/P[0] are used for the transmit pair. In MDIX configuration, MDIN/P[0] are used for the receive pair. The device contains an internal 100Ω resistor between the MDIP/N[0] pins.
19 20	MDIN[1] MDIP[1]	I/O	Media Dependent Interface[1]. In 1000BASE-T mode in MDI configuration, MDIN/P[1] correspond to BI_DB±. In MDIX configuration, MDIN/P[1] correspond to BI_DA±. In 100BASE-TX and 10BASE-T modes in MDI configuration, MDIN/P[1] are used for the receive pair. In MDIX configuration, MDIN/P[1] are used for the transmit pair. The device contains an internal 100Ω resistor between the MDIP/N[1] pins.
17 18	MDIN[2] MDIP[2]	I/O	Media Dependent Interface[2]. In 1000BASE-T mode in MDI configuration, MDIN/P[2] correspond to BI_DC±. In MDIX configuration, MDIN/P[2] corresponds to BI_DD±. In 100BASE-TX and 10BASE-T modes, MDIN/P[2] are not used. **NOTE:** Unused MDI pins must be left floating. The device contains an internal 100Ω resistor between the MDIP/N[2] pins.
13 14	MDIN[3] MDIP[3]	I/O	Media Dependent Interface[3]. In 1000BASE-T mode in MDI configuration, MDIN/P[3] correspond to BI_DD±. In MDIX configuration, MDIN/P[3] correspond to BI_DC±. In 100BASE-TX and 10BASE-T modes, MDIN/P[3] are not used. **NOTE:** Unused MDI pins must be left floating. The device contains an internal 100Ω resistor between the MDIP/N[3] pins.

The RGMII supports 10/100/1000BASE-T modes of operation.

Table 4: RGMII

48-QFN Pin #	Pin Name	Pin Type	Description
47	TX_CLK	I	RGMII Transmit Clock provides a 125 MHz, 25 MHz, or 2.5 MHz reference clock with ± 50 ppm tolerance depending on speed.
2	TX_CTRL	I	RGMII Transmit Control. TX_EN is presented on the rising edge of TX_CLK. A logical derivative of TX_EN and TX_ER is presented on the falling edge of TX_CLK.
1 48 45 44	TXD[3] TXD[2] TXD[1] TXD[0]	I	RGMII Transmit Data. TXD[3:0] run at double data rate with bits [3:0] of each byte to be transmitted on the rising edge of TX_CLK, and bits [7:4] presented on the falling edge of TX_CLK. In 10/100BASE-T modes, the transmit data nibble is presented on TXD[3:0] on the rising edge of TX_CLK.
40	RX_CLK	O	RGMII Receive Clock provides a 125 MHz, 25 MHz, or 2.5 MHz reference clock with ± 50 ppm tolerance derived from the received data stream depending on speed.
37	RX_CTRL	O	RGMII Receive Control. RX_DV is presented on the rising edge of RX_CLK. A logical derivative of RX_DV and RX_ER is presented on the falling edge of RX_CLK.
42 41 39 38	RXD[3] RXD[2] RXD[1] RXD[0]	O	RGMII Receive Data. RXD[3:0] run at double data rate with bits [3:0] of each byte received on the rising edge of RX_CLK, and bits [7:4] presented on the falling edge of RX_CLK. In 10/100BASE-T modes, the receive data nibble is presented on RXD[3:0] on the rising edge of RX_CLK.

Table 5: Management Interface and Interrupt

48-QFN Pin #	Pin Name	Pin Type	Description
4	MDC	I	MDC is the management data clock reference for the serial management interface. A continuous clock stream is not expected. The maximum frequency supported is 12 MHz.
5	MDIO	I/O	MDIO is the management data. MDIO transfers management data in and out of the device synchronously to MDC. This pin requires a pull-up resistor in a range from 1.5 kΩ to 10 kΩ.

Table 6: LED Interface

48-QFN Pin #	Pin Name	Pin Type	Description
10	LED[0]	O	LED output.
9	LED[1]	I/O	LED output
8	LED[2]/INTn	O	LED/Interrupt outputs. LED[2] pin also functions as an active low interrupt pin.

Copyright © 2018 Marvell

Table 7: Clock/Configuration/Reset/I/O

48-QFN Pin #	Pin Name	Pin Type	Description
11	CONFIG	I	Hardware Configuration.
6	CLK125	O	125 MHz Clock Output synchronized with the 25 MHz reference clock
29	XTAL_IN	I	Reference Clock. 25 MHz ± 50 ppm tolerance crystal reference or oscillator input. **NOTE:** The XTAL_IN pin is not 2.5V/3.3V tolerant. Refer to 'Oscillator level shifting' application note to convert a 2.5V/3.3V clock source to 1.8V clock.
28	XTAL_OUT	O	Reference Clock. 25 MHz ± 50 ppm tolerance crystal reference. When the XTAL_OUT pin is not connected, it should be left floating.
12	RESETn	I	Hardware reset. Active low. 0 = Reset 1 = Normal operation

Table 8: Control and Reference

48-QFN Pin #	Pin Name	Pin Type	Description
25	RSET	I	Constant voltage reference. External 4.99 kΩ 1% resistor connection to VSS is required for this pin.

Table 9: Test

48-QFN Pin #	Pin Name	Pin Type	Description
26 27	HSDACN HSDACP	Analog O	Test Pins. These pins are used to bring out a differential TX_TCLK. Connect these pins with a 50Ω termination resistor to VSS for IEEE testing. If IEEE testing is not important, these pins may be left floating.

Table 10: Power, Ground & Internal Regulators

48-QFN Pin #	Pin Name	Pin Type	Description
30	AVDDC18	Power	Analog supply - 1.8V[1]. AVDDC18 can be supplied externally with 1.8V, or via the 1.8V internal regulator.
15 22	AVDD18	Power	Analog supply - 1.8V. AVDD18 can be supplied externally with 1.8V, or via the 1.8V internal regulator.
16 21	AVDD33	Power	Analog Supply - 3.3V.
31	REG_IN	Power	Analog Supply for the internal regulator – 3.3V. If the internal regulator is not used, this pin must be left open – No connect. **NOTE:** For further details on pin connections, refer to the Section 2.21, Regulators and Power Supplies, on page 68. **NOTE:** Ensure that these pins are left floating when the internal regulator is not used. Connecting these two pins to either another power supply or ground will damage the device.

Table 10: Power, Ground & Internal Regulators (Continued)

48-QFN Pin #	Pin Name	Pin Type	Description
32 35	REGCAP1 REGCAP2		Capacitor terminal pins for the internal regulator. Connect a 220 nF ± 10% ceramic capacitor between REGCAP1 and REGCAP2 on the board and place it close to the device. If the internal regulator is not used, these pins must be left open (no connect). Ensure that these pins are left floating when the internal regulator is not used. Connecting these two pins to either another power supply or ground will permanently damage the device.
33	AVDD18_OUT	Power	Regulator output - 1.8V. If the internal regulator is used, this pin must be connected to 1.8V power plane that connected to AVDD18 and AVDDC18. If the external supply is used, this pin must be left open (no-connect).
34	DVDD_OUT	Power	Regulator output - 1.0V. If the internal regulator is used, this pin must be connected to 1.0V power plane that connected to DVDD. If the external supply is used, this pin must be left open (no-connect).
7 43 46	VDDO	Power	3.3V or 2.5V or 1.8V[2] digital I/O supply[3]. VDDO must be supplied externally if 2.5V or 3.3V is desired. For VDDO 1.8V operation the 1.8V regulator output can be used.
3 36	DVDD	Power	Digital core supply - 1.0V. DVDD can be supplied externally with 1.0V or via the 1.0V internal regulator.
Epad	VSS	GND	Ground to device. The 48-pin QFN package has an exposed die pad (E-PAD) at its base. This E-PAD must be soldered to VSS. Refer to the package mechanical drawings for the exact location and dimensions of the EPAD.

1. AVDDC18 supplies the XTAL_IN and XTAL_OUT pins.
2. For 1.8V VDDO operations, refer to the Part Ordering section for the ordering information.
3. VDDO supplies the MDC, MDIO, RESETn, LED[2:0], CONFIG, CLK125, and the RGMII pins.

Copyright © 2018 Marvell

1.1.2 88E1512 56-Pin QFN Package Pinout

The 88E1512 device is a 10/100/1000BASE-T Gigabit Ethernet transceiver.

Figure 6: 88E1512 Device 56-Pin QFN Package (Top View)

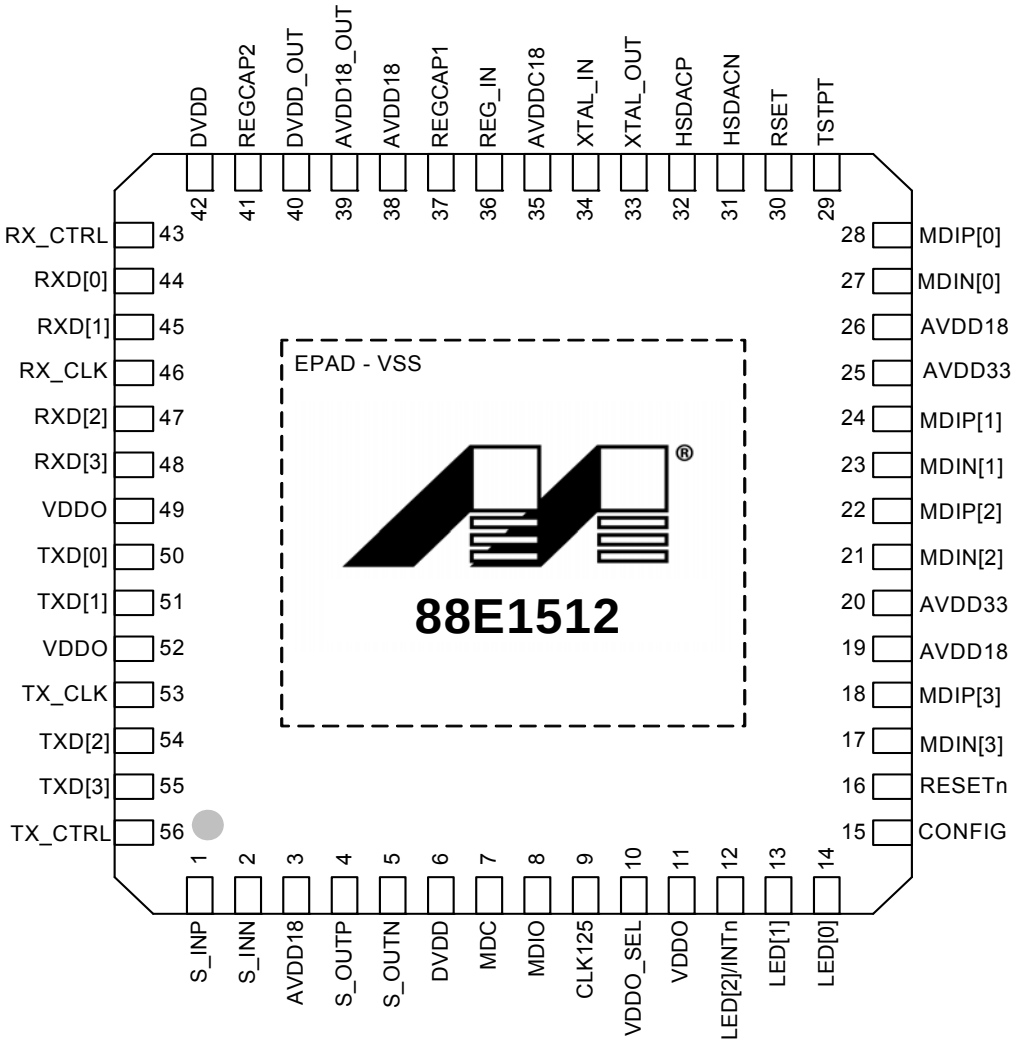

Table 11: Media Dependent Interface

56-QFN Pin #	Pin Name	Pin Type	Description
27 28	MDIN[0] MDIP[0]	I/O	Media Dependent Interface[0]. In 1000BASE-T mode in MDI configuration, MDIN/P[0] correspond to BI_DA±. In MDIX configuration, MDIN/P[0] correspond to BI_DB±. In 100BASE-TX and 10BASE-T modes in MDI configuration, MDIN/P[0] are used for the transmit pair. In MDIX configuration, MDIN/P[0] are used for the receive pair. **NOTE:** Unused MDI pins must be left floating. The device contains an internal 100Ω resistor between the MDIP/N[0] pins.
23 24	MDIN[1] MDIP[1]	I/O	Media Dependent Interface[1]. In 1000BASE-T mode in MDI configuration, MDIN/P[1] correspond to BI_DB±. In MDIX configuration, MDIN/P[1] correspond to BI_DA±. In 100BASE-TX and 10BASE-T modes in MDI configuration, MDIN/P[1] are used for the receive pair. In MDIX configuration, MDIN/P[1] are used for the transmit pair. **NOTE:** Unused MDI pins must be left floating. The device contains an internal 100Ω resistor between the MDIP/N[1] pins.
21 22	MDIN[2] MDIP[2]	I/O	Media Dependent Interface[2]. In 1000BASE-T mode in MDI configuration, MDIN/P[2] correspond to BI_DC±. In MDIX configuration, MDIN/P[2] corresponds to BI_DD±. In 100BASE-TX and 10BASE-T modes, MDIN/P[2] are not used. **NOTE:** Unused MDI pins must be left floating. The device contains an internal 100Ω resistor between the MDIP/N[2] pins.
17 18	MDIN[3] MDIP[3]	I/O	Media Dependent Interface[3]. In 1000BASE-T mode in MDI configuration, MDIN/P[3] correspond to BI_DD±. In MDIX configuration, MDIN/P[3] correspond to BI_DC±. In 100BASE-TX and 10BASE-T modes, MDIN/P[3] are not used. **NOTE:** Unused MDI pins must be left floating. The device contains an internal 100Ω resistor between the MDIP/N[3] pins.

Copyright © 2018 Marvell

Table 12: RGMII

56-QFN Pin #	Pin Name	Pin Type	Description
53	TX_CLK	I	RGMII Transmit Clock provides a 125 MHz, 25 MHz, or 2.5 MHz reference clock with ± 50 ppm tolerance depending on speed.
56	TX_CTRL	I	RGMII Transmit Control. TX_EN is presented on the rising edge of TX_CLK. A logical derivative of TX_EN and TX_ER is presented on the falling edge of TX_CLK.
55 54 51 50	TXD[3] TXD[2] TXD[1] TXD[0]	I	RGMII Transmit Data. TXD[3:0] run at double data rate with bits [3:0] of each byte to be transmitted on the rising edge of TX_CLK, and bits [7:4] presented on the falling edge of TX_CLK. In 10/100BASE-T modes, the transmit data nibble is presented on TXD[3:0] on the rising edge of TX_CLK.
46	RX_CLK	O	RGMII Receive Clock provides a 125 MHz, 25 MHz, or 2.5 MHz reference clock with ± 50 ppm tolerance derived from the received data stream depending on speed.
43	RX_CTRL	O	RGMII Receive Control. RX_DV is presented on the rising edge of RX_CLK. A logical derivative of RX_DV and RX_ER is presented on the falling edge of RX_CLK.
48 47 45 44	RXD[3] RXD[2] RXD[1] RXD[0]	O	RGMII Receive Data. RXD[3:0] run at double data rate with bits [3:0] of each byte received on the rising edge of RX_CLK, and bits [7:4] presented on the falling edge of RX_CLK. In 10/100BASE-T modes, the receive data nibble is presented on RXD[3:0] on the rising edge of RX_CLK.

Table 13: Management Interface and Interrupt

56-QFN Pin #	Pin Name	Pin Type	Description
7	MDC	I	MDC is the management data clock reference for the serial management interface. A continuous clock stream is not expected. The maximum frequency supported is 12 MHz.
8	MDIO	I/O	MDIO is the management data. MDIO transfers management data in and out of the device synchronously to MDC. This pin requires a pull-up resistor in a range from 1.5 kΩ to 10 kΩ.

Table 14: LED Interface

56-QFN Pin #	Pin Name	Pin Type	Description
14	LED[0]	O	LED output.
13	LED[1]	I/O	LED output
12	LED[2]/INTn	O	LED/Interrupt outputs. LED[2] pin also functions as an active low interrupt pin.

Table 15: Clock/Configuration/Reset/I/O

56-QFN Pin #	Pin Name	Pin Type	Description
15	CONFIG	I	Hardware Configuration.
9	CLK125	O	125 MHz Clock Output synchronized with the 25 MHz reference clock
34	XTAL_IN	I	Reference Clock. 25 MHz ± 50 ppm tolerance crystal reference or oscillator input. **NOTE:** The XTAL_IN pin is not 2.5V/3.3V tolerant. Refer to 'Oscillator level shifting' application note to convert a 2.5V/3.3V clock source to 1.8V clock.
33	XTAL_OUT	O	Reference Clock. 25 MHz ± 50 ppm tolerance crystal reference. When the XTAL_OUT pin is not connected, it should be left floating.
16	RESETn	I	Hardware reset. Active low. 0 = Reset 1 = Normal operation

Table 16: SGMII I/Os

56-QFN Pin #	Pin Name	Pin Type	Description
2 1	S_INN S_INP	I	SGMII Receive Data. 1.25 GBaud input - Positive and Negative.
5 4	S_OUTN S_OUTP	O	SGMII Transmit Data. 1.25 GBaud output - Positive and Negative.

Table 17: Control and Reference

56-QFN Pin #	Pin Name	Pin Type	Description
30	RSET	I	Constant voltage reference. External 4.99 kΩ 1% resistor connection to VSS is required for this pin.

Table 18: Test

56-QFN Pin #	Pin Name	Pin Type	Description
31 32	HSDACN HSDACP	Analog O	Test Pins. These pins are used to bring out a differential TX_TCLK. Connect these pins with a 50Ω termination resistor to VSS for IEEE testing. If IEEE testing are not important, these pins may be left floating.
29	TSTPT	O	DC Test Point. The TSTPT pin should be left floating.

Copyright © 2018 Marvell

Table 19: Power, Ground, and Internal Regulators

56-QFN Pin #	Pin Name	Pin Type	Description
35	AVDDC18	Power	Analog supply - 1.8V[1]. AVDDC18 can be supplied externally with 1.8V, or via the 1.8V internal regulator.
3 19 26 38	AVDD18	Power	Analog supply - 1.8V. AVDD18 can be supplied externally with 1.8V, or via the 1.8V internal regulator.
20 25	AVDD33	Power	Analog Supply - 3.3V.
36	REG_IN	Power	Analog Supply for the internal regulator – 3.3V. If the internal regulator is not used, this pin must be left open – No connect. **NOTE:** For further details on pin connections, refer to the Section 2.21, Regulators and Power Supplies, on page 68. **NOTE:** Ensure that these pins are left floating when the internal regulator is not used. Connecting these two pins to either another power supply or ground will damage the device.
37 41	REGCAP1 REGCAP2		Capacitor terminal pins for the internal regulator. Connect a 220 nF ± 10% ceramic capacitor between REGCAP1 and REGCAP2 on the board and place it close to the device. If the internal regulator is not used, these pins must be left open (no connect). **NOTE:** Ensure that these pins are left floating when the internal regulator is not used. Connecting these two pins to either another power supply or ground will damage the device.
39	AVDD18_OUT	Power	Regulator output - 1.8V. If the internal regulator is used, this pin must be connected to 1.8V power plane that connected to AVDD18 and AVDDC18. If the external supply is used, this pin must be left open (no-connect).
40	DVDD_OUT	Power	Regulator output - 1.0V. If the internal regulator is used, this pin must be connected to 1.0V power plane that connected to DVDD. If the external supply is used, this pin must be left open (no-connect).
11 49 52	VDDO	Power	3.3V or 2.5V or 1.8V digital I/O supply[2]. See VDDO_SEL for further details. VDDO must be supplied externally when 3.3V or 2.5V is used. For 1.8V operation, the 1.8V regulator output can be used.
10	VDDO_SEL	Power	VDDO Voltage Control. For VDDO 2.5V/3.3V operation, VDDO_SEL must be tied to VSS. For VDDO 1.8V operation, VDDO_SEL must be tied to VDDO.
6 42	DVDD	Power	Digital core supply - 1.0V. DVDD can be supplied externally with 1.0V or via the 1.0V internal regulator.
EPAD	VSS	GND	Ground to device. The 56-pin QFN package has an exposed die pad (E-PAD) at its base. This EPAD must be soldered to VSS. Refer to the package mechanical drawings for the exact location and dimensions of the EPAD.

1. AVDDC18 supplies the XTAL_IN and XTAL_OUT pins.
2. VDDO supplies the MDC, MDIO, RESETn, LED[2:0], CONFIG, CLK125, VDDO_SEL, and the RGMII pins.

1.1.3 88E1514 56-Pin QFN Package Pinout

The 88E1514 device is a 10/100/1000BASE-T Gigabit Ethernet transceiver.

Figure 7: 88E1514 Device 56-Pin QFN Package (Top View)

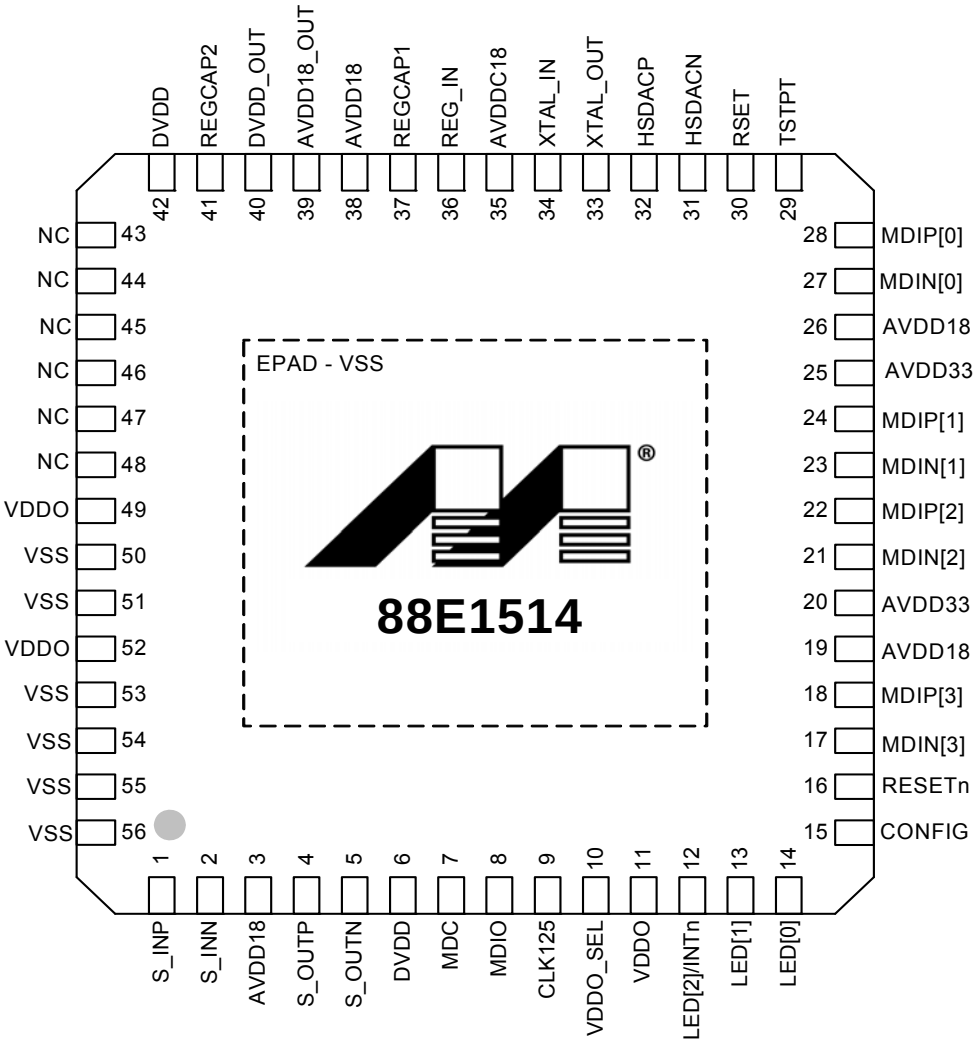

Copyright © 2018 Marvell

Table 20: Media Dependent Interface

56-QFN Pin #	Pin Name	Pin Type	Description
27 28	MDIN[0] MDIP[0]	I/O	Media Dependent Interface[0]. In 1000BASE-T mode in MDI configuration, MDIN/P[0] correspond to BI_DA±. In MDIX configuration, MDIN/P[0] correspond to BI_DB±. In 100BASE-TX and 10BASE-T modes in MDI configuration, MDIN/P[0] are used for the transmit pair. In MDIX configuration, MDIN/P[0] are used for the receive pair. **NOTE:** Unused MDI pins must be left floating. The device contains an internal 100Ω resistor between the MDIP/N[0] pins.
23 24	MDIN[1] MDIP[1]	I/O	Media Dependent Interface[1]. In 1000BASE-T mode in MDI configuration, MDIN/P[1] correspond to BI_DB±. In MDIX configuration, MDIN/P[1] correspond to BI_DA±. In 100BASE-TX and 10BASE-T modes in MDI configuration, MDIN/P[1] are used for the receive pair. In MDIX configuration, MDIN/P[1] are used for the transmit pair. **NOTE:** Unused MDI pins must be left floating. The device contains an internal 100Ω resistor between the MDIP/N[1] pins.
21 22	MDIN[2] MDIP[2]	I/O	Media Dependent Interface[2]. In 1000BASE-T mode in MDI configuration, MDIN/P[2] correspond to BI_DC±. In MDIX configuration, MDIN/P[2] corresponds to BI_DD±. In 100BASE-TX and 10BASE-T modes, MDIN/P[2] are not used. **NOTE:** Unused MDI pins must be left floating. The device contains an internal 100Ω resistor between the MDIP/N[2] pins.
17 18	MDIN[3] MDIP[3]	I/O	Media Dependent Interface[3]. In 1000BASE-T mode in MDI configuration, MDIN/P[3] correspond to BI_DD±. In MDIX configuration, MDIN/P[3] correspond to BI_DC±. In 100BASE-TX and 10BASE-T modes, MDIN/P[3] are not used. **NOTE:** Unused MDI pins must be left floating. The device contains an internal 100Ω resistor between the MDIP/N[3] pins.

Table 21: Management Interface and Interrupt

56-QFN Pin #	Pin Name	Pin Type	Description
7	MDC	I	MDC is the management data clock reference for the serial management interface. A continuous clock stream is not expected. The maximum frequency supported is 12 MHz.
8	MDIO	I/O	MDIO is the management data. MDIO transfers management data in and out of the device synchronously to MDC. This pin requires a pull-up resistor in a range from 1.5 kΩ to 10 kΩ.

Table 22: LED Interface

56-QFN Pin #	Pin Name	Pin Type	Description
14	LED[0]	O	LED output.
13	LED[1]	I/O	LED output
12	LED[2]/INTn	O	LED/Interrupt outputs. LED[2] pin also functions as an active low interrupt pin.

Table 23: Clock/Configuration/Reset/I/O

56-QFN Pin #	Pin Name	Pin Type	Description
15	CONFIG	I	Hardware Configuration.
9	CLK125	O	125 MHz Clock Output synchronized with the 25 MHz reference clock
34	XTAL_IN	I	Reference Clock. 25 MHz ± 50 ppm tolerance crystal reference or oscillator input. **NOTE:** The XTAL_IN pin is not 2.5V/3.3V tolerant. Refer to 'Oscillator level shifting' application note to convert a 2.5V/3.3V clock source to 1.8V clock.
33	XTAL_OUT	O	Reference Clock. 25 MHz ± 50 ppm tolerance crystal reference. When the XTAL_OUT pin is not connected, it should be left floating.
16	RESETn	I	Hardware reset. Active low. 0 = Reset 1 = Normal operation

Table 24: SGMII I/Os

56-QFN Pin #	Pin Name	Pin Type	Description
2 1	S_INN S_INP	I	SGMII Receive Data. 1.25 GBaud input - Positive and Negative.
5 4	S_OUTN S_OUTP	O	SGMII Transmit Data. 1.25 GBaud output - Positive and Negative.

Copyright © 2018 Marvell

Table 25: Control and Reference

56-QFN Pin #	Pin Name	Pin Type	Description
30	RSET	I	Constant voltage reference. External 4.99 kΩ 1% resistor connection to VSS is required for this pin.

Table 26: Test

56-QFN Pin #	Pin Name	Pin Type	Description
31 32	HSDACN HSDACP	Analog O	Test Pins. These pins are used to bring out a differential TX_TCLK. Connect these pins with a 50Ω termination resistor to VSS for IEEE testing g. If IEEE testing are not important, these pins may be left floating.
29	TSTPT	O	DC Test Point. The TSTPT pin should be left floating.

Table 27: Power, Ground, and Internal Regulators

56-QFN Pin #	Pin Name	Pin Type	Description
35	AVDDC18	Power	Analog supply - 1.8V[1]. AVDDC18 can be supplied externally with 1.8V, or via the 1.8V internal regulator.
3 19 26 38	AVDD18	Power	Analog supply - 1.8V. AVDD18 can be supplied externally with 1.8V, or via the 1.8V internal regulator.
20 25	AVDD33	Power	Analog Supply - 3.3V.
36	REG_IN	Power	Analog Supply for the internal regulator – 3.3V. If the internal regulator is not used, this pin must be left open – No connect. **NOTE:** For further details on pin connections, refer to the Section 2.21, Regulators and Power Supplies, on page 68. **NOTE:** Ensure that these pins are left floating when the internal regulator is not used. Connecting these two pins to either another power supply or ground will damage the device.
37 41	REGCAP1 REGCAP2		Capacitor terminal pins for the internal regulator. Connect a 220 nF ± 10% ceramic capacitor between REGCAP1 and REGCAP2 on the board and place it close to the device. If the internal regulator is not used, these pins must be left open (no connect). **NOTE:** Ensure that these pins are left floating when the internal regulator is not used. Connecting these two pins to either another power supply or ground will damage the device.
39	AVDD18_OUT	Power	Regulator output - 1.8V. If the internal regulator is used, this pin must be connected to 1.8V power plane that connected to AVDD18 and AVDDC18. If the external supply is used, this pin must be left open (no-connect).
40	DVDD_OUT	Power	Regulator output - 1.0V. If the internal regulator is used, this pin must be connected to 1.0V power plane that connected to DVDD. If the external supply is used, this pin must be left open (no-connect).
11 49 52	VDDO	Power	3.3V or 2.5V or 1.8V digital I/O supply[2]. See VDDO_SEL for further details. VDDO must be supplied externally when 3.3V or 2.5V is used. For 1.8V operation, the 1.8V regulator output can be used.

Table 27: Power, Ground, and Internal Regulators (Continued)

56-QFN Pin #	Pin Name	Pin Type	Description
10	VDDO_SEL	Power	VDDO Voltage Control. For VDDO 2.5V/3.3V operation, VDDO_SEL must be tied to VSS. For VDDO 1.8V operation, VDDO_SEL must be tied to VDDO.
6 42	DVDD	Power	Digital core supply - 1.0V. DVDD can be supplied externally with 1.0V or via the 1.0V internal regulator.
50 51 53 54 55 56	VSS	GND	These pins must be tied to the GND.
EPAD	VSS	GND	Ground to device. The 56-pin QFN package has an exposed die pad (E-PAD) at its base. This EPAD must be soldered to VSS. Refer to the package mechanical drawings for the exact location and dimensions of the EPAD.

1. AVDDC18 supplies the XTAL_IN and XTAL_OUT pins.
2. VDDO supplies the MDC, MDIO, RESETn, LED[2:0], CONFIG, CLK125, VDDO_SEL, and the RGMII pins.

Table 28: No Connect

56-QFN Pin #	Pin Name	Pin Type	Description
43 44 45 46 47 48	NC	--	These pins must be left floating.

Copyright © 2018 Marvell

1.2 Pin Assignment List

1.2.1 88E1510 48-Pin QFN Pin Assignment List - Alphabetical by Signal Name

Table 29: 88E1510 48-Pin QFN Pin Assignment List - Alphabetical by Signal Name

Pin #	Pin Name	Pin #	Pin Name
33	AVDD18_OUT	18	MDIP[2]
15	AVDD18	14	MDIP[3]
22	AVDD18	32	REGCAP1
30	AVDDC18	35	REGCAP2
16	AVDD33	31	REG_IN
21	AVDD33	40	RX_CLK
6	CLK125	37	RX_CTRL
11	CONFIG	12	RESETn
3	DVDD	25	RSET
36	DVDD	38	RXD[0]
34	DVDD_OUT	39	RXD[1]
26	HSDACN	41	RXD[2]
27	HSDACP	42	RXD[3]
10	LED[0]	47	TX_CLK
9	LED[1]	2	TX_CTRL
8	LED[2]/INTn	44	TXD[0]
4	MDC	45	TXD[1]
23	MDIN[0]	48	TXD[2]
19	MDIN[1]	1	TXD[3]
17	MDIN[2]	7	VDDO
13	MDIN[3]	43	VDDO
5	MDIO	46	VDDO
24	MDIP[0]	29	XTAL_IN
20	MDIP[1]	28	XTAL_OUT

1.2.2 88E1518 48-Pin QFN Pin Assignment List - Alphabetical by Signal Name

Table 30: 88E1518 48-Pin QFN Pin Assignment List - Alphabetical by Signal Name

Pin #	Pin Name	Pin #	Pin Name
33	AVDD18_OUT	18	MDIP[2]
15	AVDD18	14	MDIP[3]
22	AVDD18	32	REGCAP1
30	AVDDC18	35	REGCAP2
16	AVDD33	31	REG_IN
21	AVDD33	40	RX_CLK
6	CLK125	37	RX_CTRL
11	CONFIG	12	RESETn
3	DVDD	25	RSET
36	DVDD	38	RXD[0]
34	DVDD_OUT	39	RXD[1]
26	HSDACN	41	RXD[2]
27	HSDACP	42	RXD[3]
10	LED[0]	47	TX_CLK
9	LED[1]	2	TX_CTRL
8	LED[2]/INTn	44	TXD[0]
4	MDC	45	TXD[1]
23	MDIN[0]	48	TXD[2]
19	MDIN[1]	1	TXD[3]
17	MDIN[2]	7	VDDO
13	MDIN[3]	43	VDDO
5	MDIO	46	VDDO
24	MDIP[0]	29	XTAL_IN
20	MDIP[1]	28	XTAL_OUT

Copyright © 2018 Marvell

1.2.3 88E1512 56-Pin QFN Pin Assignment List - Alphabetical by Signal Name

Table 31: 88E1512 56-Pin QFN Pin Assignment List - Alphabetical by Signal Name

Pin #	Pin Name	Pin #	Pin Name
39	AVDD18_OUT	37	REGCAP1
3	AVDD18	41	REGCAP2
19	AVDD18	36	REG_IN
26	AVDD18	46	RX_CLK
38	AVDD18	43	RX_CTRL
35	AVDDC18	16	RESETn
20	AVDD33	30	RSET
25	AVDD33	44	RXD[0]
9	CLK125	45	RXD[1]
15	CONFIG	47	RXD[2]
6	DVDD	48	RXD[3]
40	DVDD_OUT	2	S_INN
42	DVDD	1	S_INP
31	HSDACN	5	S_OUTN
32	HSDACP	4	S_OUTP
14	LED[0]	29	TSTPT
13	LED[1]	53	TX_CLK
12	LED[2]/INTn	56	TX_CTRL
7	MDC	50	TXD[0]
27	MDIN[0]	51	TXD[1]
23	MDIN[1]	54	TXD[2]
21	MDIN[2]	55	TXD[3]
17	MDIN[3]	11	VDDO
8	MDIO	49	VDDO
28	MDIP[0]	52	VDDO
24	MDIP[1]	10	VDDO_SEL
22	MDIP[2]	34	XTAL_IN
18	MDIP[3]	33	XTAL_OUT

1.2.4 88E1514 56-Pin QFN Pin Assignment List - Alphabetical by Signal Name

Table 32: 88E1514 56-Pin QFN Pin Assignment List - Alphabetical by Signal Name

Pin #	Pin Name	Pin #	Pin Name
39	AVDD18_OUT	43	NC
3	AVDD18	44	NC
19	AVDD18	45	NC
26	AVDD18	46	NC
38	AVDD18	47	NC
35	AVDDC18	48	NC
20	AVDD33	16	RESETn
25	AVDD33	30	RSET
9	CLK125	37	REGCAP1
15	CONFIG	41	REGCAP2
6	DVDD	36	REG_IN
40	DVDD_OUT	2	S_INN
42	DVDD	1	S_INP
31	HSDACN	5	S_OUTN
32	HSDACP	4	S_OUTP
14	LED[0]	29	TSTPT
13	LED[1]	11	VDDO
12	LED[2]/INTn	49	VDDO
7	MDC	52	VDDO
27	MDIN[0]	10	VDDO_SEL
23	MDIN[1]	53	VSS
21	MDIN[2]	56	VSS
17	MDIN[3]	50	VSS
8	MDIO	51	VSS
28	MDIP[0]	54	VSS
24	MDIP[1]	55	VSS
22	MDIP[2]	34	XTAL_IN
18	MDIP[3]	33	XTAL_OUT

Copyright © 2018 Marvell

2 PHY Functional Specifications

The device is a single-port 10/100/1000 Gigabit Ethernet transceiver. Figure 8 shows the functional block diagram of the device.

Note See Product Overview, on page 3 for a list of features supported by the device.

Figure 8: Device Functional Block Diagram

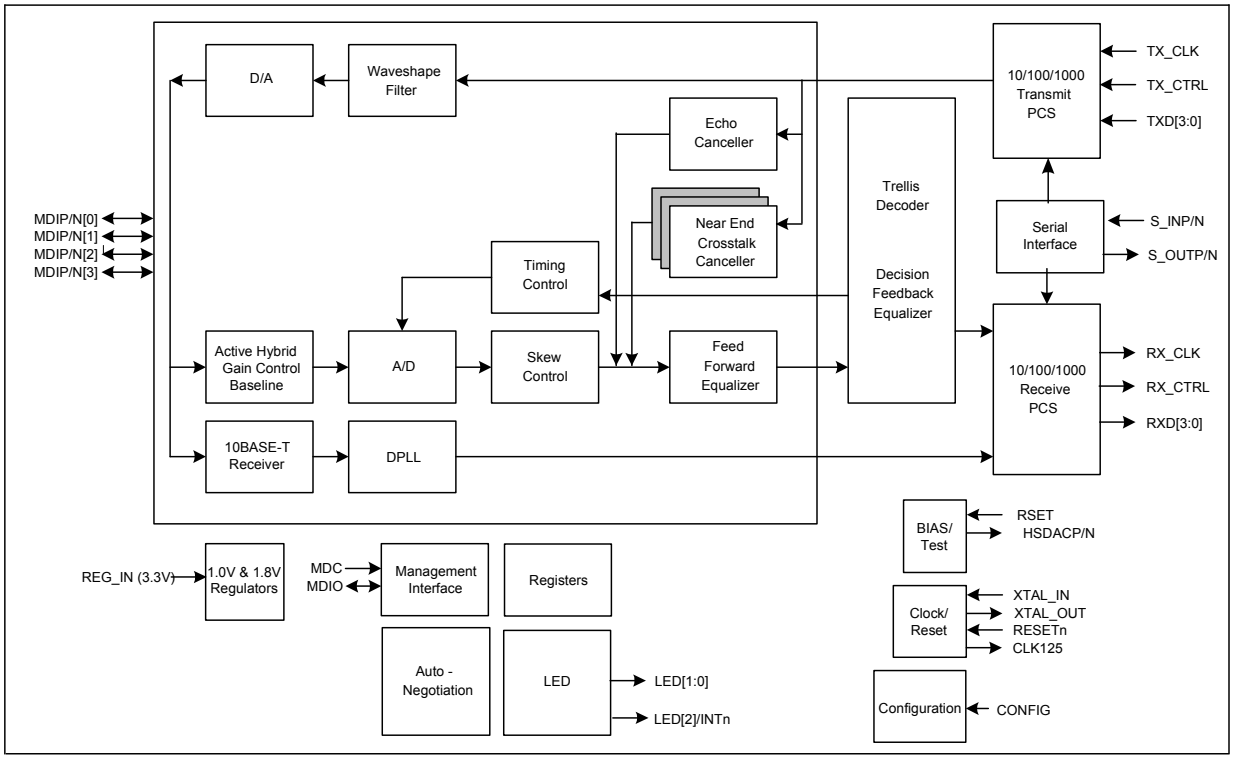

2.1 Modes of Operation and Major Interfaces

The device has three separate major electrical interfaces:

- MDI to Copper Cable (88E1510/88E1518/88E1512/88E1514 devices)
- SERDES/SGMII (88E1512/88E1514 device only)
- RGMII (88E1510/88E1518/88E1512 devices)

The MDI is always a media interface. The RGMII is always a system interface. The SGMII can either be a system interface, or a media interface. (The system interface is also known as MAC interface. It is typically the connection between the PHY and the MAC or the system ASIC). Block diagrams showing the different applications of the 88E1510/88E1518/88E1512/88E1514 devices are provided in Figure 9, Figure 10, and Figure 11.

Figure 9: 88E1512/88E1514 SGMII/SERDES System to Copper Media Interface Example

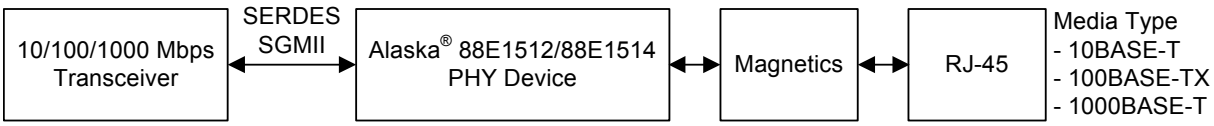

The 88E1512/88E1514 device can be used in media conversion applications that require a conversion from 1000BASE-T to 1000BASE-X provided the 1000BASE-X auto negotiation is disabled on both the upstream device and on the 88E1512/88E1514 device. The 88E1512/88E1514 device in this application must be configured to operate in SGMII to Copper(MODE[2:0]=001) for the conversion with the SGMII Auto-Negotiation disabled through Register 0_1.12=0.

When used as a system interface, the device implements the PHY SGMII Auto-Negotiation status (link, duplex, etc.) advertisements as specified in the Cisco SGMII specification. The system interface replicates the speed and duplex setting of the media interface.

When used as a Media interface, the device implements the MAC SGMII Auto-Negotiation function, which monitors PHY status advertisements.

For details of how SGMII Auto-Negotiation operates, see Section 2.8.3, SGMII Auto-Negotiation, on page 53 as well as the Cisco SGMII specification 1.8.

Figure 10: 88E1510/88E1518 RGMII System to Copper Interface Example

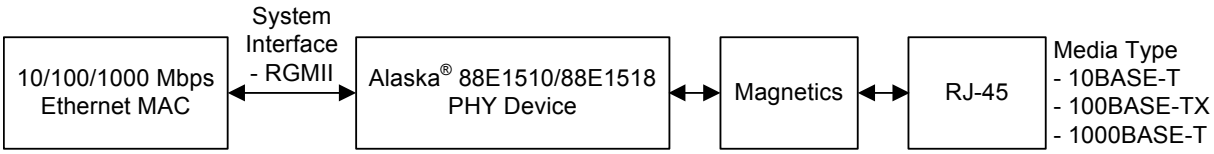

Figure 11: 88E1512 RGMII System to SERDES Interface Example

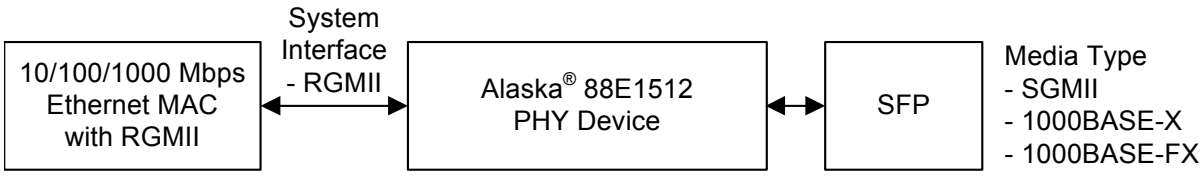

Copyright © 2018 Marvell

The 88E1512 device supports 5 modes of operation as shown in Table 33. For modes of operation supported by 88E1510, 88E1518, 88E1514, refer to Table 1.

The behavior of the 1.25 GHz SERDES interface is selected by setting the MODE[2:0] register in 20_18.2:0. The SERDES can operate in 100BASE-FX, 1000BASE-X, SGMII (System), and SGMII (Media).

Table 33: MODE[2:0] Select

MODE[2:0] Register 20_18.2:0	Description
000	RGMII (System mode) to Copper
001	SGMII (System mode) to Copper
010	RGMII (System mode) to 1000BASE-X
011	RGMII (System mode) to 100BASE-FX
100	RGMII (System mode) to SGMII (Media mode)
101	Reserved
110	Reserved
111	Reserved

20_18.2:0 defaults to 111 for 88E1512/88E1514. Therefore 20_18.2:0 must be programmed with the desired mode of operation.

20_18.2:0 defaults to 000 for 88E1510/88E1518.

When link is up, two of the three interfaces pass packets back and forth. The unused interface is powered down.

There is no need to power down the unused interface via registers 0_0.11 and 0_1.11. The unused interface will automatically power down when not needed.

2.2 Copper Media Interface

The copper interface consists of the MDIP/N[3:0] pins that connect to the physical media for 1000BASE-T, 100BASE-TX, and 10BASE-T modes of operation.

The device integrates MDI termination resistors. The IEEE 802.3 specification requires that both sides of a link have termination resistors to prevent reflections. Traditionally, these resistors and additional capacitors are placed on the board between a PHY device and the magnetics. The resistors have to be very accurate to meet the strict IEEE return loss requirements. Typically, ± 1% accuracy resistors are used on the board. These additional components between the PHY and the magnetics complicate board layout. Integrating the resistors has many advantages including component cost savings, better ICT yield, board reliability improvements, board area savings, improved layout, and signal integrity improvements.

2.2.1 Transmit Side Network Interface

2.2.1.1 Multi-mode TX Digital to Analog Converter

The device incorporates a multi-mode transmit DAC to generate filtered 4D PAM 5, MLT3, or Manchester coded symbols. The transmit DAC performs signal wave shaping to reduce EMI. The transmit DAC is designed for very low parasitic loading capacitances to improve the return loss requirement, which allows the use of low cost transformers.

2.2.1.2 Slew Rate Control and Waveshaping

In 1000BASE-T mode, partial response filtering and slew rate control are used to minimize high frequency EMI. In 100BASE-TX mode, slew rate control is used to minimize high frequency EMI. In 10BASE-T mode, the output waveform is pre-equalized via a digital filter.

2.2.2 Encoder

2.2.2.1 1000BASE-T

In 1000BASE-T mode, the transmit data bytes are scrambled to 9-bit symbols and encoded into 4D PAM5 symbols. Upon initialization, the initial scrambling seed is determined by the PHY address. This prevents multiple devices from outputting the same sequence during idle, which helps to reduce EMI.

2.2.2.2 100BASE-TX

In 100BASE-TX mode, the transmit data stream is 4B/5B encoded, serialized, and scrambled.

2.2.2.3 10BASE-T

In 10BASE-T mode, the transmit data is serialized and converted to Manchester encoding.

2.2.3 Receive Side Network Interface

2.2.3.1 Analog to Digital Converter

The device incorporates an advanced high speed ADC on each receive channel with greater resolution than the ADC used in the reference model of the IEEE 802.3ab standard committee. Higher resolution ADC results in better SNR, and therefore, lower error rates. Patented architectures and design techniques result in high differential and integral linearity, high power supply noise rejection, and low metastability error rate. The ADC samples the input signal at 125 MHz.

2.2.3.2 Active Hybrid

The device employs a sophisticated on-chip hybrid to substantially reduce the near-end echo, which is the super-imposed transmit signal on the receive signal. The hybrid minimizes the echo to reduce the precision requirement of the digital echo canceller. The on-chip hybrid allows both the transmitter and receiver to use the same transformer for coupling to the twisted pair cable, which reduces the cost of the overall system.

2.2.3.3 Echo Canceller

Residual echo not removed by the hybrid and echo due to patch cord impedance mismatch, patch panel discontinuity, and variations in cable impedance along the twisted pair cable result in drastic SNR degradation on the receive signal. The device employs a fully developed digital echo canceller to adjust for echo impairments from more than 100 meters of cable. The echo canceller is fully adaptive to compensate for the time varying nature of channel conditions.

2.2.3.4 NEXT Canceller

The 1000BASE-T physical layer uses all 4 pairs of wires to transmit data to reduce the baud rate requirement to only 125 MHz. This results in significant high frequency crosstalk between adjacent pairs of cable in the same bundle. The device employs 3 parallel NEXT cancellers on each receive channel to cancel any high frequency crosstalk induced by the adjacent 3 transmitters. A fully adaptive digital filter is used to compensate for the time varying nature of channel conditions.

Copyright © 2018 Marvell

2.2.3.5 Baseline Wander Canceller

Baseline wander is more problematic in the 1000BASE-T environment than in the traditional 100BASE-TX environment due to the DC baseline shift in both the transmit and receive signals. The device employs an advanced baseline wander cancellation circuit to automatically compensate for this DC shift. It minimizes the effect of DC baseline shift on the overall error rate.

2.2.3.6 Digital Adaptive Equalizer

The digital adaptive equalizer removes inter-symbol interference at the receiver. The digital adaptive equalizer takes unequalized signals from ADC output and uses a combination of feedforward equalizer (FFE) and decision feedback equalizer (DFE) for the best-optimized signal-to-noise (SNR) ratio.

2.2.3.7 Digital Phase Lock Loop

In 1000BASE-T mode, the slave transmitter must use the exact receive clock frequency it sees on the receive signal. Any slight long-term frequency phase jitter (frequency drift) on the receive signal must be tracked and duplicated by the slave transmitter; otherwise, the receivers of both the slave and master physical layer devices have difficulty canceling the echo and NEXT components. In the device, an advanced DPLL is used to recover and track the clock timing information from the receive signal. This DPLL has very low long-term phase jitter of its own, thereby maximizing the achievable SNR.

2.2.3.8 Link Monitor

The link monitor is responsible for determining if link is established with a link partner. In 10BASE-T mode, link monitor function is performed by detecting the presence of valid link pulses (NLPs) on the MDIP/N pins.

In 100BASE-TX and 1000BASE-T modes, link is established by scrambled idles.

If Force Link Good register 16_0.10 is set high, the link is forced to be good and the link monitor is bypassed for 100BASE-TX and 10BASE-T modes. In the 1000BASE-T mode, register 16_0.10 has no effect.

2.2.3.9 Signal Detection

In 1000BASE-T mode, signal detection is based on whether the local receiver has acquired lock to the incoming data stream.

In 100BASE-TX mode, the signal detection function is based on the receive signal energy detected on the MDIP/N pins that is continuously qualified by the squelch detect circuit, and the local receiver acquiring lock.

2.2.4 Decoder

2.2.4.1 1000BASE-T

In 1000BASE-T mode, the receive idle stream is analyzed so that the scrambler seed, the skew among the 4 pairs, the pair swap order, and the polarity of the pairs can be accounted for. Once calibrated, the 4D PAM 5 symbols are converted to 9-bit symbols that are then descrambled into 8-bit data values. If the descrambler loses lock for any reason, the link is brought down and calibration is restarted after the completion of Auto-Negotiation.

2.2.4.2 100BASE-TX

In 100BASE-TX mode, the receive data stream is recovered and converted to NRZ. The NRZ stream is descrambled and aligned to the symbol boundaries. The aligned data is then parallelized and 5B/4B decoded. The receiver does not attempt to decode the data stream unless the scrambler is locked. The descrambler “locks” to the *scrambler* state after detecting a sufficient number of consecutive idle code-groups. Once locked, the descrambler continuously monitors the data stream to make sure that it has not lost synchronization. The descrambler is always forced into the *unlocked* state when a link failure condition is detected, or when insufficient idle symbols are detected.

2.2.4.3 10BASE-T

In 10BASE-T mode, the recovered 10BASE-T signal is decoded from Manchester to NRZ, and then aligned. The alignment is necessary to insure that the start of frame delimiter (SFD) is aligned to the nibble boundary.

2.3 1.25 GHz SERDES Interface

The 1.25 GHz SERDES Interface can be configured as an SGMII to be hooked up to a MAC or as a 100BASE-FX/1000BASE-X/SGMII to be hooked up to the media.

2.3.1 Electrical Interface

The input and output buffers of the 1.25 GHz SERDES interface are internally terminated by 50Ω impedance. No external terminations are required. The output swing can be adjusted by programming register 26_1.2:0. The 1.25 GHz SERDES I/Os are Current Mode Logic (CML) buffers. CML I/Os can be used to connect to other components with PECL or LVDS I/Os. See the “Reference Design Schematics” and “Fiber Interface” application note for details.

Figure 12: CML I/Os

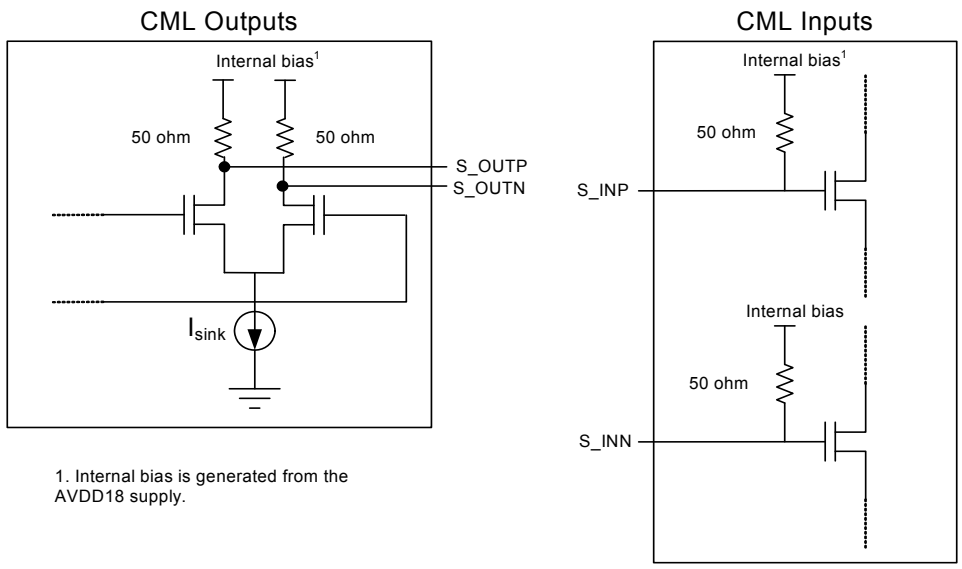

Copyright © 2018 Marvell

2.4 MAC Interfaces

2.4.1 SGMII

The 88E1512/88E1514 device supports the SGMII specification revision 1.8, except for the carrier extension block that has to be carried out in software. This interface supports 10, 100 and 1000 Mbps modes of operation.

2.4.1.1 SGMII Speed and Link

When the SGMII MAC interface is used, the media interface can only be copper. The operational speed of the SGMII MAC interface is determined according to Table 34 media interface status and/or loopback mode.

Table 34: SGMII (System Interface) Operational Speed

Link Status or Media Interface Status	SGMII (MAC Interface) Speed
No Link	Determined by speed setting of Register 21_ 2.6,13
MAC Loopback	Determined by speed setting of Register 21_2.6, 13
1000BASE-T at 1000 Mbps	1000 Mbps
100BASE-TX at 100 Mbps	100 Mbps
10BASE-T at 10 Mbps	10 Mbps

Two registers are available to determine whether the SGMII achieved link and sync. Status Register 17_1.5 indicates that the SERDES locked onto the incoming KDKDKD… sequence. Register 17_ 1.10 indicates whether link is established on the SERDES. If SGMII Auto-Negotiation is disabled, register 17_1.10 has the same meaning as register 17_1.5. If SGMII Auto-Negotiation is enabled, then register 17_1.10 indicates whether SGMII Auto-Negotiation successfully established link.

2.4.1.2 SGMII TRR Blocking

When the SGMII receives a packet with odd number of bytes, a single symbol of carrier extension will be passed on and transmitted onto 1000BASE-T. This carrier extension may cause problems with full-duplex MACs that incorrectly handle the carrier extension symbols. When register 16_1.13 is set to 1, all carrier extend and carrier extend with error symbols received by the SGMII will be converted to idle symbols when operating in full-duplex. Carrier extend and carrier extend with error symbols will not be blocked when operating in half-duplex, or if register 16_1.13 is set to 0. Note that symbol errors will continue to be propagated regardless of the setting of register 16_1.13.

2.4.1.3 False SERDES Link Up Prevention

The SERDES interface can operate in 1000BASE-X mode where an unconnected optical receiver can sometimes send full swing noise into the PHY. This random noise will look like a real signal and falsely cause the 1000BASE-X PCS to link up.

A noise filtering state machine can be enabled to reduce the probability of false link up. When the state machine is enabled it will cause a small delay in link up time. 1000BASE-X noise filtering is enabled through the register below.

Table 35: Fiber Noise Filtering

Register	Function	Setting	Mode	HW Rst	SW Rst
26_1.14	1000BASE-X Noise Filtering	1 = Enable 0 = Disable	R/W	0	Retain

2.4.2 RGMII

The device supports the RGMII specification (Version 1.2a, 9/22/2000, version 2.0, 04/2002). Four RGMII timing modes, with different receive clock to data timing and transmit clock to data timing, can be programmed by setting 21_2.4 and 21_2.5 described in Register 21_2.5. For timing details, see Section 4.10.2, RGMII Delay Timing for Different RGMII Modes, on page 136. Both Tx and Rx delays are enabled by default. Depending on the delay settings in the MAC, these delays may have to be modified.

Table 36: RGMII Signal Mapping

Device Pin Name	RGMII Spec Pin Name	Description
TX_CLK	TXC	125 MHz, 25 MHz, or 2.5 MHz transmit clock with ±50 ppm tolerance based on the selected speed.
TX_CTRL	TX_CTL	Transmit Control Signals. TX_EN is encoded on the rising edge of TX_CLK, TX_ER XORed with TX_EN is encoded on the falling edge of TX_CLK.
TXD[3:0]	TD[3:0]	Transmit Data. In 1000BASE-T mode, TXD[3:0] are presented on both edges of TX_CLK. In 100BASE-TX and 10BASE-T modes, TXD[3:0] are presented on the rising edge of TX_CLK.
RX_CLK	RXC	125 MHz, 25 MHz, or 2.5 MHz receive clock derived from the received data stream and based on the selected speed.
RX_CTRL	RX_CTL	Receive Control Signals. RX_DV is encoded on the rising edge of RX_CLK, RX_ER XORed with RX_DV is encoded on the falling edge of RX_CLK.
RXD[3:0]	RD[3:0]	Receive Data. In 1000BASE-T mode, RXD[3:0] are presented on both edges of RX_CLK. In 100BASE-TX and 10BASE-T modes, RXD[3:0] are presented on the rising edge of RX_CLK.

Figure 13: RGMII Signal Diagram

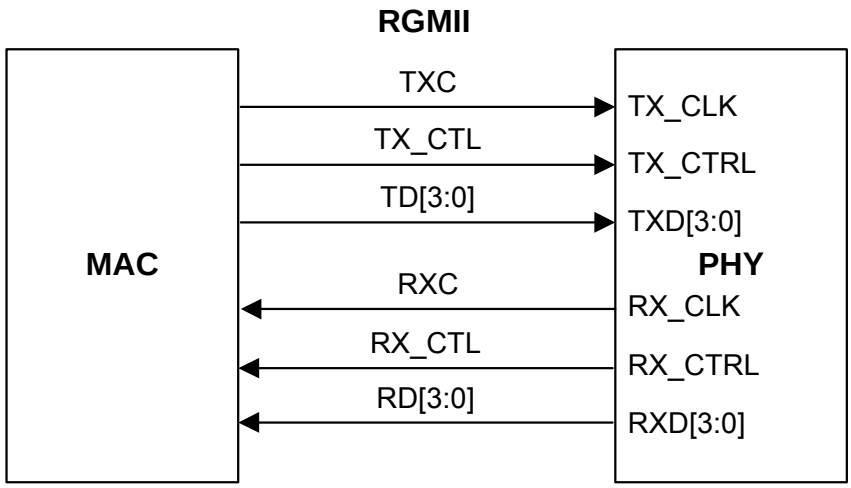

Copyright © 2018 Marvell

2.4.3 10/100 Mbps Functionality

The RGMII supports 10 Mbps and 100 Mbps operation by reducing the clock-rate to 2.5 MHz and 25 MHz respectively as shown in Table 36 on page 44.

During packet reception, RX_CLK may be stretched on either the positive or negative pulse to accommodate the transition from the free running clock to a data synchronous clock domain. When the speed of the PHY changes, a similar stretching of the positive or negative pulse is allowed. No glitching of the clocks is allowed during speed transitions.

The MAC must hold TX_CTRL (TX_CTL) low until the MAC has ensured that TX_CTRL (TX_CTL) is operating at the same speed as the PHY.

2.4.4 TX_ER and RX_ER Coding

See the RGMII Specifications for definitions of TX_ER, RX_ER, and in band status coding.

In RGMII mode, Register 21_2.3 is the register bit used to block carrier extension.

2.5 Loopback

The device implements various different loopback paths.

2.5.1 System Interface Loopback

The functionality, timing, and signal integrity of the System interface can be tested by placing the device in System interface loopback mode. This can be accomplished by setting register 0_0.14 = 1, if copper is the selected media, or 0_1.14 = 1, if fiber is the selected media. In loopback mode, the data received from the MAC is not transmitted out on the media interface. Instead, the data is looped back and sent to the MAC. During loopback, media link will be lost and packets will not be received.

If loopback is enabled while Auto-Negotiating, FLP Auto-Negotiation codes will be transmitted onto the copper media. If loopback is enabled in forced 10BASE-T mode, 10BASE-T idle link pulses will be transmitted on the copper side. If loopback is enabled in forced 100BASE-T mode, 100BASE-T idles will be transmitted on the copper side.

The speed of the SGMII or RGMII is determined by register 21_2.6, 13 during loopback. 21_2.2:6,13 is 00 = 10 Mbps, 01 = 100 Mbps, 10 = 1000 Mbps.

Figure 14: MAC Interface Loopback Diagram - Copper Media Interface

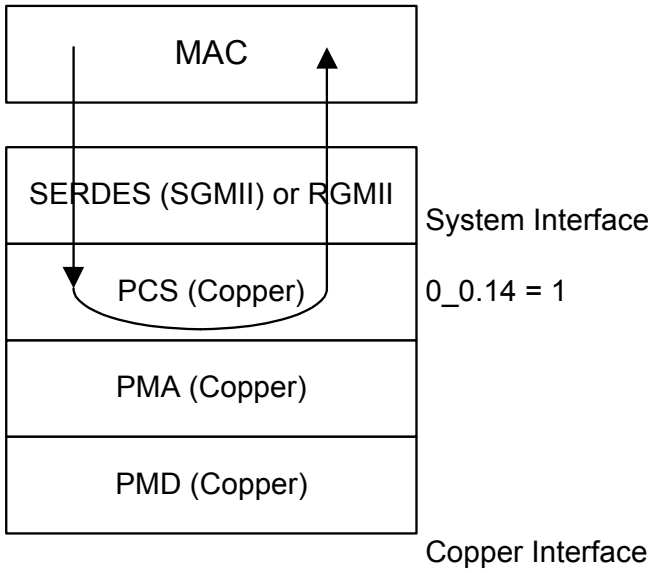

Figure 15: System Interface Loopback Diagram - Fiber Media Interface

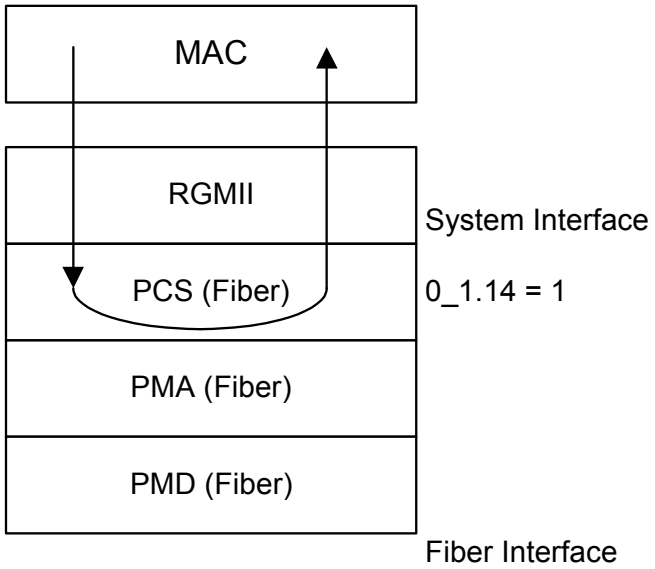

Copyright © 2018 Marvell

2.5.2 Line Loopback

Line loopback allows a link partner to send frames into the device to test the transmit and receive data path. Frames from a link partner into the PHY, before reaching the MAC interface pins, are looped back and sent out on the line. They are also sent to the MAC. The packets received from the MAC are ignored during line loopback. Refer to Figure 16. This allows the link partner to receive its own frames.

Before enabling the line loopback feature, the PHY must first establish link to another PHY link partner. If Auto-Negotiation is enabled, both link partners should advertise the same speed and full-duplex. If Auto-Negotiation is disabled, both link partners need to be forced to the same speed and full-duplex. Once link is established, the line loopback mode can be enabled.

Register 21_2.14 = 1 enables the line loopback on the copper interface.

Register 16_1.12 = 1 and 16_1.8 = 0 enables the line loopback of the 1000BASE-X/SGMII media interface.

Figure 16: Copper Line Loopback Data Path

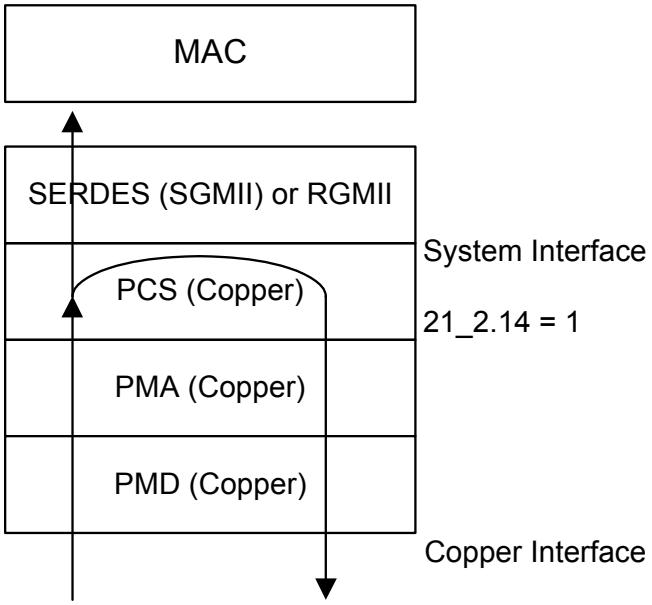

Figure 17: Fiber Line Loopback Data Path

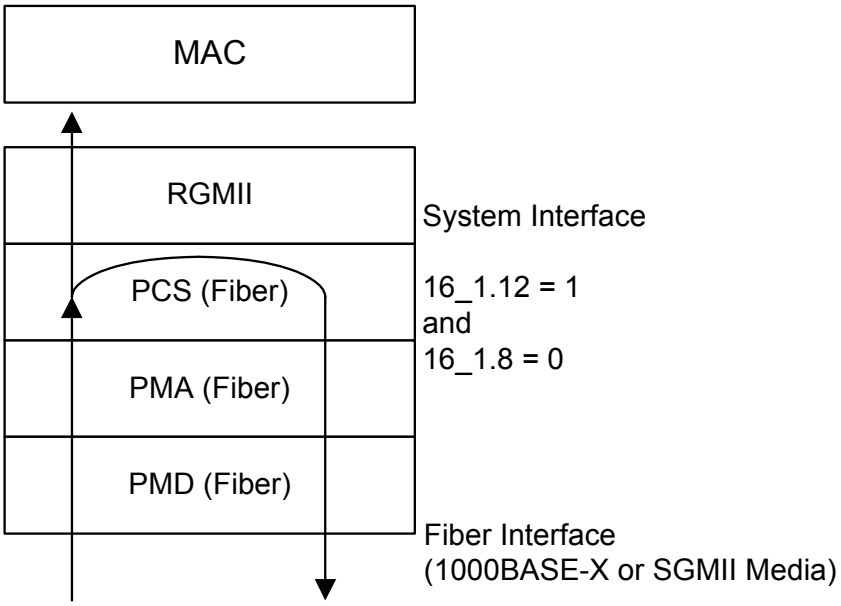

2.5.3 External Loopback

For production testing, an external loopback stub allows testing of the complete data path without the need of a link partner.

For 10BASE-T and 100BASE-TX modes, the loopback test requires no register writes. For 1000BASE-T mode, register 18_6.3 must be set to 1 to enable the external loopback. All copper modes require an external loopback stub.

The loopback stub consists of a plastic RJ-45 header, connecting RJ-45 pair 1,2 to pair 3,6 and connecting pair 4,5 to pair 7,8, as seen in Figure 18.

Figure 18: Loopback Stub (Top View with Tab up)

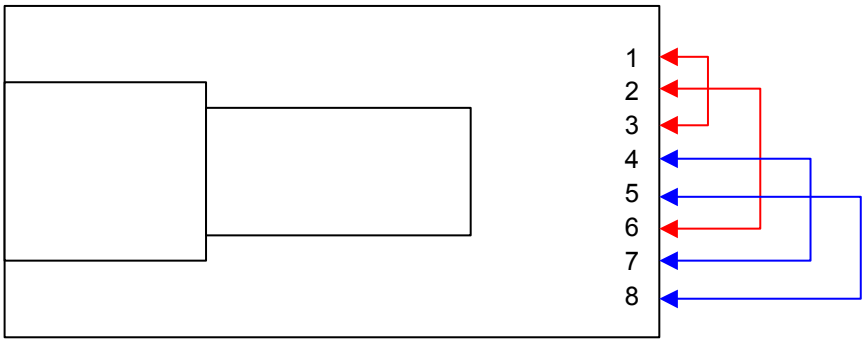

Copyright © 2018 Marvell

The external loopback test setup requires the presence of a MAC that will originate the frames to be sent out through the PHY. Instead of a normal RJ-45 cable, the loopback stubs allows the PHY to self-link at 10/100/1000 Mbps. It also allows the actual external loopback. See Figure 19. The MAC should see the same packets it sent looped back to it.

Figure 19: Test Setup for 10/100/1000 Mbps Modes using an External Loopback Stub

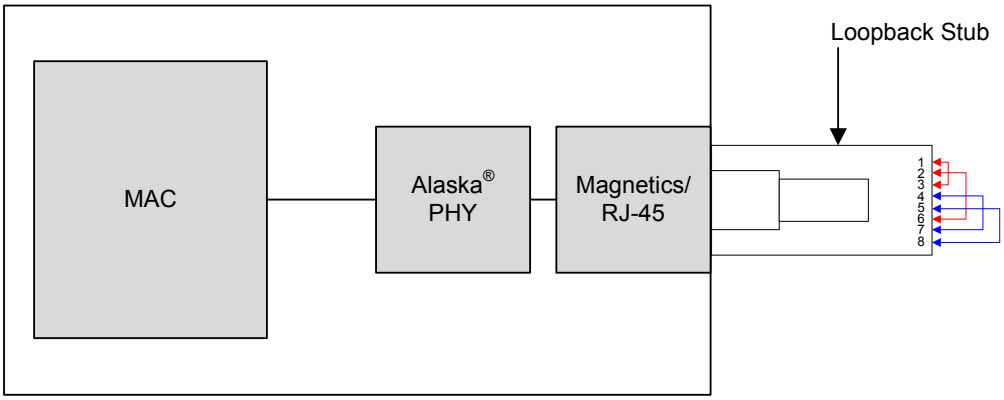

2.6 Resets

In addition to the hardware reset pin (RESETn) there are several software reset bits as summarized in Table 37.

The copper, fiber, and RGMII circuits are reset per port via register 0_0.15 and 0_1.15 respectively. A reset in one circuit does not directly affect another circuit.

Register 20_18.15 resets the mode control, port power management, and generator and checkers.

All the reset registers described so far self clear.

Table 37: Reset Control Bits

Reset Register	Register Effect	Functional Block
0_0.15	Software Reset for Registers in page 0, 2, 3, 5, 7	Copper
0_1.15	Software Reset for Registers in page 1	Fiber/SGMII
20_18.15	Software Reset for Registers in page 6 and 18	Generator/Checker/Mode

2.7 Power Management

The device supports several advanced power management modes that conserve power.

2.7.1 Low Power Modes

Four low power modes are supported in the device.

- IEEE 22.2.4.1.5 compliant power down
- Energy Detect (Mode 1)
- Energy Detect+™ (Mode 2)

IEEE 22.2.4.1.5 power down compliance allows for the PHY to be placed in a low-power consumption state by register control.

Energy Detect (Mode 1) allows the device to wake up when energy is detected on the wire.

Energy Detect+™ (Mode 2) is identical to Mode 1 with the additional capability to wake up a link partner. In Mode 2, the 10BASE-T link pulses are sent once every second while listening for energy on the line.

Details of each mode are described below.

2.7.1.1 IEEE Power Down Mode

The standard IEEE power down mode is entered by setting register 0_0.11 or 0_1.11. In this mode, the PHY does not respond to any system interface (i.e., RGMII/SGMII) signals except the MDC/MDIO. It also does not respond to any activity on the copper or fiber media.

In this power down mode, the PHY cannot wake up on its own by detecting activity on the media. It can only wake up by setting registers 0_0.11 and 16_0.2 = 0 for copper and 0_1.11 = 0 for Fiber.

Note that Register 0_0.11 or 16_0.2 may be set to 1 to power down the copper media.

As shown in Table 38, each power down control independently powers down its respective circuits. In general, it is not necessary to power down an unused interface. The PHY will automatically power down any unused circuit.

The automatic PHY power management can be overridden by setting the power down control bits. These bits have priority over the PHY power management in that the circuit can not be powered up by the power management when its associated power down bit is set to 1. When a circuit is power back up by setting the bit to 0, a software reset is also automatically sent to the corresponding circuit.

Table 38: Power Down Control Bits

Reset Register	Register Effect
0_0.11	Copper Power Down
16_0.2	Copper Power Down
0_1.11	Fiber/SGMII Power Down

2.7.1.2 Copper Energy Detect Modes

The device can be placed in energy detect power down modes by selecting either of the two energy detect modes. Both modes enable the PHY to wake up on its own by detecting activity on the CAT 5 cable. The status of the energy detect is reported in register 17_0.4 and the energy detect changes are reported in register 19_0.4. The energy detect modes only apply to the copper media. The energy detect modes will not work while Fiber/Copper Auto Select (2.5 “Fiber/Copper Auto-Selection” on page 45) is enabled. Normal 10/100/1000 Mbps operation can be entered by turning off energy detect mode by setting register 16_0.9:8 to 0x.

Energy Detect (Mode 1)

Energy Detect (Mode 1) is entered by setting register 16_0.9:8 to 10.

In Mode 1, only the signal detection circuitry and serial management interface are active. If the PHY detects energy on the line, it starts to Auto-Negotiate sending FLPs for 5 seconds. If at the end of 5 seconds the Auto-Negotiation is not completed, then the PHY stops sending FLPs and goes back to monitoring receive energy. If Auto-Negotiation is completed, then the PHY goes into normal 10/100/1000 Mbps operation. If during normal operation the link is lost, the PHY will re-start Auto-Negotiation. If no energy is detected after 5 seconds, the PHY goes back to monitoring receive energy.

Copyright © 2018 Marvell

Energy Detect +™ (Mode 2)

Energy Detect (Mode 2) is entered by setting register 16_0.9:8 to 11.

In Mode 2, the PHY sends out a single 10 Mbps NLP (Normal Link Pulse) every one second. Except for this difference, Mode 2 is identical to Mode 1 operation. If the device is in Mode 1, it cannot wake up a connected device; therefore, the connected device must be transmitting NLPs, or either device must be woken up through register access. If the device is in Mode 2, then it can wake a connected device.

Power Down Modes

When the PHY exits power down (register 0_0.11= 0 and 16_0.2=0) the active state will depend on whether the energy detect function is enabled (register 16_0.9:8 = 1x). If the energy detect function is enabled, the PHY will transition to the energy detect state first and will wake up only if there is a signal on the wire.

Table 39: Power Down Modes

Register 0_0.11	Register 16_0.2	Register 16_0.9:8	Behavior
1	x	xx	Power down
x	1	xx	Power down

2.7.2 RGMII/SGMII MAC Interface Power Down

In some applications, the MAC interface must run continuously regardless of the state of the media interface. Additional power will be required to keep the MAC interface running during low power states.

If absolute minimal power consumption is required during network interface power down mode or in the Energy Detect modes, then register 16_2.3 or 16_1.3 should be set to 0 to allow the MAC interface to power down.

In general 16_2.3 is used when the network interface is copper and 16_1.3 is used when the network interface is fiber. Note that for these settings to take effect a software reset must be issued.

2.8 Auto-Negotiation

The device supports three types of Auto-Negotiation.

- 10/100/1000BASE-T Copper Auto-Negotiation. (IEEE 802.3 Clauses 28 and 40)
- 1000BASE-X Fiber Auto-Negotiation (IEEE 802.3 Clause 37)
- SGMII Auto-Negotiation (Cisco specification)

Auto-Negotiation provides a mechanism for transferring information from the local station to the link partner to establish speed, duplex, and Master/Slave preference (in the case of Copper Auto-Negotiation) during a link session.

Auto-Negotiation is initiated upon any of the following conditions:

- Power up reset
- Hardware reset
- Software reset (Register 0_0.15 or 0_1.15)
- Restart Auto-Negotiation (Register 0_0.9 or 0_1.9)
- Transition from power down to power up (Register 0_0.11 or 0_1.11)
- The link goes down

The following sections describe each of the Auto-Negotiation modes in detail.

2.8.1 10/100/1000BASE-T Auto-Negotiation

The 10/100/1000BASE-T Auto-Negotiation (AN) is based on Clause 28 and 40 of the IEEE 802.3 specification. It is used to negotiate speed, duplex, and flow control over CAT5 UTP cable. Once Auto-Negotiation is initiated, the device determines whether or not the remote device has Auto-Negotiation capability. If so, the device and the remote device negotiate the speed and duplex with which to operate.

If the remote device does not have Auto-Negotiation capability, the device uses the parallel detect function to determine the speed of the remote device for 100BASE-TX and 10BASE-T modes. If link is established based on the parallel detect function, then it is required to establish link at half-duplex mode only. Refer to IEEE 802.3 clauses 28 and 40 for a full description of Auto-Negotiation.

After hardware reset, 10/100/1000BASE-T Auto-Negotiation can be enabled and disabled via Register 0_0.12. Auto MDI/MDIX and Auto-Negotiation may be disabled and enabled independently. When Auto-Negotiation is disabled, the speed and duplex can be set via registers 0_0.13, 0_0.6, and 0_0.8 respectively. When Auto-Negotiation is enabled the abilities that are advertised can be changed via registers 4_0 and 9_0.

Changes to registers 0_0.12, 0_0.13, 0_0.6 and 0_0.8 do not take effect unless one of the following takes place:

- Software reset (registers 0_0.15)
- Restart Auto-Negotiation (register 0_0.9)
- Transition from power down to power up (register 0_0.11)
- The copper link goes down

To enable or disable Auto-Negotiation, Register 0_0.12 should be changed simultaneously with either register 0_0.15 or 0_0.9. For example, to disable Auto-Negotiation and force 10BASE-T half-duplex mode, register 0_0 should be written with 0x8000.

Registers 4_0 and 9_0 are internally latched once every time the Auto-Negotiation enters the Ability Detect state in the arbitration state machine. Hence, a write into Register 4_0 or 9_0 has no effect once the device begins to transmit Fast Link Pulses (FLPs).This guarantees that sequences of FLPs transmitted are consistent with one another.

Register 7_0 is treated in a similar way as registers 4_0 and 9_0 during additional next page exchanges.

If 1000BASE-T mode is advertised, then the device automatically sends the appropriate next pages to advertise the capability and negotiate Master/Slave mode of operation. If the user does not wish to transmit additional next pages, then the next page bit (Register 4_0.15) can be set to zero, and the user needs to take no further action.

If next pages in addition to the ones required for 1000BASE-T are needed, then the user can set register 4_0.15 to one, and send and receive additional next pages via registers 7_0 and 8_0, respectively. The device stores the previous results from register 8 in internal registers, so that new next pages can overwrite register 8_0.

Note that 1000BASE-T next page exchanges are automatically handled by the device without user intervention, regardless of whether or not additional next pages are sent.

Once the device completes Auto-Negotiation, it updates the various status in registers 1_0, 5_0, 6_0, and 10_0. Speed, duplex, page received, and Auto-Negotiation completed status are also available in registers 17_0 and 19_0.

Refer to Register 17_0 and 19_0.

Copyright © 2018 Marvell

2.8.2 1000BASE-X Auto-Negotiation

1000BASE-X Auto-Negotiation is defined in Clause 37 of the IEEE 802.3 specification. It is used to Auto-Negotiate duplex and flow control over fiber cable. Registers 0_1, 4_1, 5_1, 6_1, and 15_1 are used to enable AN, advertise capabilities, determine link partner's capabilities, show AN status, and show the duplex mode of operation respectively.

Register 22.7:0 must be set to one to view the fiber Auto-Negotiation registers.

The device supports Next Page option for 1000BASE-X Auto-Negotiation. Register 7_1 of the fiber pages is used to transmit Next Pages, and register 8_1 of the fiber pages is used to store the received Next Pages. The Next Page exchange occurs with software intervention. The user must set Register 4_1.15 to enable fiber Next Page exchange. Each Next Page received in the registers should be read before a new Next Page to be transmitted is loaded in Register 7_1.

If the PHY enables 1000BASE-X Auto-Negotiation and the link partner does not, the link cannot link up. The device implements an Auto-Negotiation bypass mode. For more details, see Section 2.8.3.1, Serial Interface Auto-Negotiation Bypass Mode, on page 54.

2.8.3 SGMII Auto-Negotiation

SGMII is a de-facto standard designed by Cisco. SGMII uses 1000BASE-X coding to send data as well as Auto-Negotiation information between the PHY and the MAC. However, the contents of the SGMII Auto-Negotiation are different than the 1000BASE-X Auto-Negotiation. See the "Cisco SGMII Specification" and the "MAC Interfaces and Auto-Negotiation" application note for further details.

The device supports SGMII with and without Auto-Negotiation. Auto-Negotiation can be enabled or disabled by writing to Register 0_1.12 followed by a soft reset. If SGMII Auto-Negotiation is disabled, the MAC interface link, speed, and duplex status (determined by the media side) cannot be conveyed to the MAC from the PHY. The user must program the MAC with this information in some other way (e.g., by reading PHY registers for link, speed, and duplex status). However, the operational speed of the SGMII will follow the speed of the media (See Table 34 on page 43) regardless of whether the Auto-Negotiation is enabled or disabled.

In case of RGMII to SGMII mode of operation, the SGMII behaves as if it were the SGMII on the MAC side of the interface. When Auto-Negotiation is enabled, the SGMII Auto-Negotiation information like the speed, duplex, and link received from the PHY is used for determining the mode of operation. The RGMII will be adjusted accordingly when the SGMII Auto-Negotiation is completed.

2.8.3.1 Serial Interface Auto-Negotiation Bypass Mode

If the MAC or the PHY implements the Auto-Negotiation function and the other does not, two-way communication is not possible unless Auto-Negotiation is manually disabled and both sides are configured to work in the same operational modes. To solve this problem, the device implements the SGMII Auto-Negotiation Bypass Mode. When entering the state “Ability_Detect”, a bypass timer begins to count down from an initial value of approximately 200 ms. If the device receives idles during the 200 ms, the device will interpret that the other side is “alive” but cannot send configuration codes to perform Auto-Negotiation. After 200 ms, the state machine will move to a new state called “Bypass_Link_Up” in which the device assumes a link-up status and the operational mode is set to the value listed under the “Comments” column of Table 40. For further details, see Section 2.1, Modes of Operation and Major Interfaces.

Table 40: SGMII Auto-Negotiation modes

Reg. 0_1.12	Reg. 26_1.6	Comments
0	X	No Auto-Negotiation. User responsible for determining speed, link, and duplex status by reading PHY registers.
1	0	Normal SGMII Auto-Negotiation. Speed, link, and duplex status automatically communicated to the MAC during Auto-Negotiation.
1	1	MAC Auto-Negotiation enabled. Normal operation.
		MAC Auto-Negotiation disabled. After 200 ms the PHY will disable Auto-Negotiation and link based on idles.

2.9 CRC Error Counter and Frame Counter

The CRC counter and packet counters, normally found in MACs, are available in the device. The error counter and packet counter features are enabled through register writes and each counter is stored in eight register bits.

Register 18_18.2:0 controls which path the CRC checker and packet counter is counting.

If register 18_18.2:0 is set to 010 then the Copper receive path is checked.

If register 18_18.2:0 is set to 100 then the SGMII input path is checked.

If register 18_18.2:0 is set to 110 then the RGMII input path is checked.

2.9.1 Enabling the CRC Error Counter and Packet Counter

To enable the counters to count, set register 18_18.2:0 to a non-zero value.

To disable the counters, set register 18_18.2:0 to 000.

To read the CRC counter and packet counter, read register 17_18.

17_18.15:8 (Frame count is stored in these bits)

17_18.7:0 (CRC error count is stored in these bits)

The CRC counter and packet counter do not clear on a read command. To clear the counters, write Register 18_18.4 = 1. The register 18_18.4 is a self-clear bit. Disabling the counters by writing register 18_18.2:0 to 000 will also reset the counters.

2.10 Packet Generator

The device contains a very simple packet generator. Register 16_18.7:5 lists the device Packet Generator register details.

When 16_18.7:5 is set to 010 packets are generated on the copper transmit path.

Copyright © 2018 Marvell

When 16_18.7:5 is set to 100 packets are generated on the SGMII transmit path.

When 16_18.7:5 is set to 110 packets are generated on the RGMII transmit path.

Once enabled, fixed length packets of 64 or 1518 bytes (including CRC) will be transmitted separated by 12 bytes of IPG.The preamble length will be 8 bytes. The payload of the packet is either a fixed 5A, A5, 5A, A5 pattern or a pseudo random pattern. A correct IEEE CRC is appended to the end of the packet. An error packet can also be generated.

The registers are as follows:

16_18.7:5 Packet generation enable. 000 = Normal operation, Else = Enable internal packet generator.

16_18.2 Payload type. 0 = Pseudo random, 1 = Fixed 5A, A5, 5A, A5,...

16_18.1 Packet length. 0 = 64 bytes, 1 = 1518 bytes

16_18.0 Error packet. 0 = Good CRC, 1 = Symbol error and corrupt CRC.

16_18.15:8 Packet Burst Size. 0x00 = Continuous, 0x01 to 0xFF = Burst 1 to 255 packets.

If register 16_18.15:8 is set to a non-zero value, then register 16_18.7:5 will self clear once the required number of packets are generated. Note that if register 16_18.7:5 is manually set to 0 while packets are still bursting, the bursting will cease immediately once the current active packet finishes transmitting. The value in register 16_18.15:8 should not be changed while 16_18.7:5 is set to a non-zero value.

2.11 1.25G PRBS Generator and Checker

A PRBS generator and checker are available for use on the 1.25G SERDES. PRBS7,PRBS23, and PRBS31 are supported.

A 32-bit checker is implemented. Note that the reads are atomic. A read to the LSB will update the MSB register. The counters only clear when register 23_1.4 is set to 1. This bit self clears.

The checker and generator polarity can be inverted by setting registers 23_1.7 and 23_1.6 respectively.

Register 23_1.5 controls whether the checker has to lock before counting commences.

Table 41: 1.25 GHz SERDES PRBS Registers

Register	Function	Setting
23_1.7	Invert Checker Polarity	0 = Invert 1 = Normal
23_1.6	Invert Generator Polarity	0 = Invert 1 = Normal
23_1.5	PRBS Lock	0 = Counter Free Runs 1 = Do not start counting until PRBS locks first
23_1.4	Clear Counter	0 = Normal 1 = Clear Counter
23_1.3:2	Pattern Select	00 = PRBS 7 01 = PRBS 23 10 = PRBS 31 11 = Generate 1010101010...pattern
23_1.1	PRBS Checker Enable	0 = Disable 1 = Enable
23_1.0	PRBS Generator Enable	0 = Disable 1 = Enable

Table 41: 1.25 GHz SERDES PRBS Registers (Continued)

Register	Function	Setting
24_1.15:0	PRBS Error Count LSB	A read to this register freezes register 25_1. Cleared only when register 23_1.4 is set to 1.
25_1.15:0	PRBS Error Count MSB	This register does not update unless register 24_1 is read first. Cleared only when register 23_1.4 is set to 1.

2.12 MDI/MDIX Crossover

The device automatically determines whether or not it needs to cross over between pairs as shown in Table 42 so that an external crossover cable is not required. If the device interoperates with a device that cannot automatically correct for crossover, the device makes the necessary adjustment prior to commencing Auto-Negotiation. If the device interoperates with a device that implements MDI/MDIX crossover, a random algorithm as described in IEEE 802.3 clause 40.4.4 determines which device performs the crossover.

When the device interoperates with legacy 10BASE-T devices that do not implement Auto-Negotiation, the device follows the same algorithm as described above since link pulses are present. However, when interoperating with legacy 100BASE-TX devices that do not implement Auto-Negotiation (i.e. link pulses are not present), the device uses signal detect to determine whether or not to crossover.

The auto MDI/MDIX crossover function can be disabled via register 16_0.6:5.

The pin mapping in MDI and MDIX modes is shown in Table 42.

Table 42: Media Dependent Interface Pin Mapping

Pin	MDI			MDIX		
	1000BASE-T	100BASE-TX	10BASE-T	1000BASE-T	100BASE-TX	10BASE-T
MDIP/N[0]	BI_DA±	TX±	TX±	BI_DB±	RX±	RX±
MDIP/N[1]	BI_DB±	RX±	RX±	BI_DA±	TX±	TX±
MDIP/N[2]	BI_DC±	unused	unused	BI_DD±	unused	unused
MDIP/N[3]	BI_DD±	unused	unused	BI_DC±	unused	unused

Note Table 42 assumes no crossover on PCB.

The MDI/MDIX status is indicated by Register 17_0.6. This bit indicates whether the receive pairs (3,6) and (1,2) are crossed over. In 1000BASE-T operation, the device can correct for crossover between pairs (4,5) and (7,8) as shown in Table 42. However, this is not indicated by Register 17_0.6.

If 1000BASE-T link is established, pairs (1,2) and (3,6) crossover is reported in register 21_5.4, and pairs (4,5) and (7,8) crossover is reported in register 21_5.5.

2.13 Polarity Correction

The device automatically corrects polarity errors on the receive pairs in 1000BASE-T and 10BASE-T modes. In 100BASE-TX mode, the polarity does not matter.

Copyright © 2018 Marvell

In 1000BASE-T mode, receive polarity errors are automatically corrected based on the sequence of idle symbols. Once the descrambler is locked, the polarity is also locked on all pairs. The polarity becomes unlocked only when the receiver loses lock.

In 10BASE-T mode, polarity errors are corrected based on the detection of validly spaced link pulses. The detection begins during the MDI crossover detection phase and locks when the 10BASE-T link is up. The polarity becomes unlocked when link is down.

The polarity correction status is indicated by Register 17_0.1. This bit indicates whether the receive pair (3,6) is polarity reversed in MDI mode of operation. In MDIX mode of operation, the receive pair is (1,2) and Register 17_0.1 indicates whether this pair is polarity reversed. Although all pairs are corrected for receive polarity reversal, Register 17_0.1 only indicates polarity reversal on the pairs described above.

If 1000BASE-T link is established register 21_5.3:0 reports the polarity on all 4 pairs.

Polarity correction can be disabled by register write 16_0.1 = 1. Polarity will then be forced in normal 10BASE-T mode.

2.14 FLP Exchange Complete with No Link

Sometimes when link does not come up, it is difficult to determine whether the failure is due to the Auto-Negotiation Fast Link Pulse (FLP) not completing or from the 10/100/1000BASE-T link not being able to come up.

Register 19_0.3 is a sticky bit that gets set to 1 whenever the FLP exchange is completed but the link cannot be established for some reason. Once the bit is set, it can be cleared only by reading the register.

This bit will not be set if the FLP exchange is not completed, or if link is established.

2.15 Duplex Mismatch Indicator

When operating in half-duplex mode collisions should occur within the first 512 bit times. Collisions that are detected after this point can indicate an incorrect environment (too many repeaters in the system, too long cable) or it can indicate that the link partner thinks the link is a full-duplex link.

Registers 23_6.7:0, 23_6.15:8, 24_6.7:0, and 24_6.15:8 are 8 bit counters that count late collisions.

They will increment only when the PHY is in half-duplex mode and only applies to the copper interface. Each counter increments when a late collision is detected in a certain window as shown in Table 43. The four late collision counters will increment based on when the late collision starts. The counters clear on read. If the counter reaches FF it will not roll over.

Table 43: Late Collision Registers

Register	Function	Setting	Mode
23_6.15:8	Late Collision 97-128 bytes	This counter increments by 1 when the PHY is in half-duplex and a start of packet is received while the 96th to 128th bytes of the packet are transmitted.	RO, SC
		The measurement is done at the internal GMII. The counter will not roll over and will clear on read.	
23_6.7:0	Late Collision 65-96 bytes	This counter increments by 1 when the PHY is in half-duplex and a start of packet is received while the 65th to 96th bytes of the packet are transmitted.	RO, SC
		The measurement is done at the internal GMII. The counter will not roll over and will clear on read.	

Table 43: Late Collision Registers (Continued)

Register	Function	Setting	Mode
24_6.15:8	Late Collision >192 bytes	This counter increments by 1 when the PHY is in half-duplex and a start of packet is received after 192 bytes of the packet are transmitted.	RO, SC
		The measurement is done at the internal GMII. The counter will not roll over and will clear on read.	
24_6.7:0	Late Collision 129-192 bytes	This counter increments by 1 when the PHY is in half-duplex and a start of packet is received while the 129th to 192nd bytes of the packet are transmitted.	RO, SC
		The measurement is done at the internal GMII. The counter will not roll over and will clear on read.	
25_6.12:8	Late Collision Window Adjust	Number of bytes to advance in late collision window. 0 = start at 64th byte, 1 = start at 63rd byte, etc.	R/W

The real point of measurement for late collision should be done at the MAC and not at the PHY. In order to compensate for additional latency between the PHY and the MAC register 25_6.12:8 is used to move the window earlier. For example, if register 25_6.12.8 is set to 2 then the first window is 63 to 94 bytes, the second window is 95 to 129 bytes, etc. It is up to the user to program this register correctly since it is system dependent.

2.16 LED

The LED[2:0] pins can be used to drive LED pins. Registers 16_3, 17_3, and 18_3 control the operation of the LED pins. LED[1:0] are used to configure the PHY per Section 2.18.1, Hardware Configuration, on page 65. After the configuration is completed, LED[1:0] will operate per the setting in 16_3.7:0.

In general, 16_3.11:8 control the LED[2] pin, 16_3.7:4 control the LED[1] pin, and 16_3.3:0 control the LED[0] pin. These are referred to as single LED modes.

However, there are some LED modes where LED[1:0] operate as a unit. These are entered when 16_3.3:2 are set to 11. These are referred to as dual LED modes. In dual LED modes, register 16_3.7:4 have no meaning when 16_3.3:2 are set to 11.

Figure 20 shows the general chaining of function for the LEDs. The various functions are described in the following sections.

Figure 20: LED Chain

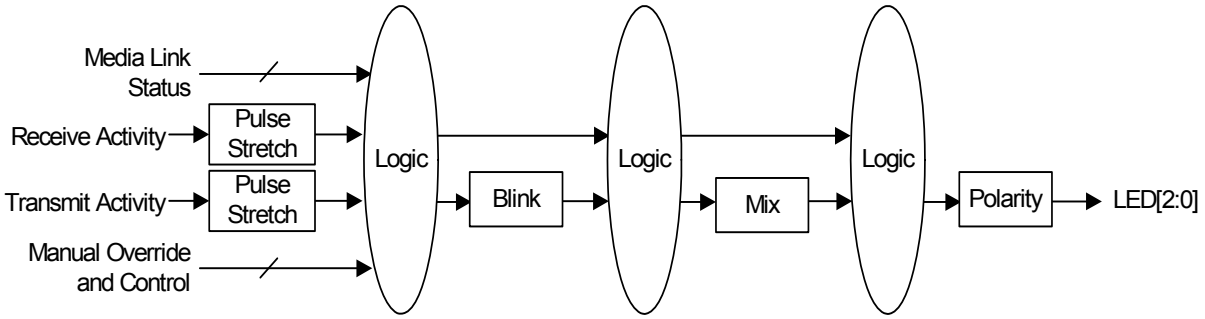

Copyright © 2018 Marvell

2.16.1 LED Polarity

There are a variety of ways to hook up the LEDs. Some examples are shown in Figure 21. In order to make things more flexible registers 17_3.5:4, 17_3.3:2, and 17_3.1:0 specify the output polarity for the LED[2:0]. The lower bit of each pair specifies the on (active) state of the LED, either high or low. The upper bit of each pair specifies whether the off state of the LED should be driven to the opposite level of the on state or Hi-Z.

Figure 21: Various LED Hookup Configurations

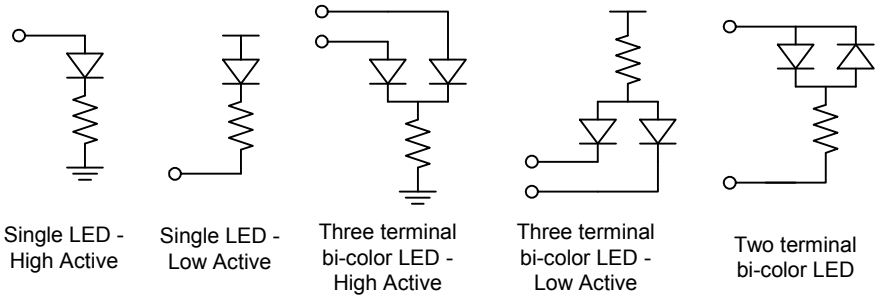

Table 44: LED Polarity

Register	Pin	Definition
17_3.5:4	LED[2] Polarity	00 = On - drive LED[2] low, Off - drive LED[2] high 01 = On - drive LED[2] high, Off - drive LED[2] low 10 = On - drive LED[2] low, Off - tristate LED[2] 11 = On - drive LED[2] high, Off - tristate LED[2]
17_3.3:2	LED[1] Polarity	00 = On - drive LED[1] low, Off - drive LED[1] high 01 = On - drive LED[1] high, Off - drive LED[1] low 10 = On - drive LED[1] low, Off - tristate LED[1] 11 = On - drive LED[1] high, Off - tristate LED[1]
17_3.1:0	LED[0] Polarity	00 = On - drive LED[0] low, Off - drive LED[0] high 01 = On - drive LED[0] high, Off - drive LED[0] low 10 = On - drive LED[0] low, Off - tristate LED[0] 11 = On - drive LED[0] high, Off - tristate LED[0]

2.16.2 Pulse Stretching and Blinking

Register 18_3.14:12 specify the pulse stretching duration of a particular activity. Only the transmit activity, receive activity, and (transmit or receive) activity are stretched. All other statuses are not stretched since they are static in nature and no stretching is required.

Some status will require blinking instead of a solid on. Register 18_3.10:8 specify the blink rate. Note that the pulse stretching is applied first and the blinking will reflect the duration of the stretched pulse.

The stretched/blinked output will then be mixed if needed (Section 2.16.3, Bi-Color LED Mixing, on page 60) and then inverted/Hi-Z according to the polarity described in Section 2.16.1, LED Polarity, on page 59.

Table 45: Pulse Stretching and Blinking

Register	Pin	Definition
18_3.14:12	Pulse stretch duration	000 = No pulse stretching 001 = 21 ms to 42 ms 010 = 42 ms to 84 ms 011 = 84 ms to 170 ms 100 = 170 ms to 340 ms 101 = 340 ms to 670 ms 110 = 670 ms to 1.3s 111 = 1.3s to 2.7s
18_3.10:8	Blink Rate	000 = 42 ms 001 = 84 ms 010 = 170 ms 011 = 340 ms 100 = 670 ms 101 to 111 = Reserved

2.16.3 Bi-Color LED Mixing

In the dual LED modes the mixing function allows the 2 colors of the LED to be mixed to form a third color. This is useful since the PHY is tri-speed and the three colors each represent one of the speeds. Register 17_3.15:12 control the amount to mix in the LED[1] pin. Register 17_3.11:8 control the amount to mix in the LED[0] pin. The mixing is determined by the percentage of time the LED is on during the active state. The percentage is selectable in 12.5% increments.

Note that there are two types of bi-color LEDs. There is the three terminal type and the 2 terminal type. For example, the third and fourth LED block from the left in Figure 21 illustrates three terminal types, and the one on the far right is the two terminal type. In the three terminal type both of the LEDs can be turned on at the same time. Hence the sum of the percentage specified by 17_3.15:12 and 17_3.11:8 can exceed 100%. However, in the two terminal type the sum should never exceed 100% since only one LED can be turned on at any given time.

Copyright © 2018 Marvell

The mixing only applies when register 16_3.3:0 are set to 11xx. There is no mixing in single LED modes.

Table 46: Bi-Color LED Mixing

Register	Function	Definition
17_3.15:12	LED[1] mix percentage	When using 2 terminal bi-color LEDs the mixing percentage should not be set greater than 50%. 0000 = 0% 0001 = 12.5% . . 0111 = 87.5% 1000 = 100% 1001 to 1111 = Reserved
17_3.11:8	LED[0] mix percentage	When using 2 terminal bi-color LEDs the mixing percentage should not be set greater than 50%. 0000 = 0% 0001 = 12.5%, . . . 0111 = 87.5% 1000 = 100% 1001 to 1111 = Reserved

2.16.4 Modes of Operation

The LED pins relay some modes of the PHY so that these modes can be displayed by the LEDs. Most of the single LED modes are self-explanatory from the register map of register 16_3. The non-obvious ones are covered in this section.

Table 47: Modes of Operation

Register	Pin	Definition
16_3.11:8	LED[2] Control	0000 = On - Link, Off - No Link 0001 = On - Link, Blink - Activity, Off - No Link 0010 = On- Full Duplex, Blink- Collision, Off- Half Duplex 0011 = On - Activity, Off - No Activity 0100 = Blink - Activity, Off - No Activity 0101 = On - Transmit, Off - No Transmit 0110 = On - 10/1000 Mbps Link, Off - Else 0111 = On - 10 Mbps Link, Off - Else 1000 = Force Off 1001 = Force On 1010 = Force Hi-Z 1011 = Force Blink 11xx = Reserved
16_3.7:4	LED[1] Control	If 16_3.3:2 is set to 11 then 16_3.7:4 has no effect 0000 = On- Receive, Off- No Receive 0001 = On - Link, Blink - Activity, Off - No Link 0010 = On - Link, Blink - Receive, Off - No Link 0011 = On - Activity, Off - No Activity 0100 = Blink - Activity, Off - No Activity 0101 = On- 100 Mbps Link/ Fiber Link 0110 = On - 100/1000 Mbps Link, Off - Else 0111 = On - 100 Mbps Link, Off - Else 1000 = Force Off 1001 = Force On 1010 = Force Hi-Z 1011 = Force Blink 11xx = Reserved
16_3.3:0	LED[0] Control	0000 = On - Link, Off - No Link 0001 = On - Link, Blink - Activity, Off - No Link 0010 = 3 blinks - 1000 Mbps 2 blinks - 100 Mbps 1 blink - 10 Mbps 0 blink - No Link 0011 = On - Activity, Off - No Activity 0100 = Blink - Activity, Off - No Activity 0101 = On - Transmit, Off - No Transmit 0110 = On - Copper Link, Off - Else 0111 = On - 1000 Mbps Link, Off - Else 1000 = Force Off 1001 = Force On 1010 = Force Hi-Z 1011 = Force Blink 1100 = MODE 1 (Dual LED mode) 1101 = MODE 2 (Dual LED mode) 1110 = MODE 3 (Dual LED mode) 1111 = MODE 4 (Dual LED mode)

Copyright © 2018 Marvell

2.16.4.1 Compound LED Modes

Compound LED modes are defined in Table 48.

Table 48: Compound LED Status

Compound Mode	Description
Activity	Transmit Activity OR Receive Activity
Link	10BASE-T link OR 100BASE-TX Link OR 1000BASE-T Link

2.16.4.2 Speed Blink

When 16_3.3:0 is set to 0010 the LED[0] pin takes on the following behavior.

LED[0] outputs the sequence shown in Table 49 depending on the status of the link. The sequence consists of 8 segments. If a 1000 Mbps link is established the LED[0] outputs 3 pulses, 100 Mbps 2 pulses, 10 Mbps 1 pulse, and no link 0 pulses. The sequence repeats over and over again indefinitely.

The odd numbered segment pulse duration is specified in 18_3.1:0. The even numbered pulse duration is specified in 18_3.3:2.

Table 49: Speed Blinking Sequence

Segment	10 Mbps	100 Mbps	1000 Mbps	No Link	Duration
1	On	On	On	Off	18_3.1:0
2	Off	Off	Off	Off	18_3.3:2
3	Off	On	On	Off	18_3.1:0
4	Off	Off	Off	Off	18_3.3:2
5	Off	Off	On	Off	18_3.1:0
6	Off	Off	Off	Off	18_3.3:2
7	Off	Off	Off	Off	18_3.1:0
8	Off	Off	Off	Off	18_3.3:2

Table 50: Speed Blink

Register	Pin	Definition
18_3.3:2	Pulse Period for even segments	00 = 84 ms 01 = 170 ms 10 = 340 ms 11 = 670 ms
18_3.1:0	Pulse Period for odd segments	00 = 84 ms 01 = 170 ms 10 = 340 ms 11 = 670 ms

2.16.4.3 Manual Override

When 16_3.11:10, 16_3.7:6, and 16_3.3:2 are set to 10 the LED[2:0] are manually forced. Registers 16_3.9:8, 16_3.5:4, and 16_3.1:0 then select whether the LEDs are to be on, off, Hi-Z, or blink.

If bi-color LEDs are used, the manual override will select only one of the 2 colors. In order to get the third color by mixing MODE 1 and MODE 2 should be used (Section 2.16.4.4, MODE 1, MODE 2, MODE 3, MODE 4, on page 64).

2.16.4.4 MODE 1, MODE 2, MODE 3, MODE 4

MODE 1 to 4 are dual LED modes. These are used to mix to a third color using bi-color LEDs.

When 16_3.3:0 is set to 11xx then one of the 4 modes are enabled.

MODE 1 – Solid mixed color. The mixing is discussed in Section 2.16.3, Bi-Color LED Mixing, on page 60.

MODE 2 – Blinking mixed color. The mixing is discussed in Section 2.16.3, Bi-Color LED Mixing, on page 60. The blinking is discussed in section Section 2.16.2, Pulse Stretching and Blinking, on page 59.

MODE 3 – Behavior according to Table 51.

MODE 4 – Behavior according to Table 52.

Note that MODE 4 is the same as MODE 3 except the 10 Mbps and 100 Mbps are reversed.

Table 51: MODE 3 Behavior

Status	LED[1]	LED[0]
1000 Mbps Link - No Activity	Off	Solid On
1000 Mbps Link - Activity	Off	Blink
100 Mbps Link - No Activity	Solid Mix	Solid Mix
100 Mbps Link - Activity	Blink Mix	Blink Mix
10 Mbps Link - No Activity	Solid On	Off
10 Mbps Link - Activity	Blink	Off
No link	Off	Off

Table 52: MODE 4 Behavior

Status	LED[1]	LED[0]
1000 Mbps Link - No Activity	Off	Solid On
1000 Mbps Link - Activity	Off	Blink
100 Mbps Link - No Activity	Solid On	Off
100 Mbps Link - Activity	Blink	Off
10 Mbps Link - No Activity	Solid Mix	Solid Mix
10 Mbps Link - Activity	Blink Mix	Blink Mix
No link	Off	Off

2.17 Interrupt

When Register 18_3.7 is set to 1, LED[2] outputs the interrupt. Register 18_3.11 selects the polarity of the interrupt signal when it is active, where 18_3.11 = 1 means it is active low and 18_3.11 = 0 means it is active high.

Registers 18_0 and 18_2 are the Interrupt Enable registers for the copper media.

Registers 19_0 and 19_2 are the Interrupt Status registers for the copper media.

Register 18_1 is the Interrupt Enable register and 19_1 is the Interrupt Status register for the fiber media.

Copyright © 2018 Marvell

There are force bits and polarity bits for fiber and copper media See Table 53 and Table 54.

Table 53: Copper

Register	Function
18_3.15	Force Interrupt
18_3.11	Set Polarity

Table 54: Fiber

Register	Function
26_1.15	Force Interrupt
16_1.2	Set Polarity

2.18 Configuring the 88E1510/88E1518/88E1512/88E1514 Device

The device can be configured two ways:

- Hardware configuration strap options (unmanaged applications)
- MDC/MDIO register writes (managed applications)

The VDDO_LEVEL configuration bit can be overwritten by software. PHYAD cannot be overwritten.

2.18.1 Hardware Configuration

After the deassertion of RESETn the device will be hardware configured.

The device is configured through the CONFIG pin. This pin is used to configure 2 bits. The 2-bit value is set depending on what is connected to the CONFIG pin soon after the deassertion of hardware reset. The 2-bit mapping is shown in Table 55.

Table 55: Two-Bit Mapping

Pin	Bit 1,0
VSS	00
LED[0]	01
LED[1]	10
LED[2]	Unused
VDDO	11

The 2 bits for the CONFIG pin is mapped as shown in Table 56.

Table 56: Configuration Mapping

Pin	CONFIG Bit1	CONFIG Bit 0	Value Assignment
CONFIG	0	0	PHYAD[0] = 0 VDDO_LEVEL = 3.3V/1.8V
CONFIG	1	1	PHYAD[0] = 1 VDDO_LEVEL = 3.3V/1.8V
CONFIG	1	0	PHYAD[0] = 0 VDDO_LEVEL = 2.5V/1.8V
CONFIG	0	1	PHYAD[0] = 1 VDDO_LEVEL = 2.5V/1.8V

Each bit in the configuration is defined as shown in Table 57.

Table 57: Configuration Definition

Bits	Definition	Register Affected
PHYAD[0][1]	PHY Address LSB (Bit 0)	None
VDDO_LEVEL	VDDO level at power up 1 = 2.5V/1.8V 0 = 3.3V/1.8V 3.3V/1.8V is assumed until this bit is initialized.	24_2.13

1. PHYAD[4:1] = 0000.

2.18.2 Software Configuration - Management Interface

The management interface provides access to the internal registers via the MDC and MDIO pins and is compliant with IEEE 802.3u Clause 22 and Clause 45 MDIO protocol. MDC is the management data clock input and, it can run from DC to a maximum rate of 12 MHz. At high MDIO fanouts the maximum rate may be decreased depending on the output loading. MDIO is the management data input/output and is a bi-directional signal that runs synchronously to MDC.

The MDIO pin requires a pull-up resistor in a range from 1.5 kΩ to 10 kΩ that pulls the MDIO high during the idle and turnaround phases of read and write operations.

Bit 0 of the PHY address is configured during the hardware reset sequence. PHY address bits[4:1] are set to “0000” internally in the device. Refer to Section 2.18.1, Hardware Configuration, on page 65 for more information on how to configure this.

Typical read and write operations on the management interface are shown in Figure 22 and Figure 23. All the required serial management registers are implemented as well as several optional registers. A description of the registers can be found in Section 3, 88E1510/88E1518/88E1512/88E1514 Register Description, on page 70.

Figure 22: Typical MDC/MDIO Read Operation

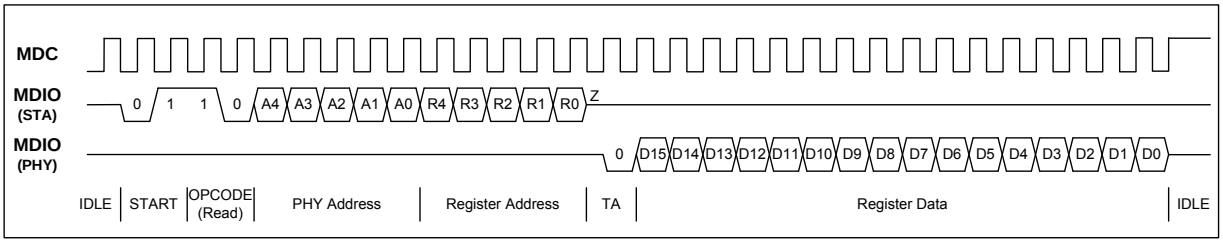

Figure 23: Typical MDC/MDIO Write Operation

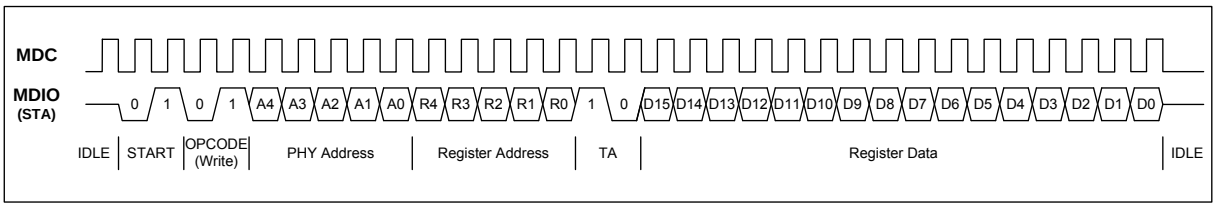

Copyright © 2018 Marvell

Table 58 is an example of a read operation.

Table 58: Serial Management Interface Protocol

32-Bit Preamble	Start of Frame	OpCode Read = 10 Write = 01	5-Bit PHY Device Address	5-Bit PHY Register Address (MSB)	2-Bit Turn around Read = z0 Write = 10	16-Bit Data Field	Idle
11111111	01	10	00000	00000	z0	0001001100000000	11111111

2.18.2.1 Preamble Suppression

The device is permanently programmed for preamble suppression. A minimum of one idle bit is required between operations.

2.19 Jumbo Packet Support

The device supports jumbo packets up to 16Kbytes on all data paths.

2.20 Temperature Sensor

The device features an internal temperature sensor. The sensor reports the die temperature and is updated approximately once per second. The temperature is obtained by reading the value in Register 26_6:4:0 and performing conversion functions as described in Table 59.

An interrupt can be generated when the temperature exceeds a certain threshold.

Register 26_6.6 is set high whenever the temperature is greater than or equal to the value programmed in register 26_6.12:8. Register 26_6.6 remains high until read.

Register 26_6.7 controls whether the interrupt pin is asserted when register 26_6.6 is high.

Table 59: Temperature Sensor

Register	Function	Setting	Mode	HW Rst	SW Rst
26_6.12:8	Temperature Threshold	Temperature in C = 5 x 26_6.4:0 - 25 i.e., for 100C the value is 11001	R/W	11001	Retain
26_6.7	Temperature Sensor Interrupt Enable	1= Interrupt Enable 0 = Interrupt Enable	R/W	0	Retain
26_6.6	Temperature Sensor Interrupt	1 = Temperature Reached Threshold 0 = Temperature Below Threshold	RO, LH	0	0
26_6.4:0	Temperature Sensor	Temperature in C = 5 x 26_6.4:0 - 25 i.e., for 100C the value is 11001	RO	xxxxx	xxxxx

2.21 Regulators and Power Supplies

The 88E1510/88E1518/88E1512/88E1514 devices have built-in switch-cap regulators to support single rail operation from a 3.3V source. These internal regulators generate 1.8V and 1.0V. The integrated regulators greatly reduce the PCB BOM cost. If regulators are not used, external supplies (1.8V and 1.0V)are needed. Table 60 and Table 61 lists the valid combinations of regulator usage.

The VDDO supply can run at 2.5V or 3.3V for the 88E1510 and 1.8V for 88E1518. 88E1512/88E1514 VDDO can operate at 1.8V/2.5V/3.3V supplies depending on the VDDO_SEL pin selection.

Note

- If VDDO is tied to either 1.8V or 2.5V, then the I/Os are not 3.3V tolerant.
- AVDDC18 is tied to 1.8V, so the XTAL_IN pin is not 2.5V/3.3V tolerant.

Table 60: Power Supply Options - Integrated Switching Regulator (REG_IN)

Functional Description	AVDD33	AVDDC18/AVDD18	DVDD	Setup
Supply Source	3.3V	1.8V from Internal Regulator	1.0V from Internal Regulator	Single 3.3V external supply Internal regulator enabled

Table 61: Power Supply Options - External Supplies

Functional Description	AVDD33	AVDDC18/AVDD18	DVDD	Setup
Supply Source	3.3V	1.8V External	1.0V from External	3.3V, 1.8V, 1.0V external supplies Internal regulator disabled.

Note

When internal regulator option is preferred, both 1.0V and 1.8V regulators must be used. Supplying 1.0V internally and 1.8V externally (or vice versa) is not supported.

2.21.1 AVDD18

AVDD18 is used as the 1.8V analog supply. AVDD18 can be supplied externally with 1.8V, or via the 1.8V regulator.

2.21.2 AVDDC18

AVDDC18 is used as a 1.8V analog supply for XTAL_IN/OUT pins. AVDDC18 can be supplied externally with 1.8V, or via the 1.8V regulator.

2.21.3 AVDD33

AVDD33 is used as a 3.3V analog supply.

Copyright © 2018 Marvell

2.21.4 DVDD

DVDD is used as the 1.0V digital supply. DVDD can be supplied externally with 1.0V, or via the internal switching 1.0V regulator.

2.21.5 REG_IN

REG_IN is used as the 3.3V supply to the internal regulator that generates the 1.8V for AVDD18 and AVDDC18 and 1.0V for DVDD. If the 1.8V or 1.0V regulators are not used, REG_IN must be left floating in addition to leaving REGCAP1 and REGCAP2 floating.

2.21.6 AVDD18_OUT

AVDD18_OUT is the internal regulator 1.8V output. This must be connected to 1.8V power plane that connects to AVDD18 and AVDDC18. If an external supply is used to supply AVDD18 and AVDDC18, AVDD18_OUT must be left floating.

2.21.7 DVDD_OUT

DVDD_OUT is the internal regulator 1.0V output. When internal regulator is used, DVDD_OUT must be connected to the DVDD plane. If an external supply is used to supply DVDD, DVDD_OUT must be left floating.

2.21.8 VDDO

VDDO supplies all digital I/O pins which use LVCMOS I/O standards. The supported voltages are 2.5V or 3.3V for 88E1510. 88E1518 supports only 1.8V. 88E1512/88E1514 supports 2.5V/3.3V if VDDO_SEL is tied to VSS and 1.8V if VDDO_SEL is tied to VDDO which is 1.8V. For VDDO 1.8V operation, the power can be supplied by the internal regulator.

2.21.9 Power Supply Sequencing

On power-up, no special power supply sequencing is required.

3 88E1510/88E1518/88E1512/88E1514 Register Description

Table 62 below defines the register types used in the register map.

Table 62: Register Types

Type	Description
LH	Register field with latching high function. If status is high, then the register is set to one and remains set until a read operation is performed through the management interface or a reset occurs.
LL	Register field with latching low function. If status is low, then the register is cleared to zero and remains zero until a read operation is performed through the management interface or a reset occurs.
RES	Reserved. All reserved bits are read as zero unless otherwise noted.
Retain	The register value is retained after software reset is executed.
RO	Read only.
ROC	Read only clear. After read, register field is cleared.
RW	Read and Write with initial value indicated.
RWC	Read/Write clear on read. All bits are readable and writable. After reset or after the register field is read, register field is cleared to zero.
SC	Self-Clear. Writing a one to this register causes the desired function to be immediately executed, then the register field is automatically cleared to zero when the function is complete.
Update	Value written to the register field doesn't take effect until soft reset is executed.
WO	Write only. Reads from this type of register field return undefined data.
NR	Non-Rollover Register

3.1 PHY MDIO Register Description

The device supports Clause 22 MDIO register access protocol.

Table 63: Register Map

Register Name	Register Address	Table and Page
Copper Control Register	Page 0, Register 0	Table 64, p. 72
Copper Status Register	Page 0, Register 1	Table 65, p. 74
PHY Identifier 1	Page 0, Register 2	Table 66, p. 75
PHY Identifier 2	Page 0, Register 3	Table 67, p. 76
Copper Auto-Negotiation Advertisement Register	Page 0, Register 4	Table 68, p. 76
Copper Link Partner Ability Register - Base Page	Page 0, Register 5	Table 69, p. 79
Copper Auto-Negotiation Expansion Register	Page 0, Register 6	Table 70, p. 80
Copper Next Page Transmit Register	Page 0, Register 7	Table 71, p. 80
Copper Link Partner Next Page Register	Page 0, Register 8	Table 72, p. 81
1000BASE-T Control Register	Page 0, Register 9	Table 73, p. 81

Copyright © 2018 Marvell

Table 63: Register Map (Continued)

Register Name	Register Address	Table and Page
1000BASE-T Status Register	Page 0, Register 10	Table 74, p. 82
Extended Status Register	Page 0, Register 15	Table 75, p. 83
Copper Specific Control Register 1	Page 0, Register 16	Table 76, p. 83
Copper Specific Status Register 1	Page 0, Register 17	Table 77, p. 85
Copper Specific Interrupt Enable Register	Page 0, Register 18	Table 78, p. 86
Copper Interrupt Status Register	Page 0, Register 19	Table 79, p. 87
Copper Specific Control Register 2	Page 0, Register 20	Table 80, p. 88
Copper Specific Receive Error Counter Register	Page 0, Register 21	Table 81, p. 88
Page Address	Page Any, Register 22	Table 82, p. 89
Global Interrupt Status	Page 0, Register 23	Table 83, p. 89
Fiber Control Register	Page 1, Register 0	Table 84, p. 89
Fiber Status Register	Page 1, Register 1	Table 85, p. 91
PHY Identifier	Page 1, Register 2	Table 86, p. 92
PHY Identifier	Page 1, Register 3	Table 87, p. 92
Fiber Auto-Negotiation Advertisement Register - 1000BASE-X Mode (Register 16_1.1:0 = 01)	Page 1, Register 4	Table 88, p. 92
Fiber Auto-Negotiation Advertisement Register - SGMII (System mode) (Register 16_1.1:0 = 10)	Page 1, Register 4	Table 89, p. 94
Fiber Auto-Negotiation Advertisement Register - SGMII (Media mode) (Register 16_1.1:0 = 11)	Page 1, Register 4	Table 90, p. 94
Fiber Link Partner Ability Register - 1000BASE-X Mode (Register 16_1.1:0 = 01)	Page 1, Register 5	Table 91, p. 95
Fiber Link Partner Ability Register - SGMII (System mode) (Register 16_1.1:0 = 10)	Page 1, Register 5	Table 92, p. 96
Fiber Link Partner Ability Register - SGMII (Media mode) (Register 16_1.1:0 = 11)	Page 1, Register 5	Table 93, p. 96
Fiber Auto-Negotiation Expansion Register	Page 1, Register 6	Table 94, p. 97
Fiber Next Page Transmit Register	Page 1, Register 7	Table 95, p. 97
Fiber Link Partner Next Page Register	Page 1, Register 8	Table 96, p. 98
Extended Status Register	Page 1, Register 15	Table 75, p. 83
Fiber Specific Control Register 1	Page 1, Register 16	Table 98, p. 99
Fiber Specific Status Register	Page 1, Register 17	Table 99, p. 100
Fiber Interrupt Enable Register	Page 1, Register 18	Table 100, p. 101
Fiber Interrupt Status Register	Page 1, Register 19	Table 101, p. 102
PRBS Control	Page 1, Register 23	Table 102, p. 102
PRBS Error Counter LSB	Page 1, Register 24	Table 103, p. 103
PRBS Error Counter MSB	Page 1, Register 25	Table 104, p. 103
Fiber Specific Control Register 2	Page 1, Register 26	Table 105, p. 103
MAC Specific Control Register 1	Page 2, Register 16	Table 106, p. 104
MAC Specific Interrupt Enable Register	Page 2, Register 18	Table 107, p. 105
MAC Specific Status Register	Page 2, Register 19	Table 108, p. 105
MAC Specific Control Register 2	Page 2, Register 21	Table 109, p. 106

Table 63: Register Map (Continued)

Register Name	Register Address	Table and Page
RGMII Output Impedance Calibration Override	Page 2, Register 24	Table 110, p. 107
LED[2:0] Function Control Register	Page 3, Register 16	Table 111, p. 108
LED[2:0] Polarity Control Register	Page 3, Register 17	Table 112, p. 109
LED Timer Control Register	Page 3, Register 18	Table 113, p. 110
1000BASE-T Pair Skew Register	Page 5, Register 20	Table 114, p. 111
1000BASE-T Pair Swap and Polarity	Page 5, Register 21	Table 115, p. 111
Copper Port Packet Generation	Page 6, Register 16	Table 116, p. 111
Copper Port CRC Counters	Page 6, Register 17	Table 117, p. 112
Checker Control	Page 6, Register 18	Table 118, p. 112
Copper Port Packet Generation	Page 6, Register 19	Table 119, p. 113
Late Collision Counters 1 & 2	Page 6, Register 23	Table 120, p. 113
Late Collision Counters 3 & 4	Page 6, Register 24	Table 121, p. 113
Late Collision Window Adjust/Link Disconnect	Page 6, Register 25	Table 122, p. 114
Misc Test	Page 6, Register 26	Table 123, p. 114
Misc Test: Temperature Sensor Alternative Reading	Page 6, Register 27	Table 124, p. 114
Packet Generation	Page 18, Register 16	Table 125, p. 115
CRC Counters	Page 18, Register 17	Table 126, p. 116
Checker Control	Page 18, Register 18	Table 127, p. 116
Packet Generation	Page 18, Register 19	Table 128, p. 116
General Control Register 1	Page 18, Register 20	Table 129, p. 117

Table 64: Copper Control Register
Page 0, Register 0

Bits	Field	Mode	HW Rst	SW Rst	Description
15	Copper Reset	R/W, SC	0x0	SC	Copper Software Reset. Affects pages 0, 2, 3, 5, and 7. Writing a 1 to this bit causes the PHY state machines to be reset. When the reset operation is done, this bit is cleared to 0 automatically. The reset occurs immediately. 1 = PHY reset 0 = Normal operation
14	Loopback	R/W	0x0	0x0	When loopback is activated, the data from the MAC presented to the PHY is looped back inside the PHY and then sent back to the MAC. Link is broken when loopback is enabled. Loopback speed is determined by Registers 21_2.6,13. 1 = Enable Loopback 0 = Disable Loopback

Copyright © 2018 Marvell

Table 64: Copper Control Register (Continued)
Page 0, Register 0

Bits	Field	Mode	HW Rst	SW Rst	Description
13	Speed Select (LSB)	R/W	0x0	Update	Changes to this bit are disruptive to the normal operation; therefore, any changes to these registers must be followed by a software reset to take effect. A write to this register bit does not take effect until any one of the following also occurs: Software reset is asserted (Register 0_0.15) Restart Auto-Negotiation is asserted (Register 0_0.9) Power down (Register 0_0.11, 16_0.2) transitions from power down to normal operation Bit 6, 13 11 = Reserved 10 = 1000 Mbps 01 = 100 Mbps 00 = 10 Mbps
12	Auto-Negotiation Enable	R/W	0x1	Update	Changes to this bit are disruptive to the normal operation. A write to this register bit does not take effect until any one of the following occurs: Software reset is asserted (Register 0_0.15) Restart Auto-Negotiation is asserted (Register 0_0.9) Power down (Register 0_0.11, 16_0.2) transitions from power down to normal operation If Register 0_0.12 is set to 0 and speed is manually forced to 1000 Mbps in Registers 0.13 and 0.6, then Auto-Negotiation will still be enabled and only 1000BASE-T full-duplex is advertised if register 0_0.8 is set to 1, and 1000BASE-T half-duplex is advertised if 0.8 is set to 0. Registers 4.8:5 and 9.9:8 are ignored. Auto-Negotiation is mandatory per IEEE for proper operation in 1000BASE-T. 1 = Enable Auto-Negotiation Process 0 = Disable Auto-Negotiation Process
11	Power Down	R/W	0x0	Retain	Power down is controlled via register 0.11 and 16_0.2. Both bits must be set to 0 before the PHY will transition from power down to normal operation. When the port is switched from power down to normal operation, software reset and restart Auto-Negotiation are performed even when bits Reset (0_15) and Restart Auto-Negotiation (0.9) are not set by the user. IEEE power down shuts down the chip except for the RGMII interface if 16_2.3 is set to 1. If 16_2.3 is set to 0, then the RGMII interface also shuts down. 1 = Power down 0 = Normal operation
10	Isolate	R/W	0x0	0x0	1 = Isolate 0 = Normal Operation
9	Restart Copper Auto-Negotiation	R/W, SC	0x0	SC	Auto-Negotiation automatically restarts after hardware or software reset regardless of whether or not the restart bit (0_0.9) is set. 1 = Restart Auto-Negotiation Process 0 = Normal operation

Table 64: Copper Control Register (Continued)
Page 0, Register 0

Bits	Field	Mode	HW Rst	SW Rst	Description
8	Copper Duplex Mode	R/W	0x1	Update	Changes to this bit are disruptive to the normal operation; therefore, any changes to these registers must be followed by a software reset to take effect. A write to this register bit does not take effect until any one of the following also occurs: Software reset is asserted (Register 0_0.15) Restart Auto-Negotiation is asserted (Register 0_0.9) Power down (Register 0_0.11, 16_0.2) transitions from power down to normal operation 1 = Full-duplex 0 = Half-Duplex
7	Collision Test	RO	0x0	0x0	This bit has no effect.
6	Speed Selection (MSB)	R/W	0x1	Update	Changes to this bit are disruptive to the normal operation; therefore, any changes to these registers must be followed by a software reset to take effect. A write to this register bit does not take effect until any one of the following occurs: Software reset is asserted (Register 0_0.15) Restart Auto-Negotiation is asserted (Register 0_0.9) Power down (Register 0_0.11, 16_0.2) transitions from power down to normal operation bit 6, 13 11 = Reserved 10 = 1000 Mbps 01 = 100 Mbps 00 = 10 Mbps
5:0	Reserved	RO	Always 000000	Always 000000	Will always be 0.

Table 65: Copper Status Register
Page 0, Register 1

Bits	Field	Mode	HW Rst	SW Rst	Description
15	100BASE-T4	RO	Always 0	Always 0	100BASE-T4. This protocol is not available. 0 = PHY not able to perform 100BASE-T4
14	100BASE-X Full-Duplex	RO	Always 1	Always 1	1 = PHY able to perform full-duplex 100BASE-X
13	100BASE-X Half-Duplex	RO	Always 1	Always 1	1 = PHY able to perform half-duplex 100BASE-X
12	10 Mbps Full-Duplex	RO	Always 1	Always 1	1 = PHY able to perform full-duplex 10BASE-T
11	10 Mbps Half-Duplex	RO	Always 1	Always 1	1 = PHY able to perform half-duplex 10BASE-T
10	100BASE-T2 Full-Duplex	RO	Always 0	Always 0	This protocol is not available. 0 = PHY not able to perform full-duplex

Copyright © 2018 Marvell

Table 65: Copper Status Register (Continued)
Page 0, Register 1

Bits	Field	Mode	HW Rst	SW Rst	Description
9	100BASE-T2 Half-Duplex	RO	Always 0	Always 0	This protocol is not available. 0 = PHY not able to perform half-duplex
8	Extended Status	RO	Always 1	Always 1	1 = Extended status information in Register 15
7	Reserved	RO	Always 0	Always 0	Must always be 0.
6	MF Preamble Suppression	RO	Always 1	Always 1	1 = PHY accepts management frames with preamble suppressed
5	Copper Auto-Negotiation Complete	RO	0x0	0x0	1 = Auto-Negotiation process complete 0 = Auto-Negotiation process not complete
4	Copper Remote Fault	RO,LH	0x0	0x0	1 = Remote fault condition detected 0 = Remote fault condition not detected
3	Auto-Negotiation Ability	RO	Always 1	Always 1	1 = PHY able to perform Auto-Negotiation
2	Copper Link Status	RO,LL	0x0	0x0	This register bit indicates that link was down since the last read. For the current link status, either read this register back-to-back or read Register 17_0.10 Link Real Time. 1 = Link is up 0 = Link is down
1	Jabber Detect	RO,LH	0x0	0x0	1 = Jabber condition detected 0 = Jabber condition not detected
0	Extended Capability	RO	Always 1	Always 1	1 = Extended register capabilities

Table 66: PHY Identifier 1
Page 0, Register 2

Bits	Field	Mode	HW Rst	SW Rst	Description
15:0	Organizationally Unique Identifier Bit 3:18	RO	0x0141	0x0141	Marvell® OUI is 0x005043 0000 0000 0101 0000 0100 0011 ^ ^ bit 1.....bit 24 Register 2.[15:0] show bits 3 to 18 of the OUI. 0000000101000001 ^ ^ bit 3.....bit18

Table 67: PHY Identifier 2
Page 0, Register 3

Bits	Field	Mode	HW Rst	SW Rst	Description
15:10	OUI Lsb	RO	Always 000011	Always 000011	Organizationally Unique Identifier bits 19:24 00 0011 ^.....^ bit 19...bit24
9:4	Model Number	RO	Always 011101	Always 011101	Model Number 011101
3:0	Revision Number	RO	See Descr	See Descr	Rev Number. Contact Marvell® FAEs for information on the device revision number.

Table 68: Copper Auto-Negotiation Advertisement Register
Page 0, Register 4

Bits	Field	Mode	HW Rst	SW Rst	Description
15	Next Page	R/W	0x0	Update	A write to this register bit does not take effect until any one of the following occurs: Software reset is asserted (Register 0_0.15) Restart Auto-Negotiation is asserted (Register 0_0.9) Power down (Register 0_0.11, 16_0.2) transitions from power down to normal operation Copper link goes down. If 1000BASE-T is advertised then the required next pages are automatically transmitted. Register 4.15 should be set to 0 if no additional next pages are needed. 1 = Advertise 0 = Not advertised
14	Ack	RO	Always 0	Always 0	Must be 0.
13	Remote Fault	R/W	0x0	Update	A write to this register bit does not take effect until any one of the following occurs: Software reset is asserted (Register 0_0.15) Restart Auto-Negotiation is asserted (Register 0_0.9) Power down (Register 0_0.11, 16_0.2) transitions from power down to normal operation Copper link goes down. 1 = Set Remote Fault bit 0 = Do not set Remote Fault bit
12	Reserved	R/W	0x0	Update	A write to this register bit does not take effect until any one of the following occurs: Software reset is asserted (Register 0_0.15) Restart Auto-Negotiation is asserted (Register 0_0.9) Power down (Register 0_0.11, 16_0.2) transitions from power down to normal operation Copper link goes down Reserved bit is R/W to allow for forward compatibility with future IEEE standards.

Copyright © 2018 Marvell

Table 68: Copper Auto-Negotiation Advertisement Register (Continued)
Page 0, Register 4

Bits	Field	Mode	HW Rst	SW Rst	Description
11	Asymmetric Pause	R/W	0x0	Update	A write to this register bit does not take effect until any one of the following occurs: Software reset is asserted (Register 0.15) Restart Auto-Negotiation is asserted (Register 0.9) Power down (Register 0.11, 16_0.2) transitions from power down to normal operation Copper link goes down. 1 = Asymmetric Pause 0 = No asymmetric Pause
10	Pause	R/W	0x0	Update	A write to this register bit does not take effect until any one of the following occurs: Software reset is asserted (Register 0.15) Restart Auto-Negotiation is asserted (Register 0.9) Power down (Register 0.11, 16_0.2) transitions from power down to normal operation Copper link goes down. 1 = MAC PAUSE implemented 0 = MAC PAUSE not implemented
9	100BASE-T4	R/W	0x0	Retain	0 = Not capable of 100BASE-T4
8	100BASE-TX Full-Duplex	R/W	0x1	Update	A write to this register bit does not take effect until any one of the following occurs: Software reset is asserted (Register 0.15) Restart Auto-Negotiation is asserted (Register 0.9) Power down (Register 0.11, 16_0.2) transitions from power down to normal operation Copper link goes down. If register 0.12 is set to 0 and speed is manually forced to 1000 Mbps in Registers 0.13 and 0.6, then Auto-Negotiation will still be enabled and only 1000BASE-T full-duplex is advertised if register 0.8 is set to 1, and 1000BASE-T half-duplex is advertised if 0.8 set to 0. Registers 4.8:5 and 9.9:8 are ignored. Auto-Negotiation is mandatory per IEEE for proper operation in 1000BASE-T. 1 = Advertise 0 = Not advertised

Table 68: Copper Auto-Negotiation Advertisement Register (Continued)
Page 0, Register 4

Bits	Field	Mode	HW Rst	SW Rst	Description
7	100BASE-TX Half-Duplex	R/W	0x1	Update	A write to this register bit does not take effect until any one of the following occurs: Software reset is asserted (Register 0.15) Restart Auto-Negotiation is asserted (Register 0.9) Power down (Register 0.11, 16_0.2) transitions from power down to normal operation Copper link goes down. If register 0.12 is set to 0 and speed is manually forced to 1000 Mbps in Registers 0.13 and 0.6, then Auto-Negotiation will still be enabled and only 1000BASE-T full-duplex is advertised if register 0.8 is set to 1, and 1000BASE-T half-duplex is advertised if 0.8 set to 0. Registers 4.8:5 and 9.9:8 are ignored. Auto-Negotiation is mandatory per IEEE for proper operation in 1000BASE-T. 1 = Advertise 0 = Not advertised
6	10BASE-TX Full-Duplex	R/W	0x1	Update	A write to this register bit does not take effect until any one of the following occurs: Software reset is asserted (Register 0.15) Restart Auto-Negotiation is asserted (Register 0.9) Power down (Register 0.11, 16_0.2) transitions from power down to normal operation Copper link goes down. If register 0.12 is set to 0 and speed is manually forced to 1000 Mbps in Registers 0.13 and 0.6, then Auto-Negotiation will still be enabled and only 1000BASE-T full-duplex is advertised if register 0.8 is set to 1, and 1000BASE-T half-duplex is advertised if 0.8 set to 0. Registers 4.8:5 and 9.9:8 are ignored. Auto-Negotiation is mandatory per IEEE for proper operation in 1000BASE-T. 1 = Advertise 0 = Not advertised
5	10BASE-TX Half-Duplex	R/W	0x1	Update	A write to this register bit does not take effect until any one of the following occurs: Software reset is asserted (Register 0.15) Restart Auto-Negotiation is asserted (Register 0.9) Power down (Register 0.11, 16_0.2) transitions from power down to normal operation Copper link goes down. If register 0.12 is set to 0 and speed is manually forced to 1000 Mbps in Registers 0.13 and 0.6, then Auto-Negotiation will still be enabled and only 1000BASE-T full-duplex is advertised if register 0.8 is set to 1, and 1000BASE-T half-duplex is advertised if 0.8 set to 0. Registers 4.8:5 and 9.9:8 are ignored. Auto-Negotiation is mandatory per IEEE for proper operation in 1000BASE-T. 1 = Advertise 0 = Not advertised

Copyright © 2018 Marvell

Table 68: Copper Auto-Negotiation Advertisement Register (Continued)
Page 0, Register 4

Bits	Field	Mode	HW Rst	SW Rst	Description
4:0	Selector Field	R/W	0x01	Retain	Selector Field mode 00001 = 802.3

Table 69: Copper Link Partner Ability Register - Base Page
Page 0, Register 5

Bits	Field	Mode	HW Rst	SW Rst	Description
15	Next Page	RO	0x0	0x0	Received Code Word Bit 15 1 = Link partner capable of next page 0 = Link partner not capable of next page
14	Acknowledge	RO	0x0	0x0	Acknowledge Received Code Word Bit 14 1 = Link partner received link code word 0 = Link partner does not have Next Page ability
13	Remote Fault	RO	0x0	0x0	Remote Fault Received Code Word Bit 13 1 = Link partner detected remote fault 0 = Link partner has not detected remote fault
12	Technology Ability Field	RO	0x0	0x0	Received Code Word Bit 12
11	Asymmetric Pause	RO	0x0	0x0	Received Code Word Bit 11 1 = Link partner requests asymmetric pause 0 = Link partner does not request asymmetric pause
10	Pause Capable	RO	0x0	0x0	Received Code Word Bit 10 1 = Link partner is capable of pause operation 0 = Link partner is not capable of pause operation
9	100BASE-T4 Capability	RO	0x0	0x0	Received Code Word Bit 9 1 = Link partner is 100BASE-T4 capable 0 = Link partner is not 100BASE-T4 capable
8	100BASE-TX Full-Duplex Capability	RO	0x0	0x0	Received Code Word Bit 8 1 = Link partner is 100BASE-TX full-duplex capable 0 = Link partner is not 100BASE-TX full-duplex capable
7	100BASE-TX Half-Duplex Capability	RO	0x0	0x0	Received Code Word Bit 7 1 = Link partner is 100BASE-TX half-duplex capable 0 = Link partner is not 100BASE-TX half-duplex capable
6	10BASE-T Full-Duplex Capability	RO	0x0	0x0	Received Code Word Bit 6 1 = Link partner is 10BASE-T full-duplex capable 0 = Link partner is not 10BASE-T full-duplex capable
5	10BASE-T Half-Duplex Capability	RO	0x0	0x0	Received Code Word Bit 5 1 = Link partner is 10BASE-T half-duplex capable 0 = Link partner is not 10BASE-T half-duplex capable

Table 69: Copper Link Partner Ability Register - Base Page (Continued)
Page 0, Register 5

Bits	Field	Mode	HW Rst	SW Rst	Description
4:0	Selector Field	RO	0x00	0x00	Selector Field Received Code Word Bit 4:0

Table 70: Copper Auto-Negotiation Expansion Register
Page 0, Register 6

Bits	Field	Mode	HW Rst	SW Rst	Description
15:5	Reserved	RO	0x000	0x000	Reserved. Must be 00000000000.
4	Parallel Detection Fault	RO,LH	0x0	0x0	Register 6_0.4 is not valid until the Auto-Negotiation complete bit (Reg 1_0.5) indicates completed. 1 = A fault has been detected via the Parallel Detection function 0 = A fault has not been detected via the Parallel Detection function
3	Link Partner Next page Able	RO	0x0	0x0	Register 6_0.3 is not valid until the Auto-Negotiation complete bit (Reg 1_0.5) indicates completed. 1 = Link Partner is Next Page able 0 = Link Partner is not Next Page able
2	Local Next Page Able	RO	0x1	0x1	Register 6_0.2 is not valid until the Auto-Negotiation complete bit (Reg 1_0.5) indicates completed. 1 = Local Device is Next Page able 0 = Local Device is not Next Page able
1	Page Received	RO, LH	0x0	0x0	Register 6_0.1 is not valid until the Auto-Negotiation complete bit (Reg 1_0.5) indicates completed. 1 = A New Page has been received 0 = A New Page has not been received
0	Link Partner Auto-Negotiation Able	RO	0x0	0x0	Register 6_0.0 is not valid until the Auto-Negotiation complete bit (Reg 1_0.5) indicates completed. 1 = Link Partner is Auto-Negotiation able 0 = Link Partner is not Auto-Negotiation able

Table 71: Copper Next Page Transmit Register
Page 0, Register 7

Bits	Field	Mode	HW Rst	SW Rst	Description
15	Next Page	R/W	0x0	0x0	A write to register 7_0 implicitly sets a variable in the Auto-Negotiation state machine indicating that the next page has been loaded. Link fail will clear Reg 7_0. Transmit Code Word Bit 15
14	Reserved	RO	0x0	0x0	Transmit Code Word Bit 14

Copyright © 2018 Marvell

Table 71: Copper Next Page Transmit Register (Continued)
Page 0, Register 7

Bits	Field	Mode	HW Rst	SW Rst	Description
13	Message Page Mode	R/W	0x1	0x1	Transmit Code Word Bit 13
12	Acknowledge2	R/W	0x0	0x0	Transmit Code Word Bit 12
11	Toggle	RO	0x0	0x0	Transmit Code Word Bit 11
10:0	Message/ Unformatted Field	R/W	0x001	0x001	Transmit Code Word Bit 10:0

Table 72: Copper Link Partner Next Page Register
Page 0, Register 8

Bits	Field	Mode	HW Rst	SW Rst	Description
15	Next Page	RO	0x0	0x0	Received Code Word Bit 15
14	Acknowledge	RO	0x0	0x0	Received Code Word Bit 14
13	Message Page	RO	0x0	0x0	Received Code Word Bit 13
12	Acknowledge2	RO	0x0	0x0	Received Code Word Bit 12
11	Toggle	RO	0x0	0x0	Received Code Word Bit 11
10:0	Message/ Unformatted Field	RO	0x000	0x000	Received Code Word Bit 10:0

Table 73: 1000BASE-T Control Register
Page 0, Register 9

Bits	Field	Mode	HW Rst	SW Rst	Description
15:13	Test Mode	R/W	0x0	Retain	TX_CLK comes from the RX_CLK pin for jitter testing in test modes 2 and 3. After exiting the test mode, hardware reset or software reset (Register 0_0.15) should be issued to ensure normal operation. A restart of Auto-Negotiation will clear these bits. 000 = Normal Mode 001 = Test Mode 1 - Transmit Waveform Test 010 = Test Mode 2 - Transmit Jitter Test (MASTER mode) 011 = Test Mode 3 - Transmit Jitter Test (SLAVE mode) 100 = Test Mode 4 - Transmit Distortion Test 101, 110, 111 = Reserved
12	MASTER/SLAVE Manual Configuration Enable	R/W	0x0	Update	A write to this register bit does not take effect until any of the following also occurs: Software reset is asserted (Register 0_0.15) Restart Auto-Negotiation is asserted (Register 0_0.9) Power down (Register 0_0.11, 16_0.2) transitions from power down to normal operation Copper link goes down. 1 = Manual MASTER/SLAVE configuration 0 = Automatic MASTER/SLAVE configuration

Table 73: 1000BASE-T Control Register (Continued)
Page 0, Register 9

Bits	Field	Mode	HW Rst	SW Rst	Description
11	MASTER/SLAVE Configuration Value	R/W	0x0	Update	A write to this register bit does not take effect until any of the following also occurs: Software reset is asserted (Register 0.15) Restart Auto-Negotiation is asserted (Register 0.9) Power down (Register 0.11, 16_0.2) transitions from power down to normal operation Copper link goes down. 1 = Manual configure as MASTER 0 = Manual configure as SLAVE
10	Port Type	R/W	0x0	Update	A write to this register bit does not take effect until any of the following also occurs: Software reset is asserted (Register 0_0.15) Restart Auto-Negotiation is asserted (Register 0_0.9) Power down (Register 0_0.11, 16_0.2) transitions from power down to normal operation Copper link goes down. Register 9_0.10 is ignored if Register 9_0.12 is equal to 1. 1 = Prefer multi-port device (MASTER) 0 = Prefer single port device (SLAVE)
9	1000BASE-T Full-Duplex	R/W	0x1	Update	A write to this register bit does not take effect until any of the following also occurs: Software reset is asserted (Register 0_0.15) Restart Auto-Negotiation is asserted (Register 0_0.9) Power down (Register 0_0.11, 16_0.2) transitions from power down to normal operation Link goes down 1 = Advertise 0 = Not advertised
8	1000BASE-T Half-Duplex	R/W	0x1	Update	A write to this register bit does not take effect until any of the following also occurs: Software reset is asserted (Register 0.15) Restart Auto-Negotiation is asserted (Register 0.9) Power down (Register 0.11, 16_0.2) transitions from power down to normal operation Copper link goes down. 1 = Advertise 0 = Not advertised
7:0	Reserved	R/W	0x00	Retain	0

Table 74: 1000BASE-T Status Register
Page 0, Register 10

Bits	Field	Mode	HW Rst	SW Rst	Description
15	MASTER/SLAVE Configuration Fault	RO,LH	0x0	0x0	This register bit will clear on read. 1 = MASTER/SLAVE configuration fault detected 0 = No MASTER/SLAVE configuration fault detected

Copyright © 2018 Marvell

Table 74: 1000BASE-T Status Register (Continued)
Page 0, Register 10

Bits	Field	Mode	HW Rst	SW Rst	Description
14	MASTER/SLAVE Configuration Resolution	RO	0x0	0x0	1 = Local PHY configuration resolved to MASTER 0 = Local PHY configuration resolved to SLAVE
13	Local Receiver Status	RO	0x0	0x0	1 = Local Receiver OK 0 = Local Receiver is Not OK
12	Remote Receiver Status	RO	0x0	0x0	1 = Remote Receiver OK 0 = Remote Receiver Not OK
11	Link Partner 1000BASE-T Full-Duplex Capability	RO	0x0	0x0	1 = Link Partner is capable of 1000BASE-T full-duplex 0 = Link Partner is not capable of 1000BASE-T full-duplex
10	Link Partner 1000BASE-T Half-Duplex Capability	RO	0x0	0x0	1 = Link Partner is capable of 1000BASE-T half-duplex 0 = Link Partner is not capable of 1000BASE-T half-duplex
9:8	Reserved	RO	0x0	0x0	Reserved
7:0	Idle Error Count	RO, SC	0x00	0x00	MSB of Idle Error Counter These register bits report the idle error count since the last time this register was read. The counter pegs at 11111111 and will not roll over.

Table 75: Extended Status Register
Page 0, Register 15

Bits	Field	Mode	HW Rst	SW Rst	Description
15	1000BASE-X Full-Duplex	RO	Always 0	Always 0	0 = Not 1000BASE-X full-duplex capable
14	1000BASE-X Half-Duplex	RO	Always 0	Always 0	0 = Not 1000BASE-X half-duplex capable
13	1000BASE-T Full-Duplex	RO	Always 1	Always 1	1 = 1000BASE-T full-duplex capable
12	1000BASE-T Half-Duplex	RO	Always 1	Always 1	1 = 1000BASE-T half-duplex capable
11:0	Reserved	RO	0x000	0x000	000000000000

Table 76: Copper Specific Control Register 1
Page 0, Register 16

Bits	Field	Mode	HW Rst	SW Rst	Description
15	Disable Link Pulses	R/W	0x0	0x0	1 = Disable Link Pulse 0 = Enable Link Pulse
14:12	Reserved	R/W	0x3	Update	Reserved Do not write any value other than the HW Rst value.

Table 76: Copper Specific Control Register 1 (Continued)
Page 0, Register 16

Bits	Field	Mode	HW Rst	SW Rst	Description
11	Reserved	R/W	0x0	Update	Reserved Do not write any value other than the HW Rst value.
10	Force Copper Link Good	R/W	0x0	Retain	If link is forced to be good, the link state machine is bypassed and the link is always up. In 1000BASE-T mode this has no effect. 1 = Force link good 0 = Normal operation
9:8	Energy Detect	R/W	0x0	Update	0x = Off 10 = Sense only on Receive (Energy Detect) 11 = Sense and periodically transmit NLP (Energy Detect+TM)
7	Reserved				Reserved.
6:5	MDI Crossover Mode	R/W	0x3	Update	Changes to these bits are disruptive to the normal operation; therefore, any changes to these registers must be followed by a software reset to take effect. 00 = Manual MDI configuration 01 = Manual MDIX configuration 10 = Reserved 11 = Enable automatic crossover for all modes
4	Reserved	R/W	0x0	Retain	Set to 0
3	Copper Transmitter Disable	R/W	0x0	Retain	1 = Transmitter Disable 0 = Transmitter Enable
2	Power Down	R/W	0x0	Retain	Power down is controlled via register 0_0.11 and 16_0.2. Both bits must be set to 0 before the PHY will transition from power down to normal operation. When the port is switched from power down to normal operation, software reset and restart Auto-Negotiation are performed even when bits Reset (0_0.15) and Restart Auto-Negotiation (0_0.9) are not set by the user. 1 = Power down 0 = Normal operation
1	Polarity Reversal Disable	R/W	0x0	Retain	If polarity is disabled, then the polarity is forced to be normal in 10BASE-T. 1 = Polarity Reversal Disabled 0 = Polarity Reversal Enabled The detected polarity status is shown in Register 17_0.1, or in 1000BASE-T mode, 21_5.3:0.
0	Disable Jabber	R/W	0x0	Retain	Jabber has effect only in 10BASE-T half-duplex mode. 1 = Disable jabber function 0 = Enable jabber function

Copyright © 2018 Marvell

Table 77: Copper Specific Status Register 1
Page 0, Register 17

Bits	Field	Mode	HW Rst	SW Rst	Description
15:14	Speed	RO	0x2	Retain	These status bits are valid only after resolved bit 17_0.11 = 1. The resolved bit is set when Auto-Negotiation is completed or Auto-Negotiation is disabled. 11 = Reserved 10 = 1000 Mbps 01 = 100 Mbps 00 = 10 Mbps
13	Duplex	RO	0x0	Retain	This status bit is valid only after resolved bit 17_0.11 = 1. The resolved bit is set when Auto-Negotiation is completed or Auto-Negotiation is disabled. 1 = Full-duplex 0 = Half-duplex
12	Page Received	RO, LH	0x0	0x0	1 = Page received 0 = Page not received
11	Speed and Duplex Resolved	RO	0x0	0x0	When Auto-Negotiation is not enabled 17_0.11 = 1. 1 = Resolved 0 = Not resolved
10	Copper Link (real time)	RO	0x0	0x0	1 = Link up 0 = Link down
9	Transmit Pause Enabled	RO	0x0	0x0	This is a reflection of the MAC pause resolution. This bit is for information purposes and is not used by the device. This status bit is valid only after resolved bit 17_0.11 = 1. The resolved bit is set when Auto-Negotiation is completed or Auto-Negotiation is disabled. 1 = Transmit pause enabled 0 = Transmit pause disable
8	Receive Pause Enabled	RO	0x0	0x0	This is a reflection of the MAC pause resolution. This bit is for information purposes and is not used by the device. This status bit is valid only after resolved bit 17_0.11 = 1. The resolved bit is set when Auto-Negotiation is completed or Auto-Negotiation is disabled. 1 = Receive pause enabled 0 = Receive pause disabled
7	Reserved	RO	0x0	0x0	0
6	MDI Crossover Status	RO	0x1	Retain	This status bit is valid only after resolved bit 17_0.11 = 1. The resolved bit is set when Auto-Negotiation is completed or Auto-Negotiation is disabled. This bit is 0 or 1 depending on what is written to 16.6:5 in manual configuration mode. Register 16.6:5 are updated with software reset. 1 = MDIX 0 = MDI
5	Reserved	RO	0x0	0x0	Reserved
4	Copper Energy Detect Status	RO	0x0	0x0	1 = Sleep 0 = Active
3	Global Link Status	RO	0x0	0x0	1 = Copper link is up 0 = Copper link is down

Table 77: Copper Specific Status Register 1 (Continued)
Page 0, Register 17

Bits	Field	Mode	HW Rst	SW Rst	Description
2	Reserved	RO	0x0	0x0	Reserved
1	Polarity (real time)	RO	0x0	0x0	1 = Reversed 0 = Normal Polarity reversal can be disabled by writing to Register 16_0.1. In 1000BASE-T mode, polarity of all pairs are shown in Register 21_5.3:0.
0	Jabber (real time)	RO	0x0	0x0	1 = Jabber 0 = No jabber

Table 78: Copper Specific Interrupt Enable Register
Page 0, Register 18

Bits	Field	Mode	HW Rst	SW Rst	Description
15	Auto-Negotiation Error Interrupt Enable	R/W	0x0	Retain	1 = Interrupt enable 0 = Interrupt disable
14	Speed Changed Interrupt Enable	R/W	0x0	Retain	1 = Interrupt enable 0 = Interrupt disable
13	Duplex Changed Interrupt Enable	R/W	0x0	Retain	1 = Interrupt enable 0 = Interrupt disable
12	Page Received Interrupt Enable	R/W	0x0	Retain	1 = Interrupt enable 0 = Interrupt disable
11	Auto-Negotiation Completed Interrupt Enable	R/W	0x0	Retain	1 = Interrupt enable 0 = Interrupt disable
10	Link Status Changed Interrupt Enable	R/W	0x0	Retain	1 = Interrupt enable 0 = Interrupt disable
9	Symbol Error Interrupt Enable	R/W	0x0	Retain	1 = Interrupt enable 0 = Interrupt disable
8	False Carrier Interrupt Enable	R/W	0x0	Retain	1 = Interrupt enable 0 = Interrupt disable
7	Reserved	R/W	0x0	Retain	Reserved Do not write any value other than the HW Rst value.
6	MDI Crossover Changed Interrupt Enable	R/W	0x0	Retain	1 = Interrupt enable 0 = Interrupt disable
5	Reserved	R/W	0x0	Retain	Reserved Do not write any value other than the HW Rst value.
4	Copper Energy Detect Interrupt Enable	R/W	0x0	Retain	1 = Interrupt enable 0 = Interrupt disable

Copyright © 2018 Marvell

Table 78: Copper Specific Interrupt Enable Register (Continued)
Page 0, Register 18

Bits	Field	Mode	HW Rst	SW Rst	Description
3	FLP Exchange Complete but no Link Interrupt Enable	R/W	0x0	Retain	1 = Interrupt enable 0 = Interrupt disable
2	Reserved	R/W	0x0	Retain	Reserved Do not write any value other than the HW Rst value.
1	Polarity Changed Interrupt Enable	R/W	0x0	Retain	1 = Interrupt enable 0 = Interrupt disable
0	Jabber Interrupt Enable	R/W	0x0	Retain	1 = Interrupt enable 0 = Interrupt disable

Table 79: Copper Interrupt Status Register
Page 0, Register 19

Bits	Field	Mode	HW Rst	SW Rst	Description
15	Copper Auto-Negotiation Error	RO,LH	0x0	0x0	An error is said to occur if MASTER/SLAVE does not resolve, parallel detect fault, no common HCD, or link does not come up after negotiation is completed. 1 = Auto-Negotiation Error 0 = No Auto-Negotiation Error
14	Copper Speed Changed	RO,LH	0x0	0x0	1 = Speed changed 0 = Speed not changed
13	Copper Duplex Changed	RO,LH	0x0	0x0	1 = Duplex changed 0 = Duplex not changed
12	Copper Page Received	RO,LH	0x0	0x0	1 = Page received 0 = Page not received
11	Copper Auto-Negotiation Completed	RO,LH	0x0	0x0	1 = Auto-Negotiation completed 0 = Auto-Negotiation not completed
10	Copper Link Status Changed	RO,LH	0x0	0x0	1 = Link status changed 0 = Link status not changed
9	Copper Symbol Error	RO,LH	0x0	0x0	1 = Symbol error 0 = No symbol error
8	Copper False Carrier	RO,LH	0x0	0x0	1 = False carrier 0 = No false carrier
7	Reserved	RO, LH	0x0	0x0	Reserved
6	MDI Crossover Changed	RO,LH	0x0	0x0	1 = Crossover changed 0 = Crossover not changed
5	Reserved	RO,LH	0x0	0x0	Reserved
4	Copper Energy Detect Changed	RO,LH	0x0	0x0	1 = Energy Detect state changed 0 = No Energy Detect state change detected

Table 79: Copper Interrupt Status Register (Continued)
Page 0, Register 19

Bits	Field	Mode	HW Rst	SW Rst	Description
3	FLP Exchange Complete but no Link	RO,LH	0x0	0x0	1 = FLP Exchange Completed but Link Not Established 0 = No Event Detected
2	Reserved	RO,LH	0x0	0x0	Reserved
1	Polarity Changed	RO,LH	0x0	0x0	1 = Polarity Changed 0 = Polarity not changed
0	Jabber	RO,LH	0x0	0x0	1 = Jabber 0 = No jabber

Table 80: Copper Specific Control Register 2
Page 0, Register 20

Bits	Field	Mode	HW Rst	SW Rst	Description
15:8	Reserved	R/W	0x000	Retain	Write all 0s.
7	Reserved	R/W	0x0	Retain	Reserved Do not write any value other than the HW Rst value.
6	Break Link On Insufficient IPG	R/W	0x0	Retain	0 = Break link on insufficient IPGs in 10BASE-T and 100BASE-TX 1 = Do not break link on insufficient IPGs in 10BASE-T and 100BASE-TX
5	Reserved	R/W	0x1	Update	Reserved Do not write any value other than the HW Rst value.
4	Reserved	R/W	0x0	Retain	Reserved Do not write any value other than the HW Rst value.
3	Reverse MDIP/N[3] Transmit Polarity	R/W	0x0	Retain	0 = Normal Transmit Polarity 1 = Reverse Transmit Polarity
2	Reverse MDIP/N[2] Transmit Polarity	R/W	0x0	Retain	0 = Normal Transmit Polarity 1 = Reverse Transmit Polarity
1	Reverse MDIP/N[1] Transmit Polarity	R/W	0x0	Retain	0 = Normal Transmit Polarity 1 = Reverse Transmit Polarity
0	Reverse MDIP/N[0] Transmit Polarity	R/W	0x0	Retain	0 = Normal Transmit Polarity 1 = Reverse Transmit Polarity

Table 81: Copper Specific Receive Error Counter Register
Page 0, Register 21

Bits	Field	Mode	HW Rst	SW Rst	Description
15:0	Receive Error Count	RO, LH	0x0000	Retain	Counter will peg at 0xFFFF and will not roll over. Both False carrier and symbol errors are reported.

Copyright © 2018 Marvell

Table 82: Page Address
Page Any, Register 22

Bits	Field	Mode	HW Rst	SW Rst	Description
15:8	Reserved	RO	0x00	0x00	All 0's
7:0	Page select for registers 0 to 28	R/W	0x00	Retain	Page Number

Table 83: Global Interrupt Status
Page 0, Register 23

Bits	Field	Mode	HW Rst	SW Rst	Description
15:1	Reserved	RO	0x0000	0x0000	Reserved.
0	Interrupt	RO	0x0	0x0	1 = Interrupt active on port X 0 = No interrupt active on port X

Table 84: Fiber Control Register
Page 1, Register 0

Bits	Field	Mode	HW Rst	SW Rst	Description
15	Fiber Reset	R/W	0x0	SC	Fiber Software Reset. Affects page 1. Writing a 1 to this bit causes the PHY state machines to be reset. When the reset operation is done, this bit is cleared to 0 automatically. The reset occurs immediately. 1 = PHY reset 0 = Normal operation
14	Loopback	R/W	0x0	0x0	When loopback is activated, the transmitter data presented on TXD of the internal bus is looped back to RXD of the internal bus. Link is broken when loopback is enabled. Loopback speed is determined by the mode the device is in. 1000BASE-X - loopback is always in 1000Mbps. 100BASE-FX - loopback is always in 100Mbps. 1 = Enable Loopback 0 = Disable Loopback
13	Speed Select (LSB)	RO, R/W	0x0	Retain	If register 16_1.1:0 (MODE[1:0]) = 00 then this bit is always 1. If register 16_1.1:0 (MODE[1:0]) = 01 then this bit is always 0. If register 16_1.1:0 (MODE[1:0]) = 10 then this bit is 1 when the PHY is at 100Mb/s, else it is 0. If register 16_1.1:0 (MODE[1:0]) = 11 then this bit is R/W. bit 6,13 10 = 1000 Mbps 01 = 100 Mbps 00 = 10 Mbps

Table 84: Fiber Control Register (Continued)
Page 1, Register 0

Bits	Field	Mode	HW Rst	SW Rst	Description
12	Auto-Negotiation Enable	R/W	See Descr	Retain	If the value of this bit is changed, the link will be broken and Auto-Negotiation Restarted This bit has no effect when in 100BASE-FX mode When this bit gets set/reset, Auto-negotiation is restarted (bit 0_1.9 is set to 1). On hardware reset this bit takes on the value of S_ANEG 1 = Enable Auto-Negotiation Process 0 = Disable Auto-Negotiation Process
11	Power Down	R/W	0x0	0x0	When the port is switched from power down to normal operation, software reset and restart Auto-Negotiation are performed even when bits Reset (0_1.15) and Restart Auto-Negotiation (0_1.9) are not set by the user. On hardware reset, bit 0_1.11 1 = Power down 0 = Normal operation
10	Isolate	RO	0x0	0x0	This function is not supported
9	Restart Fiber Auto-Negotiation	R/W, SC	0x0	SC	Auto-Negotiation automatically restarts after hardware, software reset (0_1.15) or change in Auto-Negotiation enable (0_1.12) regardless of whether or not the restart bit (0_1.9) is set. The bit is set when Auto-negotiation is Enabled or Disabled in 0_1.12 1 = Restart Auto-Negotiation Process 0 = Normal operation
8	Duplex Mode	R/W	0x1	Retain	Writing this bit has no effect unless one of the following events occur: Software reset is asserted (Register 0_1.15) Restart Auto-Negotiation is asserted (Register 0_1.9) Auto-Negotiation Enable changes (Register 0_1.12) Power down (Register 0_1.11) transitions from power down to normal operation 1 = Full-duplex 0 = Half-Duplex
7	Collision Test	RO	0x0	0x0	This bit has no effect.
6	Speed Selection (MSB)	RO, R/W	0x1	Retain	If register 16_1.1:0 (MODE[1:0]) = 00 then this bit is always 0. If register 16_1.1:0 (MODE[1:0]) = 01 then this bit is always 1. If register 16_1.1:0 (MODE[1:0]) = 10 then this bit is 1 when the PHY is at 1000Mb/s, else it is 0. If register 16_1.1:0 (MODE[1:0]) = 11 then this bit is R/W. bit 6,13 10 = 1000 Mbps 01 = 100 Mbps 00 = 10 Mbps
5:0	Reserved	RO	Always 000000	Always 000000	Always 0.

Copyright © 2018 Marvell

Table 85: Fiber Status Register
Page 1, Register 1

Bits	Field	Mode	HW Rst	SW Rst	Description
15	100BASE-T4	RO	Always 0	Always 0	100BASE-T4. This protocol is not available. 0 = PHY not able to perform 100BASE-T4
14	100BASE-X Full-Duplex	RO	See Descr	See Descr	If register 16_1.1:0 (MODE[1:0]) = 00 then this bit is 1, else this bit is 0. bit 6,13 1 = PHY able to perform full duplex 100BASE-X 0 = PHY not able to perform full duplex 100BASE-X
13	100BASE-X Half-Duplex	RO	See Descr	See Descr	If register 16_1.1:0 (MODE[1:0]) = 00 then this bit is 1, else this bit is 0. bit 6,13 1 = PHY able to perform half-duplex 100BASE-X 0 = PHY not able to perform half-duplex 100BASE-X
12	10 Mb/s Full Duplex	RO	Always 0	Always 0	0 = PHY not able to perform full-duplex 10BASE-T
11	10 Mbps Half-Duplex	RO	Always 0	Always 0	0 = PHY not able to perform half-duplex 10BASE-T
10	100BASE-T2 Full-Duplex	RO	Always 0	Always 0	This protocol is not available. 0 = PHY not able to perform full-duplex
9	100BASE-T2 Half-Duplex	RO	Always 0	Always 0	This protocol is not available. 0 = PHY not able to perform half-duplex
8	Extended Status	RO	Always 1	Always 1	1 = Extended status information in Register 15
7	Reserved	RO	Always 0	Always 0	Must always be 0.
6	MF Preamble Suppression	RO	Always 1	Always 1	1 = PHY accepts management frames with preamble suppressed
5	Fiber Auto-Negotiation Complete	RO	0x0	0x0	1 = Auto-Negotiation process complete 0 = Auto-Negotiation process not complete Bit is not set when link is up due of Fiber Auto-negotiation Bypass or if Auto-negotiation is disabled.
4	Fiber Remote Fault	RO,LH	0x0	0x0	1 = Remote fault condition detected 0 = Remote fault condition not detected This bit is always 0 in SGMII modes.
3	Auto-Negotiation Ability	RO	See Descr	See Descr	If register 16_1.1:0 (MODE[1:0]) = 00 then this bit is 0, else this bit is 1. bit 6,13 1 = PHY able to perform Auto-Negotiation 0 = PHY not able to perform Auto-Negotiation
2	Fiber Link Status	RO,LL	0x0	0x0	This register bit indicates when link was lost since the last read. For the current link status, either read this register back-to-back or read Register 17_1.10 Link Real Time. 1 = Link is up 0 = Link is down
1	Reserved	RO,LH	Always 0	Always 0	Must be 0

Table 85: Fiber Status Register (Continued)
Page 1, Register 1

Bits	Field	Mode	HW Rst	SW Rst	Description
0	Extended Capability	RO	Always 1	Always 1	1 = Extended register capabilities

Table 86: PHY Identifier
Page 1, Register 2

Bits	Field	Mode	HW Rst	SW Rst	Description
15:0	Organizationally Unique Identifier Bit 3:18	RO	0x0141	0x0141	Marvell® OUI is 0x005043 0000 0000 0101 0000 0100 0011 ^ ^ bit 1.....bit 24 Register 2.[15:0] show bits 3 to 18 of the OUI. 0000000101000001 ^ ^ bit 3.....bit18

Table 87: PHY Identifier
Page 1, Register 3

Bits	Field	Mode	HW Rst	SW Rst	Description
15:10	OUI Lsb	RO	Always 000011	Always 000011	Organizationally Unique Identifier bits 19:24 000011 ^.....^ bit 19...bit24
9:4	Model Number	RO	Always 011101	Always 011101	Model Number 011101
3:0	Revision Number	RO	Always 0000	0x0	Rev Number = 0000

Table 88: Fiber Auto-Negotiation Advertisement Register - 1000BASE-X Mode (Register 16_1.1:0 = 01)
Page 1, Register 4

Bits	Field	Mode	HW Rst	SW Rst	Description
15	Next Page	R/W	0x0	Retain	A write to this register bit does not take effect until any one of the following occurs: Software reset is asserted (Register 0_1.15) Restart Auto-Negotiation is asserted (Register 0_1.9) Power down (Register 0_1.11) transitions from power down to normal operation Link goes down 1 = Advertise 0 = Not advertised

Copyright © 2018 Marvell

Table 88: Fiber Auto-Negotiation Advertisement Register - 1000BASE-X Mode (Register 16_1.1:0 = 01) (Continued)
Page 1, Register 4

Bits	Field	Mode	HW Rst	SW Rst	Description
14	Reserved	RO	Always 0	Always 0	Reserved
13:12	Remote Fault 2/ RemoteFault 1	R/W	0x0	Retain	A write to this register bit does not take effect until any one of the following also occurs: Software reset is asserted (Register 0_1.15) Re-start Auto-Negotiation is asserted (Register 0_1.9) Power down (Register 0_1.11) transitions from power down to normal operation Link goes down Device has no ability to detect remote fault. 00 = No error, link OK (default) 01 = Link Failure 10 = Offline 11 = Auto-Negotiation Error
11:9	Reserved	RO	Always 000	Always 000	Reserved
8:7	Pause	R/W	See Descr.	Retain	A write to this register bit does not take effect until any one of the following also occurs: Software reset is asserted (Register 0_1.15) Re-start Auto-Negotiation is asserted (Register 0_1.9) Power down (Register 0_1.11) transitions from power down to normal operation Link goes down Upon hardware reset both bits takes on the value of ENA_ PAUSE. 00 = No PAUSE 01 = Symmetric PAUSE 10 = Asymmetric PAUSE toward link partner 11 = Both Symmetric PAUSE and Asymmetric PAUSE toward local device.
6	1000BASE-X Half-Duplex	R/W	See Descr.	Retain	A write to this register bit does not take effect until any one of the following also occurs: Software reset is asserted (Register 0_1.15) Re-start Auto-Negotiation is asserted (Register 0_1.9) Power down (Register 0_1.11) transitions from power down to normal operation Link goes down Upon hardware reset this bit takes on the value of C_ANEG[0]. 1 = Advertise 0 = Not advertised
5	1000BASE-X Full-Duplex	R/W	0x1	Retain	A write to this register bit does not take effect until any one of the following also occurs: Software reset is asserted (Register 0_1.15) Re-start Auto-Negotiation is asserted (Register 0_1.9) Power down (Register 0_1.11) transitions from power down to normal operation Link goes down 1 = Advertise 0 = Not advertised

Table 88: Fiber Auto-Negotiation Advertisement Register - 1000BASE-X Mode (Register 16_1.1:0 = 01) (Continued)
Page 1, Register 4

Bits	Field	Mode	HW Rst	SW Rst	Description
4:0	Reserved	R/W	0x00	0x00	Reserved

Table 89: Fiber Auto-Negotiation Advertisement Register - SGMII (System mode) (Register 16_1.1:0 = 10)
Page 1, Register 4

Bits	Field	Mode	HW Rst	SW Rst	Description
15	Link Status	RO	0x0	0x0	0 = Link is Not up on the Copper Interface 1 = Link is up on the Copper Interface
14	Reserved	RO	Always 0	Always 0	Reserved
13	Reserved	RO	Always 0	Always 0	Reserved
12	Duplex Status	RO	0x0	0x0	0 = Interface Resolved to Half-duplex 1 = Interface Resolved to Full-duplex
11:10	Speed[1:0]	RO	0x0	0x0	00 = Interface speed is 10 Mbps 01 = Interface speed is 100 Mbps 10 = Interface speed is 1000 Mbps 11 = Reserved
9	Transmit Pause	RO	0x0	0x0	Note that if register 16_1.7 is set to 0 then this bit is always forced to 0. 0 = Disabled, 1 = Enabled
8	Receive Pause	RO	0x0	0x0	Note that if register 16_1.7 is set to 0 then this bit is always forced to 0. 0 = Disabled, 1 = Enabled
7	Fiber/Copper	RO	0x0	0x0	Note that if register 16_1.7 is set to 0 then this bit is always forced to 0. 0 = Copper media, 1 = Fiber media
6:0	Reserved	RO	Always 0000001	Always 0000001	Reserved

Table 90: Fiber Auto-Negotiation Advertisement Register - SGMII (Media mode) (Register 16_1.1:0 = 11)
Page 1, Register 4

Bits	Field	Mode	HW Rst	SW Rst	Description
15:0	Reserved	RO	Always 0x0001	Always 0x0001	Reserved

Copyright © 2018 Marvell

Table 91: Fiber Link Partner Ability Register - 1000BASE-X Mode (Register 16_1.1:0 = 01) Page 1, Register 5

Bits	Field	Mode	HW Rst	SW Rst	Description
15	Next Page	RO	0x0	0x0	Register bit is cleared when link goes down and loaded when a base page is received Received Code Word Bit 15 1 = Link partner capable of next page 0 = Link partner not capable of next page
14	Acknowledge	RO	0x0	0x0	Register bit is cleared when link goes down and loaded when a base page is received Acknowledge Received Code Word Bit 14 1 = Link partner received link code word 0 = Link partner has not received link code word
13:12	Remote Fault 2/ Remote Fault 1	RO	0x0	0x0	Register bit is cleared when link goes down and loaded when a base page is received Received Code Word Bit 13:12 00 = No error, link OK (default) 01 = Link Failure 10 = Offline 11 = Auto-Negotiation Error
11:9	Reserved	RO	0x0	0x0	Register bit is cleared when link goes down and loaded when a base page is received Received Code Word Bit 11:9
8:7	Asymmetric Pause	RO	0x0	0x0	Register bit is cleared when link goes down and loaded when a base page is received Received Code Word Bit 8:7 00 = No PAUSE 01 = Symmetric PAUSE 10 = Asymmetric PAUSE toward link partner 11 = Both Symmetric PAUSE and Asymmetric PAUSE toward local device.
6	1000BASE-X Half-Duplex	RO	0x0	0x0	Register bit is cleared when link goes down and loaded when a base page is received Received Code Word bit 6 1 = Link partner capable of 1000BASE-X half-duplex. 0 = Link partner not capable of 1000BASE-X half-duplex.
5	1000BASE-X Full-Duplex	RO	0x0	0x0	Register bit is cleared when link goes down and loaded when a base page is received Received Code Word bit 5 1 = Link partner capable of 1000BASE-X full-duplex. 0 = Link partner not capable of 1000BASE-X full-duplex.
4:0	Reserved	RO	0x00	0x00	Register bit is cleared when link goes down and loaded when a base page is received Received Code Word Bits 4:0 Must be 0

Table 92: Fiber Link Partner Ability Register - SGMII (System mode) (Register 16_1.1:0 = 10)
Page 1, Register 5

Bits	Field	Mode	HW Rst	SW Rst	Description
15	Reserved	RO	0x0	0x0	Must be 0
14	Acknowledge	RO	0x0	0x0	Acknowledge Register bit is cleared when link goes down and loaded when a base page is received Received Code Word Bit 14 1 = Link partner received link code word 0 = Link partner has not received link code word
13:0	Reserved	RO	0x0000	0x0000	Received Code Word Bits 13:0 Must receive 00_0000_0000_0001 per SGMII spec

Table 93: Fiber Link Partner Ability Register - SGMII (Media mode) (Register 16_1.1:0 = 11)
Page 1, Register 5

Bits	Field	Mode	HW Rst	SW Rst	Description
15	Link	RO	0x0	0x0	Register bit is cleared when link goes down and loaded when a base page is received Received Code Word Bit 15 1 = Copper Link is up on the link partner 0 = Copper Link is not up on the link partner
14	Acknowledge	RO	0x0	0x0	Register bit is cleared when link goes down and loaded when a base page is received Acknowledge Received Code Word Bit 14 1 = Link partner received link code word 0 = Link partner has not received link code word
13	Reserved	RO	0x0	0x0	Register bit is cleared when link goes down and loaded when a base page is received Received Code Word Bit 13 Must be 0
12	Duplex Status	RO	0x0	0x0	Register bit is cleared when link goes down and loaded when a base page is received Received Code Word Bit 12 1 = Copper Interface on the link Partner is capable of Full Duplex 0 = Copper Interface on the link partner is capable of Half Duplex
11:10	Speed Status	RO	0x0	0x0	Register bits are cleared when link goes down and loaded when a base page is received Received Code Word Bit 11:10 00 = 10 Mbps 01 = 100 Mbps 10 = 1000 Mbps 11 = reserved
9	Reserved	RO	0x0	0x0	Reserved
8	Reserved	RO	0x0	0x0	Reserved

Copyright © 2018 Marvell

Table 93: Fiber Link Partner Ability Register - SGMII (Media mode) (Register 16_1.1:0 = 11) (Continued)

Bits	Field	Mode	HW Rst	SW Rst	Description
7	Reserved	RO	0x0	0x0	Reserved
6:0	Reserved	RO	0x00	0x00	Register bits are cleared when link goes down and loaded when a base page is received Received Code Word Bits 6:0 Must be 0000001

Table 94: Fiber Auto-Negotiation Expansion Register
Page 1, Register 6

Bits	Field	Mode	HW Rst	SW Rst	Description
15:4	Reserved	RO	0x000	0x000	Reserved. Must be 00000000000.
3	Link Partner Next page Able	RO	0x0	0x0	SGMII and 100BASE-FX modes this bit is always 0. In 1000BASE-X mode register 6_1.3 is set when a base page is received and the received link control word has bit 15 set to 1. The bit is cleared when link goes down. 1 = Link Partner is Next Page able 0 = Link Partner is not Next Page able
2	Local Next Page Able	RO	Always 1	Always 1	1 = Local Device is Next Page able
1	Page Received	RO, LH	0x0	0x0	Register 6_1.1 is set when a valid page is received. 1 = A New Page has been received 0 = A New Page has not been received
0	Link Partner Auto-Negotiation Able	RO	0x0	0x0	This bit is set when there is sync status, the fiber receiver has received 3 non-zero matching valid configuration code groups and Auto-negotiation is enabled in register 0_1.12 1 = Link Partner is Auto-Negotiation able 0 = Link Partner is not Auto-Negotiation able

Table 95: Fiber Next Page Transmit Register
Page 1, Register 7

Bits	Field	Mode	HW Rst	SW Rst	Description
15	Next Page	R/W	0x0	0x0	A write to register 7_1 implicitly sets a variable in the Auto-Negotiation state machine indicating that the next page has been loaded. Register 7_1 only has effect in the 1000BASE-X mode. Transmit Code Word Bit 15
14	Reserved	RO	0x0	0x0	Transmit Code Word Bit 14
13	Message Page Mode	R/W	0x1	0x1	Transmit Code Word Bit 13
12	Acknowledge2	R/W	0x0	0x0	Transmit Code Word Bit 12

Table 95: Fiber Next Page Transmit Register (Continued)
Page 1, Register 7

Bits	Field	Mode	HW Rst	SW Rst	Description
11	Toggle	RO	0x0	0x0	Transmit Code Word Bit 11. This bit is internally set to the opposite value each time a page is received
10:0	Message/ Unformatted Field	R/W	0x001	0x001	Transmit Code Word Bit 10:0

Table 96: Fiber Link Partner Next Page Register
Page 1, Register 8

Bits	Field	Mode	HW Rst	SW Rst	Description
15	Next Page	RO	0x0	0x0	Register 8_1 only has effect in the 1000BASE-X mode. The register is loaded only when a next page is received from the link partner. It is cleared each time the link goes down. Received Code Word Bit 15
14	Acknowledge	RO	0x0	0x0	Received Code Word Bit 14
13	Message Page	RO	0x0	0x0	Received Code Word Bit 13
12	Acknowledge2	RO	0x0	0x0	Received Code Word Bit 12
11	Toggle	RO	0x0	0x0	Received Code Word Bit 11
10:0	Message/ Unformatted Field	RO	0x000	0x000	Received Code Word Bit 10:0

Table 97: Extended Status Register
Page 1, Register 15

Bits	Field	Mode	HW Rst	SW Rst	Description
15	1000BASE-X Full-Duplex	RO	See Descr	See Descr	If register 16_1.1:0 (MODE[1:0]) = 00 then this bit is 0, else this bit is 1. 1 = 1000BASE-X full duplex capable 0 = not 1000BASE-X full duplex capable
14	1000BASE-X Half-Duplex	RO	See Descr	See Descr	If register 16_1.1:0 (MODE[1:0]) = 00 then this bit is 0, else this bit is 1. 1 = 1000BASE-X half duplex capable 0 = not 1000BASE-X half duplex capable
13	1000BASE-T Full-Duplex	RO	0x0	0x0	0 = not 1000BASE-T full duplex capable
12	1000BASE-T Half-Duplex	RO	0x0	0x0	0 = not 1000BASE-T half duplex capable
11:0	Reserved	RO	0x000	0x000	000000000000

Copyright © 2018 Marvell

Table 98: Fiber Specific Control Register 1
Page 1, Register 16

Bits	Field	Mode	HW Rst	SW Rst	Description
15:14	Reserved	R/W	0x1	Retain	Reserved Do not write any value other than the HW Rst value.
13	Block Carrier Extension Bit	R/W	0x0	Retain	Carrier extension and carrier extension with error are converted to idle symbols on the RXD only during full duplex mode. 1 = Enable Block Carrier Extension 0 = Disable Block Carrier Extension
12	Reserved	R/W	0x0	0x0	Reserved Do not write any value other than the HW Rst value.
11	Assert CRS on Transmit	R/W	0x0	Retain	This bit has no effect in full-duplex. 1 = Assert on transmit 0 = Never assert on transmit
10	Force Link Good	R/W	0x0	Retain	If link is forced to be good, the link state machine is bypassed and the link is always up. 1 = Force link good 0 = Normal operation
9	Reserved	R/W	0x0	Retain	Set to 0.
8	SERDES Loopback Type	R/W	0x0	Retain	0 = Loopback Through PCS (Tx and Rx can be asynchronous) 1 = Loopback raw 10 bit data (Tx and Rx must be synchronous)
7:6	Reserved	R/W	0x0	Update	Reserved Do not write any value other than the HW Rst value.
5	Marvell Remote Fault Indication Enable	R/W	0x0	Retain	0 = Disable 1 = Enable, Remote Fault is indicated to link partner in less than 2 ms, only one bit of bit 5:4 can be set to 1
4	IEEE Remote Fault Indication Enable	R/W	0x0	Retain	0 = Disable 1 = Enable, Remote Fault is indicated to link partner after 20ms according to IEEE standard, only one bit of bit 5:4 can be set to 1
3	Reserved	R/W	0x1	Update	
2	Interrupt Polarity	R/W	0x1	Retain	1 = INTn active low 0 = INTn active high
1:0	MODE[1:0]	RO	See Desc.	See Desc.	These bits reflects the mode as programmed in register of 20_6.2:0 00 = 100BASE-FX 01 = 1000BASE-X 10 = SGMII System mode 11 = SGMII Media mode

Table 99: Fiber Specific Status Register
Page 1, Register 17

Bits	Field	Mode	HW Rst	SW Rst	Description
15:14	Speed	RO	0x0	Retain	These status bits are valid only after resolved bit 17_1.11 = 1. The resolved bit is set when Auto-Negotiation is completed or Auto-Negotiation is disabled. In 100BASE-FX mode this bit is always 01. 11 = Reserved 10 = 1000 Mbps 01 = 100 Mbps 00 = 10 Mbps
13	Duplex	RO	0x0	Retain	This status bit is valid only after resolved bit 17_1.11 = 1. The resolved bit is set when Auto-Negotiation is completed or Auto-Negotiation is disabled. In 100BASE-FX mode this bit follows register 0_1.8. 1 = Full-duplex 0 = Half-duplex
12	Page Received	RO, LH	0x0	0x0	In 100BASE-FX mode this bit is always 0. 1 = Page received 0 = Page not received
11	Speed and Duplex Resolved	RO	0x0	0x0	When Auto-Negotiation is not enabled or in 100BASE-FX mode this bit is always 1. 1 = Resolved 0 = Not resolved If bit 26_1.5 is 1, then this bit will be 0.
10	Link (real time)	RO	0x0	0x0	1 = Link up 0 = Link down
9:8	Reserved	RO	Always 00	Always 00	
7:6	Remote Fault Received	RO, LH	0x0	0x0	The mapping for this status is as follows: 00 = No Fault 01 = Link Failure detected at link partner 10 = Offline 11 = Auto-neg Error
5	Sync status	RO	0x0	0x0	1 = Sync 0 = No Sync
4	Fiber Energy Detect Status	RO	0x1	0x1	1 = No energy detected 0 = Energy Detected
3	Transmit Pause Enabled	RO	0x0	0x0	This is a reflection of the MAC pause resolution. This bit is for information purposes and is not used by the device. This status bit is valid only after resolved bit 17_1.11 = 1. The resolved bit is set when Auto-Negotiation is completed or Auto-Negotiation is disabled. In 100BASE-FX mode this bit is always 0. 1 = Transmit pause enabled 0 = Transmit pause disable

Copyright © 2018 Marvell

Table 99: Fiber Specific Status Register (Continued)
Page 1, Register 17

Bits	Field	Mode	HW Rst	SW Rst	Description
2	Receive Pause Enabled	RO	0x0	0x0	This is a reflection of the MAC pause resolution. This bit is for information purposes and is not used by the device. This status bit is valid only after resolved bit 17_1.11 = 1. The resolved bit is set when Auto-Negotiation is completed or Auto-Negotiation is disabled. In 100BASE-FX mode this bit is always 0. 1 = Receive pause enabled 0 = Receive pause disabled
1:0	Reserved	RO	Always 00	Always 00	00

Table 100: Fiber Interrupt Enable Register
Page 1, Register 18

Bits	Field	Mode	HW Rst	SW Rst	Description
15	Reserved	RO	Always 0	Always 0	0
14	Speed Changed Interrupt Enable	R/W	0x0	Retain	1 = Interrupt enable 0 = Interrupt disable
13	Duplex Changed Interrupt Enable	R/W	0x0	Retain	1 = Interrupt enable 0 = Interrupt disable
12	Page Received Interrupt Enable	R/W	0x0	Retain	1 = Interrupt enable 0 = Interrupt disable
11	Auto-Negotiation Completed Interrupt Enable	R/W	0x0	Retain	1 = Interrupt enable 0 = Interrupt disable
10	Link Status Changed Interrupt Enable	R/W	0x0	Retain	1 = Interrupt enable 0 = Interrupt disable
9	Symbol Error Interrupt Enable	R/W	0x0	Retain	1 = Interrupt enable 0 = Interrupt disable
8	False Carrier Interrupt Enable	R/W	0x0	Retain	1 = Interrupt enable 0 = Interrupt disable
7	Fiber FIFO Over/Underflow Interrupt Enable	R/W	0x0	Retain	1 = Interrupt enable 0 = Interrupt disable
6	Reserved	RO	Always 0	Always 0	0
5	Remote Fault Receive Interrupt Enable	R/W	0x0	0x0	1 = Interrupt enable 0 = Interrupt disable
4	Fiber Energy Detect Interrupt Enable	R/W	0x0	Retain	1 = Interrupt enable 0 = Interrupt disable

Table 100: Fiber Interrupt Enable Register (Continued)
Page 1, Register 18

Bits	Field	Mode	HW Rst	SW Rst	Description
3:0	Reserved	RO	Always 0000	Always 0000	0000

Table 101: Fiber Interrupt Status Register
Page 1, Register 19

Bits	Field	Mode	HW Rst	SW Rst	Description
15	Reserved	RO	Always 0	Always 0	0
14	Speed Changed	RO,LH	0x0	0x0	1 = Speed changed 0 = Speed not changed
13	Duplex Changed	RO,LH	0x0	0x0	1 = Duplex changed 0 = Duplex not changed
12	Page Received	RO,LH	0x0	0x0	1 = Page received 0 = Page not received
11	Auto-Negotiation Completed	RO,LH	0x0	0x0	1 = Auto-Negotiation completed 0 = Auto-Negotiation not completed
10	Link Status Changed	RO,LH	0x0	0x0	1 = Link status changed 0 = Link status not changed
9	Symbol Error	RO,LH	0x0	0x0	1 = Symbol error 0 = No symbol error
8	False Carrier	RO,LH	0x0	0x0	1 = False carrier 0 = No false carrier
7	Fiber FIFO Over/Underflow	RO,LH	0x0	0x0	1 = Over/Underflow Error 0 = No FIFO Error
6	Reserved	RO	0x0	0x0	0
5	Remote Fault Receive Interrupt Enable	RO, LH	0x0	0x0	1 = Remote Fault received changed, read 1.17.7:6 for detail 0 = No change on remote fault received
4	Fiber Energy Detect Changed	RO,LH	0x0	0x0	1 = Energy Detect state changed 0 = No Energy Detect state change detected
3:0	Reserved	RO	Always 00000	Always 00000	00000

Table 102: PRBS Control
Page 1, Register 23

Bits	Field	Mode	HW Rst	SW Rst	Description
15:8	Reserved	R/W	0x00	Retain	Set to 0s
7	Invert Checker Polarity	R/W	0x0	Retain	0 = Normal 1 = Invert

Copyright © 2018 Marvell

Table 102: PRBS Control (Continued)
Page 1, Register 23

Bits	Field	Mode	HW Rst	SW Rst	Description
6	Invert Generator Polarity	R/W	0x0	Retain	0 = Normal 1 = Invert
5	PRBS Lock	R/W	0x0	Retain	0 = Counter Free Runs 1 = Do not start counting until PRBS locks first
4	Clear Counter	R/W, SC	0x0	0x0	0 = Normal 1 = Clear Counter
3:2	Pattern Select	R/W	0x0	Retain	00 = PRBS 7 01 = PRBS 23 10 = PRBS 31 11 = Generate 1010101010... pattern
1	PRBS Checker Enable	R/W	0x0	0x0	0 = Disable 1 = Enable
0	PRBS Generator Enable	R/W	0x0	0x0	0 = Disable 1 = Enable

Table 103: PRBS Error Counter LSB
Page 1, Register 24

Bits	Field	Mode	HW Rst	SW Rst	Description
15:0	PRBS Error Count LSB	RO	0x0000	Retain	A read to this register freezes register 25_1. Cleared only when register 23_1.4 is set to 1.

Table 104: PRBS Error Counter MSB
Page 1, Register 25

Bits	Field	Mode	HW Rst	SW Rst	Description
15:0	PRBS Error Count MSB	RO	0x0000	Retain	This register does not update unless register 24_1 is read first. Cleared only when register 23_1.4 is set to 1.

Table 105: Fiber Specific Control Register 2
Page 1, Register 26

Bits	Field	Mode	HW Rst	SW Rst	Description
15	Force INT	R/W	0x0	Retain	1 = Force INTn to assert 0 = Normal Operation
14	1000BASE-X Noise Filtering	R/W	0x0	Retain	1 = Enable 0 = Disable
13:10	Reserved	R/W	0x0	Retain	Must set to 0
9	FEFI Enable	R/W	0x0	Retain	100BASE-FX FEFI 1 = Enable 0 = Disable
8:7	Reserved	R/W	0x0	Retain	Must set to 0

Table 105: Fiber Specific Control Register 2 (Continued)
Page 1, Register 26

Bits	Field	Mode	HW Rst	SW Rst	Description
6	Serial Interface Auto-Negotiation bypass enable	R/W	0x1	Update	Changes to this bit are disruptive to the normal operation; hence, any changes to these registers must be followed by software reset to take effect. 1 = Bypass Allowed 0 = No Bypass Allowed
5	Serial Interface Auto-Negotiation bypass status	RO	0x0	0x0	1 = Serial interface link came up because bypass mode timer timed out and fiber Auto-Negotiation was bypassed. 0 = Serial interface link came up because regular fiber Auto-Negotiation completed. If this bit is 1, then bit 17_1.11 will be 0.
4	Reserved	R/W	0x0	Update	Must set to 0
3	Fiber Transmitter Disable	R/W	0x0	Retain	1 = Transmitter Disable 0 = Transmitter Enable
2:0	SGMII Output Amplitude	R/W	0x2	Retain	Differential voltage peak measured. See AC/DC section for valid VOD values. 000 = 14mV 001 = 112mV 010 = 210 mV 011 = 308mV 100 = 406mV 101 = 504mV 110 = 602mV 111 = 700mV

Table 106: MAC Specific Control Register 1
Page 2, Register 16

Bits	Field	Mode	HW Rst	SW Rst	Description
15:14	Reserved	R/W	0x1	Retain	Reserved Do not write any value other than the HW Rst value.
13	Reserved	R/W	0x0	Retain	Reserved Do not write any value other than the HW Rst value.
12	Reserved	R/W	0x0	Retain	Reserved Do not write any value other than the HW Rst value.
11	Reserved	R/W	0x0	Retain	Reserved Do not write any value other than the HW Rst value.
10	Reserved	R/W	0x1	Retain	Reserved Do not write any value other than the HW Rst value.
9:7	Reserved	R/W	0x0	Retain	Reserved Do not write any value other than the HW Rst value.
6	Pass Odd Nibble Preambles	R/W	0x1	Update	0 = Pad odd nibble preambles in copper receive packets. 1 = Pass as is and do not pad odd nibble preambles in copper receive packets.

Copyright © 2018 Marvell

Table 106: MAC Specific Control Register 1 (Continued)
Page 2, Register 16

Bits	Field	Mode	HW Rst	SW Rst	Description
5	Reserved	R/W	0x0	Retain	
4	Reserved	R/W	0x0	Retain	
3	RGMII Interface Power Down	R/W	0x1	Update	Changes to this bit are disruptive to the normal operation; therefore, any changes to these registers must be followed by a software reset to take effect. This bit determines whether the RGMII RX_CLK powers down when Register 0.11, 16_0.2 are used to power down the device or when the PHY enters the energy detect state. 1 = Always power up 0 = Can power down
2	Reserved	R/W	0x0	Retain	Reserved Do not write any value other than the HW Rst value.
1	Reserved	R/W	0x0	Retain	Reserved Do not write any value other than the HW Rst value.
0	Reserved	R/W	0x0	Retain	Reserved Do not write any value other than the HW Rst value.

Table 107: MAC Specific Interrupt Enable Register
Page 2, Register 18

Bits	Field	Mode	HW Rst	SW Rst	Description
15:8	Reserved	R/W	0x00	Retain	000000000
7	Copper FIFO Over/Underflow Interrupt Enable	R/W	0x0	Retain	1 = Interrupt enable 0 = Interrupt disable
6:4	Reserved	R/W	0x0	Retain	000
3	Copper FIFO Idle Inserted Interrupt Enable	R/W	0x0	Retain	1 = Interrupt enable 0 = Interrupt disable
2	Copper FIFO Idle Deleted Interrupt Enable	R/W	0x0	Retain	1 = Interrupt enable 0 = Interrupt disable
1:0	Reserved	R/W	0x0	Retain	00

Table 108: MAC Specific Status Register
Page 2, Register 19

Bits	Field	Mode	HW Rst	SW Rst	Description
15:8	Reserved	RO	Always 00	Always 00	00000000
7	Copper FIFO Over/Underflow	RO,LH	0x0	0x0	1 = Over/Underflow Error 0 = No FIFO Error

Table 108: MAC Specific Status Register (Continued)
Page 2, Register 19

Bits	Field	Mode	HW Rst	SW Rst	Description
6:4	Reserved	RO	Always 0	Always 0	000
3	Copper FIFO Idle Inserted	RO,LH	0x0	0x0	1 = Idle Inserted 0 = No Idle Inserted
2	Copper FIFO Idle Deleted	RO,LH	0x0	0x0	1 = Idle Deleted 0 = Idle not Deleted
1:0	Reserved	RO	Always 0	Always 0	00

Table 109: MAC Specific Control Register 2
Page 2, Register 21

Bits	Field	Mode	HW Rst	SW Rst	Description
15	Reserved	R/W	0x0	0x0	0
14	Copper Line Loopback	R/W	0x0	0x0	1 = Enable Loopback of MDI to MDI 0 = Normal Operation
13	Default MAC interface speed (LSB)	R/W	0x0	Update	Changes to these bits are disruptive to the normal operation; therefore, any changes to these registers must be followed by software reset to take effect. Also, used for setting speed of MAC interface during MAC side loopback. Requires that customer set both these bits and force speed using register 0 to the same speed. MAC Interface Speed during Link down. Bits 6,13 00 = 10 Mbps 01 = 100 Mbps 10 = 1000 Mbps
12:7	Reserved		0x20	0x20	Reserved.
6	Default MAC interface speed (MSB)	R/W	0x1	Update	Changes to these bits are disruptive to the normal operation; therefore, any changes to these registers must be followed by software reset to take effect. Also, used for setting speed of MAC interface during MAC side loopback. Requires that customer set both these bits and force speed using register 0 to the same speed. MAC Interface Speed during Link down. Bits 6, 13 00 = 10 Mbps 01 = 100 Mbps 10 = 1000 Mbps
5	RGMII Receive Timing Control	R/W	0x1	Update	Changes to these bits are disruptive to the normal operation; therefore, any changes to these registers must be followed by software reset to take effect. 1 = Receive clock transition when data stable 0 = Receive clock transition when data transitions

Copyright © 2018 Marvell

Table 109: MAC Specific Control Register 2 (Continued)
Page 2, Register 21

Bits	Field	Mode	HW Rst	SW Rst	Description
4	RGMII Transmit Timing Control	R/W	0x1	Update	Changes to these bits are disruptive to the normal operation; therefore, any changes to these registers must be followed by software reset to take effect. 1 = Transmit clock internally delayed 0 = Transmit clock not internally delayed
3	Block Carrier Extension Bit	R/W	0x0	Retain	1 = Enable Block Carrier Extension 0 = Disable Block Carrier Extension
2:0	Reserved	R/W	0x6	0x6	Reserved.

Table 110: RGMII Output Impedance Calibration Override
Page 2, Register 24

Bits	Field	Mode	HW Rst	SW Rst	Description
15	Reserved	R/W, SC	0x0	Retain	Reserved Do not write any value other than the HW Rst value.
14	Reserved	RO	0x0	Retain	Reserved
13	VDDO Level	R/W	See Descr.	Retain	VDDO level- must be programmed to indicate the VDDO supply voltage used The bit mapping is: 0 = 3.3V/1.8V 1 = 2.5V/1.8V If the CONFIG pin input values bit 1:0 are: 00, then VDDO Level = 3.3V/1.8V 11, then VDDO Level = 3.3V/1.8V 10, then VDDO Level = 2.5V/1.8V 01, then VDDO Level = 2.5V/1.8V Note: 3.3V/1.8V is assumed initially until this value is changed.
12	1.8V VDDO Used	R/O	See Descr	Retain	This bit indicates whether VDDO = 1.8V is used or not. 1 = VDDO = 1.8V 0 = VDDO = 2.5V or 3.3V
11:8	Reserved	R/W	See Descr	Retain	Reserved Do not write any value other than the HW Rst value. In this case, a read must be done first to get the HW Rst value and then it should be used in a subsequent write.
7	Reserved	RW	0x0	Retain	Reserved Do not write any value other than the HW Rst value.
6	Reserved	R/W	0x0	Retain	Reserved Do not write any value other than the HW Rst value.
5:4	Reserved	R/O	0x0	Retain	Reserved

Table 110: RGMII Output Impedance Calibration Override (Continued)
Page 2, Register 24

Bits	Field	Mode	HW Rst	SW Rst	Description
3:0	Reserved	R/W	See Descr	Retain	Reserved Do not write any value other than the HW Rst value. In this case, a read must be done first to get the HW Rst value and then it should be used in a subsequent write.

Table 111: LED[2:0] Function Control Register
Page 3, Register 16

Bits	Field	Mode	HW Rst	SW Rst	Description
15:12	Reserved	R/W	0x1	Retain	
11:8	LED[2] Control	R/W	0x0	Retain	0000 = On - Link, Off - No Link 0001 = On - Link, Blink - Activity, Off - No Link 0010 = On- Full Duplex, Blink- Collision, Off- Half Duplex 0011 = On - Activity, Off - No Activity 0100 = Blink - Activity, Off - No Activity 0101 = On - Transmit, Off - No Transmit 0110 = On - 10/1000 Mbps Link, Off - Else 0111 = On - 10 Mbps Link, Off - Else 1000 = Force Off 1001 = Force On 1010 = Force Hi-Z 1011 = Force Blink 11xx = Reserved
7:4	LED[1] Control	R/W	0x1	Retain	If 16_3.3:2 is set to 11 then 16_3.7:4 has no effect 0000 = On- Receive, Off- No Receive 0001 = On - Link, Blink - Activity, Off - No Link 0010 = On - Link, Blink - Receive, Off - No Link 0011 = On - Activity, Off - No Activity 0100 = Blink - Activity, Off - No Activity 0101 = On- 100 Mbps Link/ Fiber Link 0110 = On - 100/1000 Mbps Link, Off - Else 0111 = On - 100 Mbps Link, Off - Else 1000 = Force Off 1001 = Force On 1010 = Force Hi-Z 1011 = Force Blink 11xx = Reserved

Copyright © 2018 Marvell

Table 111: LED[2:0] Function Control Register (Continued)
Page 3, Register 16

Bits	Field	Mode	HW Rst	SW Rst	Description
3:0	LED[0] Control	R/W	0xE	Retain	0000 = On - Link, Off - No Link 0001 = On - Link, Blink - Activity, Off - No Link 0010 = 3 blinks - 1000 Mbps 2 blinks - 100 Mbps 1 blink - 10 Mbps 0 blink - No Link 0011 = On - Activity, Off - No Activity 0100 = Blink - Activity, Off - No Activity 0101 = On - Transmit, Off - No Transmit 0110 = On - Copper Link, Off - Else 0111 = On - 1000 Mbps Link, Off - Else 1000 = Force Off 1001 = Force On 1010 = Force Hi-Z 1011 = Force Blink 1100 = MODE 1 (Dual LED mode) 1101 = MODE 2 (Dual LED mode) 1110 = MODE 3 (Dual LED mode) 1111 = MODE 4 (Dual LED mode)

Table 112: LED[2:0] Polarity Control Register
Page 3, Register 17

Bits	Field	Mode	HW Rst	SW Rst	Description
15:12	LED[1] mix percentage	R/W	0x4	Retain	When using 2 terminal bi-color LEDs the mixing percentage should not be set greater than 50%. 0000 = 0% 0001 = 12.5% ... 0111 = 87.5% 1000 = 100% 1001 to 1111 = Reserved
11:8	LED[0] mix percentage	R/W	0x4	Retain	When using 2 terminal bi-color LEDs the mixing percentage should not be set greater than 50%. 0000 = 0% 0001 = 12.5% ..., 0111 = 87.5%, 1000 = 100% 1001 to 1111 = Reserved
7:6	Reserved	R/W	0x0	Retain	Reserved.
5:4	LED[2] Polarity	R/W	0x0	Retain	00 = On - drive LED[2] low, Off - drive LED[2] high 01 = On - drive LED[2] high, Off - drive LED[2] low 10 = On - drive LED[2] low, Off - tristate LED[2] 11 = On - drive LED[2] high, Off - tristate LED[2]
3:2	LED[1] Polarity	R/W	0x0	Retain	00 = On - drive LED[1] low, Off - drive LED[1] high 01 = On - drive LED[1] high, Off - drive LED[1] low 10 = On - drive LED[1] low, Off - tristate LED[1] 11 = On - drive LED[1] high, Off - tristate LED[1]

Table 112: LED[2:0] Polarity Control Register (Continued)
Page 3, Register 17

Bits	Field	Mode	HW Rst	SW Rst	Description
1:0	LED[0] Polarity	R/W	0x0	Retain	00 = On - drive LED[0] low, Off - drive LED[0] high 01 = On - drive LED[0] high, Off - drive LED[0] low 10 = On - drive LED[0] low, Off - tristate LED[0] 11 = On - drive LED[0] high, Off - tristate LED[0]

Table 113: LED Timer Control Register
Page 3, Register 18

Bits	Field	Mode	HW Rst	SW Rst	Description
15	Force INT	R/W	0x0	Retain	1 = Force INTn to assert 0 = Normal Operation
14:12	Pulse stretch duration	R/W	0x4	Retain	000 = No pulse stretching 001 = 21 ms to 42ms 010 = 42 ms to 84ms 011 = 84 ms to 170ms 100 = 170 ms to 340ms 101 = 340 ms to 670ms 110 = 670 ms to 1.3s 111 = 1.3s to 2.7s
11	Interrupt Polarity	R/W	0x1	Retain	0 = INTn active high 1 = INTn active low
10:8	Blink Rate	R/W	0x1	Retain	000 = 42 ms 001 = 84 ms 010 = 170 ms 011 = 340 ms 100 = 670 ms 101 to 111 = Reserved
7	Interrupt Enable	R/W	0x0	Retain	Allows the INTn output to be brought out on LED[2]. 1 = INTn is brought out LED[2] 0 = LED[2] outputs based on current LED[2] functionality
6:4	Reserved	R/W	0x0	Retain	000
3:2	Speed Off Pulse Period	R/W	0x1	Retain	00 = 84 ms 01 = 170 ms 10 = 340 ms 11 = 670 ms
1:0	Speed On Pulse Period	R/W	0x1	Retain	00 = 84ms 01 = 170ms 10 = 340ms 11 = 670ms

Copyright © 2018 Marvell

Table 114: 1000BASE-T Pair Skew Register
Page 5, Register 20

Bits	Field	Mode	HW Rst	SW Rst	Description
15:12	Pair 7,8 (MDI[3]±)	RO	0x0	Retain	Skew = Bit value x 8n s. Value is correct to within ± 8 ns. The contents of 20_5.15:0 are valid only if Register 21_5.6 = 1
11:8	Pair 4,5 (MDI[2]±)	RO	0x0	Retain	Skew = bit value x 8 ns. Value is correct to within ± 8 ns.
7:4	Pair 3,6 (MDI[1]±)	RO	0x0	Retain	Skew = bit value x 8ns. Value is correct to within ± 8 ns.
3:0	Pair 1,2 (MDI[0]±)	RO	0x0	Retain	Skew = bit value x 8 ns. Value is correct to within ± 8ns.

Table 115: 1000BASE-T Pair Swap and Polarity
Page 5, Register 21

Bits	Field	Mode	HW Rst	SW Rst	Description
15:7	Reserved	RO	0x000	Retain	
6	Register 20_5 and 21_5 valid	RO	0x0	Retain	The contents of 21_5.5:0 and 20_5.15:0 are valid only if Register 21_5.6 = 1 1= Valid 0 = Invalid
5	C, D Crossover	RO	0x0	Retain	1 = Channel C received on MDI[2]± Channel D received on MDI[3]± 0 = Channel D received on MDI[2]± Channel C received on MDI[3]±
4	A, B Crossover	RO	0x0	Retain	1 = Channel A received on MDI[0]± Channel B received on MDI[1]± 0 = Channel B received on MDI[0]± Channel A received on MDI[1]±
3	Pair 7,8 (MDI[3]±) Polarity	RO	0x0	Retain	1 = Negative 0 = Positive
2	Pair 4,5 (MDI[2]±) Polarity		0x0	Retain	1 = Negative 0 = Positive
1	Pair 3,6 (MDI[1]±) Polarity	RO	0x0	Retain	1 = Negative 0 = Positive
0	Pair 1,2 (MDI[0]±) Polarity	RO	0x0	Retain	1 = Negative 0 = Positive

Table 116: Copper Port Packet Generation
Page 6, Register 16

Bits	Field	Mode	HW Rst	SW Rst	Description
15:8	Packet Burst	R/W	0x00	Retain	0x00 = Continuous 0x01 to 0xFF = Burst 1 to 255 packets

Table 116: Copper Port Packet Generation (Continued)
Page 6, Register 16

Bits	Field	Mode	HW Rst	SW Rst	Description
7	Packet Generator Transmit Trigger	R/W	0x0	Retain	This bit is only valid when all of the following are true: bit 6 =1 bit3 =1 bit15:8 is not equal to all 0s A read of this bit gives the following: 1: Packet generator transmit done 0: Packet generator is transmitting data When this bit is 1 a write of 0 will trigger the packet generator to transmit again. When this bit is 0 a write of 0 or 1 will have no effect.
6	Packet Generator Enable Self Clear Control	R/W	0x0	Retain	0 = Bit 3 will self clear after all packets are sent 1 = Bit 3 will stay high after all packets are sent
5	Reserved	R/W	0x0	Retain	Reserved
4	Enable CRC Checker	R/W	0x0	Retain	1 = Enable 0 = Disable
3	Enable Packet Generator	R/W	0x0	Retain	1 = Enable 0 = Disable
2	Payload of Packet to Transmit	R/W	0x0	Retain	0 = Pseudo-random 1 = 5A,A5,5A,A5,...
1	Length of Packet to Transmit	R/W	0x0	Retain	1 = 1518 bytes 0 = 64 bytes
0	Transmit an Errored Packet	R/W	0x0	Retain	1 = Tx packets with CRC errors & Symbol Error 0 = No error

Table 117: Copper Port CRC Counters
Page 6, Register 17

Bits	Field	Mode	HW Rst	SW Rst	Description
15:8	Packet Count	RO	0x00	Retain	0x00 = No packets received 0xFF = 256 packets received (max count). Bit 16_6.4 must be set to 1 in order for register to be valid.
7:0	CRC Error Count	RO	0x00	Retain	0x00 = No CRC errors detected in the packets received. 0xFF = 256 CRC errors detected in the packets received (max count). Bit 16_6.4 must be set to 1 in order for register to be valid.

Table 118: Checker Control
Page 6, Register 18

Bits	Field	Mode	HW Rst	SW Rst	Description
15:5	Reserved	R/W	0x000	Retain	Set to 0s

Copyright © 2018 Marvell

Table 118: Checker Control (Continued)
Page 6, Register 18

Bits	Field	Mode	HW Rst	SW Rst	Description
4	CRC Counter Reset	R/W, SC	0x0	Retain	1 = Reset This bit will self-clear after writing 1.
3	Enable Stub Test	R	0x0	Retain	1 = Enable stub test 0 = Normal Operation
2:0	Reserved	R/W	0x0	Retain	Reserved.

Table 119: Copper Port Packet Generation
Page 6, Register 19

Bits	Field	Mode	HW Rst	SW Rst	Description
15:8	Reserved	R/W	0x00	Retain	Reserved.
7:0	IPG Length	R/W	8'd12	Retain	The number in bit [7:0]+1 is the number of bytes for IPG

Table 120: Late Collision Counters 1 & 2
Page 6, Register 23

Bits	Field	Mode	HW Rst	SW Rst	Description
15:8	Late Collision 97-128 bytes	RO, SC	0x00	Retain	This counter increments by 1 when the PHY is in half duplex and a start of packet is received while the 97th to 128th bytes of the packet are transmitted. The measurement is done at the internal GMII interface. The counter will not roll over and will clear on read.
7:0	Late Collision 65-96 bytes	RO, SC	0x00	Retain	This counter increments by 1 when the PHY is in half duplex and a start of packet is received while the 65th to 96th bytes of the packet are transmitted. The measurement is done at the internal GMII interface. The counter will not roll over and will clear on read.

Table 121: Late Collision Counters 3 & 4
Page 6, Register 24

Bits	Field	Mode	HW Rst	SW Rst	Description
15:8	Late Collision >192 bytes	RO, SC	0x00	Retain	This counter increments by 1 when the PHY is in half duplex and a start of packet is received after 192 bytes of the packet are transmitted. The measurement is done at the internal GMII interface. The counter will not roll over and will clear on read.
7:0	Late Collision 129-192 bytes	RO, SC	0x00	Retain	This counter increments by 1 when the PHY is in half duplex and a start of packet is received while the 129th to 192nd bytes of the packet are transmitted. The measurement is done at the internal GMII interface. The counter will not roll over and will clear on read.

Copyright © 2018 Marvell

Table 122: Late Collision Window Adjust/Link Disconnect
Page 6, Register 25

Bits	Field	Mode	HW Rst	SW Rst	Description
15:13	Reserved	R/W	0x0	Retain	Set to 0s
12:8	Late Collision Window Adjust	R/W	0x00	Retain	Number of bytes to advance in late collision window. 0 = start at 64th byte, 1 = start at 63rd byte, etc.
7:0	Reserved	R/W	0x00	Retain	Set to 0s

Table 123: Misc Test
Page 6, Register 26

Bits	Field	Mode	HW Rst	SW Rst	Description
15	Reserved	R/W	0x0	Retain	Reserved Do not write any value other than the HW Rst value.
14:13	Temperature Sensor Acceleration	R/W	0x0	Retain	00 = Sample once per second 01 = Sample once per 10ms 1x = Disable Polling
12:8	Temperature Threshold	R/W	0x19	Retain	Temperature in C = 5 x 26_6.4:0 - 25 i.e. for 100C the value is 11001
7	Temperature Sensor Interrupt Enable	R/W	0x0	Retain	1 = Interrupt Enable 0 = Interrupt Disable
6	Temperature Sensor Interrupt	RO, LH	0x0	Retain	1 = Temperature Reached Threshold 0 = Temperature Below Threshold
5	Temperature Manual Control	R/W	0x0	Retain	Manual Control of temp_sense_en 1 = Temperature Acquire 0 = Temperature Read Set register 250_8.5:4 = 10 to use
4:0	Temperature Sensor	RO	xxxxx	xxxxx	Temperature is the 5MSBs of temperature value - Temp_val[5:1]

Table 124: Misc Test: Temperature Sensor Alternative Reading
Page 6, Register 27

Bits	Field	Mode	HW Rst	SW Rst	Description
15:13	Reserved	R/W	0x0	Retain	Reserved.
12:11	Temp Sensor: Number to average samples	R/W	2'b01	Retain	00: average over 2^9 samples 01: average over 2^11 samples 10: average over 2^13 samples 11: average over 2^15 samples

Copyright © 2018 Marvell

Table 124: Misc Test: Temperature Sensor Alternative Reading (Continued)
Page 6, Register 27

Bits	Field	Mode	HW Rst	SW Rst	Description
10:8	Temp Sensor: sampling rate	R/W	3'b100	Retain	Sampling rate 000: 28 us 001: 56 us 010: 168 us 011: 280 us 100: 816 us 101: 2.28 ms 110: 6.22 ms 111: 11.79 ms
7:0	Temperature Sensor Alternative reading	RO	xxxxx	Retain	Temperature in C = 1 x 27_6.7:0 - 25 i.e. for 100C the value is 0111_1101

Table 125: Packet Generation
Page 18, Register 16

Bits	Field	Mode	HW Rst	SW Rst	Description
15:8	Packet Burst	R/W	0x00	Retain	0x00 = Continuous 0x01 to 0xFF = Burst 1 to 255 packets
7:5	Enable Packet Generator	R/W, SC	0x0	Retain	000 = Normal Operation 010 = Generate Packets on Copper Interface 100 = Generate Packets on SGMII Interface 101 = Reserved 110 = Generate Packets on RGMII Interface 111 = Reserved else = Reserved
4	Packet Generator Transmit Trigger	R/W	0x0	Retain	This bit is only valid when all of the following are true: bit 7:5 are not equal to 000 bit3 =1 bit15:8 is not equal to all 0s A read of this bit gives the following: 1: Packet generator transmit done 0: Packet generator is transmitting data When this bit is 1 a write of 0 will trigger the packet generator to transmit again. When this bit is 0 a write of 0 or 1 will have no effect.
3	Packet Generator Enable Self Clear Control	R/W	0x0	Retain	0 = Bit 7:5 will self clear after all packets are sent 1 = Bit 7:5 will stay at the current value after all packets are sent
2	Payload of packet to transmit	R/W	0x0	Retain	0 = Pseudo-random 1 = 5A,A5,5A,A5,...
1	Length of packet to transmit	R/W	0x0	Retain	1 = 1518 bytes 0 = 64 bytes

Table 125: Packet Generation (Continued)
Page 18, Register 16

Bits	Field	Mode	HW Rst	SW Rst	Description
0	Transmit an Errored packet	R/W	0x0	Retain	1 = Tx packets with CRC errors & Symbol Error 0 = No error

Table 126: CRC Counters
Page 18, Register 17

Bits	Field	Mode	HW Rst	SW Rst	Description
15:8	Packet Count	RO	0x00	Retain	0x00 = No packets received 0xFF = 256 packets received (max count). Bit 18_18.2:0. must not be all 0 in order for these bits to be valid.
7:0	CRC Error Count	RO	0x00	Retain	0x00 = No CRC errors detected in the packets received 0xFF = 256 CRC errors detected in the packets received (max count) Bit 18_18.2:0. must not be all 0 in order for these bits to be valid.

Table 127: Checker Control
Page 18, Register 18

Bits	Field	Mode	HW Rst	SW Rst	Description
15:5	Reserved	R/W	0x000	Retain	Set to 0s
4	CRC Counter Reset	R/W, SC	0x0	Retain	1 = Reset This bit will self-clear after writing 1.
3	Reserved	R/W	0x0	Retain	Reserved.
2:0	Enable CRC Checker	R/W	0x0	Retain	000 = Disable/reset CRC checker 010 = Check data from Copper Interface 100 = Check data from SGMII Interface 101 = Reserved 110 = Check data from RGMII Interface 111 = Reserved else = Reserved

Table 128: Packet Generation
Page 18, Register 19

Bits	Field	Mode	HW Rst	SW Rst	Description
15:8	Reserved	R/W	0x00	Retain	Reserved.
7:0	IPG Length	R/W	0xC	Retain	The number in bit 7:0+1 is the number of bytes for IPG

Copyright © 2018 Marvell

Table 129: General Control Register 1
Page 18, Register 20

Bits	Field	Mode	HW Rst	SW Rst	Description
15	Reset	R/W, SC	0x0	SC	Mode Software Reset. Affects page 6 and 18 Writing a 1 to this bit causes the main PHY state machines to be reset. When the reset operation is done, this bit is cleared to 0 automatically. The reset occurs immediately. 1 = PHY reset 0 = Normal operation
14:13	Reserved	R/W	0x0	Retain	Set to 0s.
12:10	Reserved	R/W	0x0	Retain	Reserved for future use.
9:7	Reserved	R/W	0x4	Retain	Set to 100
6	Reserved	R/W	0x0	Retain	Reserved Do not write any value other than the HW Rst value.
5:4	Reserved	R/W	0x0	Retain	Reserved Do not write any value other than the HW Rst value.
3	Reserved	R/W	0x0	Update	Set to 0
2:0	MODE[2:0]	R/W	See Descr.	Update	Changes to this bit are disruptive to the normal operation; therefore, any changes to these registers must be followed by a software reset to take effect. 000 = RGMII (System mode) to Copper 001 = SGMII (System mode) to Copper 010 = RGMII (System mode) to 1000BASE-X 011 = RGMII (System mode) to 100BASE-FX 100 = RGMII (System mode) to SGMII (Media mode) 101 = Reserved 110 = Reserved 111 = Reserved 20_18.2:0 defaults to 111 for 88E1512/88E1514. Therefore, 20_18.2:0 must be programmed with the desired mode of operation. 20_18.2:0 defaults to 000 for 88E1510/88E1518.

4 Electrical Specifications

This section includes information on the following topics:

- Section 4.1, Absolute Maximum Ratings
- Section 4.2, Recommended Operating Conditions
- Section 4.3, Package Thermal Information
- Section 4.4, 88E1510/88E1518 Current Consumption
- Section 4.5, 88E1512 Current Consumption
- Section 4.6, 88E1514 Current Consumption
- Section 4.7, DC Operating Conditions
- Section 4.8, AC Electrical Specifications
- Section 4.9, SGMII Timing
- Section 4.10, RGMII Timing
- Section 4.11, MDC/MDIO Timing
- Section 4.12, IEEE AC Transceiver Parameters
- Section 4.13, Latency Timing

4.1 Absolute Maximum Ratings

Table 130: Absolute Maximum Ratings

Stresses above those listed in Absolute Maximum Ratings may cause permanent device failure. Functionality at or above these limits is not implied. Exposure to absolute maximum ratings for extended periods may affect device reliability.

Symbol	Parameter	Min	Typ	Max	Units
V_{DDA}	Power Supply Voltage on AVDD18 with respect to VSS	-0.5		2.5	V
V_{DDAC}	Power Supply Voltage on AVDDC18 with respect to VSS	-0.5		2.5	V
V_{DDAR}	Power Supply Voltage on AVDD33 with respect to VSS	-0.5		3.6	V
V_{DD}	Power Supply Voltage on DVDD with respect to VSS	-0.5		1.5	V
V_{DDO}	Power Supply Voltage on VDDO with respect to VSS	-0.5		3.6	V
V_{PIN}	Voltage applied to any digital input pin	-0.5		3.6V or VDDO + 0.7 whichever is less	V
$T_{STORAGE}$	Storage temperature	-55		+125[1]	°C

1. 125 °C is only used as bake temperature for not more than 24 hours. Long term storage (e.g weeks or longer) should be kept at 85 °C or lower.

Copyright © 2018 Marvell

4.2 Recommended Operating Conditions

Table 131: Recommended Operating Conditions

Symbol	Parameter	Condition	Min	Typ	Max	Units
V_{DDA}[1]	AVDD18 supply	For AVDD18	1.71	1.8	1.890	V
V_{DDAC}[1]	AVDDC18 supply	For AVDDC18	1.71	1.8	1.890	V
V_{DDAR}[1]	AVDD33 supply	For AVDD33	3.14	3.3	3.46	V
V_{DD}[1]	DVDD supply	For DVDD	0.95	1.0	1.05	V
V_{DDO}[1]	VDDO supply	For VDDO at 1.8V (88E1518/88E1512/88E1514)	1.71	1.8	1.890	V
		For VDDO at 2.5V	2.38	2.5	2.62	V
		For VDDO at 3.3V	3.14	3.3	3.46	V
RSET	Internal bias reference	Resistor connected to V_{SS}		4990 ± 1% Tolerance		Ω
T_A	Ambient operating temperature	Commercial Grade	0		70[2]	°C
		Industrial Grade	-40		+85	°C
T_J	Maximum junction temperature				125[3]	°C

1. Maximum noise allowed on supplies is 50 mV peak-peak.
2. Commercial operating temperatures are typically below 70 °C, e.g, 45 °C ~55 °C. The 70°C max is Marvell® specification limit
3. Refer to white paper on TJ Thermal Calculations for more information.

4.3 Package Thermal Information

4.3.1 Thermal Conditions for 88E1510/88E1518 48-pin, QFN Package

Table 132: Thermal Conditions for 88E1510/88E151848-pin, QFN Package

Symbol	Parameter	Condition	Min	Typ	Max	Units
θ_{JA}	Thermal resistance[1] - junction to ambient for the device 48-Pin, QFN package $\theta_{JA} = (T_J - T_A)/ P$ P = Total power dissipation	JEDEC 3 in. x 4.5 in. 4-layer PCB with no air flow		35.2		°C/W
		JEDEC 3 in. x 4.5 in. 4-layer PCB with 1 meter/sec air flow		30.5		°C/W
		JEDEC 3 in. x 4.5 in. 4-layer PCB with 2 meter/sec air flow		29.3		°C/W
		JEDEC 3 in. x 4.5 in. 4-layer PCB with 3 meter/sec air flow		28.4		°C/W
ψ_{JT}	Thermal characteristic parameter[a] - junction to top center of the device 48-Pin, QFN package $\psi_{JT} = (T_J - T_{top})/P$. P = Total power dissipation, T_{top}: Temperature on the top center of the package.	JEDEC 3 in. x 4.5 in. 4-layer PCB with no air flow		0.63		°C/W
		JEDEC 3 in. x 4.5 in. 4-layer PCB with 1 meter/sec air flow		1.07		°C/W
		JEDEC 3 in. x 4.5 in. 4-layer PCB with 2 meter/sec air flow		1.36		°C/W
		JEDEC 3 in. x 4.5 in. 4-layer PCB with 3 meter/sec air flow		1.52		°C/W
θ_{JC}	Thermal resistance[1] - junction to case for the device 48-Pin, QFN package $\theta_{JC} = (T_J - T_C)/ P_{top}$ P_{top} = Power dissipation from the top of the package	JEDEC with no air flow		18.6		°C/W
θ_{JB}	Thermal resistance[1] - junction to board for the device 48-Pin, QFN package $\theta_{JB} = (T_J - T_B)/ P_{bottom}$ P_{bottom} = Power dissipation from the bottom of the package to the PCB surface.	JEDEC with no air flow		22.7		°C/W

1. Refer to white paper on TJ Thermal Calculations for more information.

Copyright © 2018 Marvell

4.3.2 Thermal Conditions for 88E1512/88E1514 56-pin, QFN Package

Table 133: Thermal Conditions for 88E1512/88E1514 56-pin, QFN Package

Symbol	Parameter	Condition	Min	Typ	Max	Units
θ_{JA}	Thermal resistance[1] - junction to ambient for the device 56-Pin QFN package $\theta_{JA} = (T_J - T_A)/ P$ P = Total power dissipation	JEDEC 3 in. x 4.5 in. 4-layer PCB with no air flow		33.1		°C/W
		JEDEC 3 in. x 4.5 in. 4-layer PCB with 1 meter/sec air flow		28.7		°C/W
		JEDEC 3 in. x 4.5 in. 4-layer PCB with 2 meter/sec air flow		27.6		°C/W
		JEDEC 3 in. x 4.5 in. 4-layer PCB with 3 meter/sec air flow		26.7		°C/W
ψ_{JT}	Thermal characteristic parameter[a] - junction to top center of the device 56-Pin QFN package $\psi_{JT} = (T_J - T_{top})/P$. P = Total power dissipation T_{top}: Temperature on the top center of the package.	JEDEC 3 in. x 4.5 in. 4-layer PCB with no air flow		0.54		°C/W
		JEDEC 3 in. x 4.5 in. 4-layer PCB with 1 meter/sec air flow		0.92		°C/W
		JEDEC 3 in. x 4.5 in. 4-layer PCB with 2 meter/sec air flow		1.17		°C/W
		JEDEC 3 in. x 4.5 in. 4-layer PCB with 3 meter/sec air flow		1.31		°C/W
θ_{JC}	Thermal resistance[1] - junction to case for the device 56-Pin QFN package $\theta_{JC} = (T_J - T_C)/ P_{top}$ P_{top} = Power dissipation from the top of the package	JEDEC with no air flow		17.8		°C/W
θ_{JB}	Thermal resistance[1] - junction to board for the device 56-Pin QFN package $\theta_{JB} = (T_J - T_B)/ P_{bottom}$ P_{bottom} = Power dissipation from the bottom of the package to the PCB surface.	JEDEC with no air flow		20.7		°C/W

1. Refer to white paper on TJ Thermal Calculations for more information.

4.4 88E1510/88E1518 Current Consumption

4.4.1 Current Consumption when using External Regulators

Note The following current consumption numbers are shown when external supplies are used. If internal regulators are used, the current consumption will not change; however, the power consumed inside the package will increase. Care must be exercised when calculating the total current drawn on a rail when internal regulators are used. If the 1.0V and 1.8V internal regulators are used, the 1.0V and 1.8V current must be multiplied by 3.3V for power consumption calculation.

Table 134: Current Consumption AVDD18 + AVDDC18
(Over full range of values listed in the Recommended Operating Conditions unless otherwise specified)

Symbol	Parameter	Pins	Condition	Min	Typ	Max	Units
I_{AVDD}	1.8V Power to analog core	AVDD18	RGMII over 1000BASE-T with traffic		63		mA
			RGMII over 100BASE-TX with traffic		25		mA
			RGMII over 10BASE-T with traffic		17		mA
			Energy Detect		10		mA
			IEEE Power Down		4		mA

Table 135: Current Consumption AVDD33[1]
(Over full range of values listed in the Recommended Operating Conditions unless otherwise specified)

Symbol	Parameter	Pins	Condition	Min	Typ	Max	Units
I_{AVDDR}	Analog 3.3V supply	AVDD33	RGMII over 1000BASE-T with traffic		50		mA
			RGMII over 100BASE-TX with traffic		12		mA
			RGMII over 10BASE-T with traffic		30		mA
			Energy Detect		2		mA
			IEEE Power Down		1		mA

1. AVDD33 current shown assumes no internal regulator are used.

Table 136: Current Consumption DVDD
(Over full range of values listed in the Recommended Operating Conditions unless otherwise specified)

Symbol	Parameter	Pins	Condition	Min	Typ	Max	Units
I_{VDD}	1.0V Power to digital core	DVDD	RGMII over 1000BASE-T with traffic		72		mA
			RGMII over 100BASE-TX with traffic		14		mA
			RGMII over 10BASE-T with traffic		9		mA
			Energy Detect		7		mA
			IEEE Power Down		7		mA

Copyright © 2018 Marvell

Table 137: Current Consumption VDDO
(Over full range of values listed in the Recommended Operating Conditions unless otherwise specified)

Symbol	Parameter	Pins	Condition		Min	Typ	Max	Units
I_{VDDO}	Power to the digital I/Os	VDDO	RGMII over 1000BASE-T with traffic	VDDO = 3.3V		45		mA
				VDDO = 2.5V		36		mA
				VDDO = 1.8V		27		mA
			RGMII over 100BASE-TX with traffic	VDDO = 3.3V		14		mA
				VDDO = 2.5V		10		mA
				VDDO = 1.8V		8		mA
			RGMII over 10BASE-T with traffic	VDDO = 3.3V		9		mA
				VDDO = 2.5V		7		mA
				VDDO = 1.8V		6		mA
			Energy Detect	VDDO = 3.3V		9		mA
				VDDO = 2.5V		7		mA
				VDDO = 1.8V		6		mA
			IEEE Power Down	VDDO = 3.3V		9		mA
				VDDO = 2.5V		7		mA
				VDDO = 1.8V		6		mA

4.4.2 Current Consumption when using Internal Regulators

Table 138: Current Consumption REG_IN
(Over full range of values listed in the Recommended Operating Conditions unless otherwise specified)

Symbol	Parameter	Pins	Condition	Min	Typ	Max	Units
I_{REG_IN}	3.3V Internal Regulator Supply	REG_IN	RGMII over 1000BASE-T with traffic		80		mA
			RGMII over 100BASE-TX with traffic		32		mA
			RGMII over 10BASE-T with traffic		22		mA
			Energy Detect		25		mA
			IEEE Power Down		13		mA

Note

See Section 2.21, Regulators and Power Supplies, on page 68 for more details on internal regulator usage.

4.5 88E1512 Current Consumption

Note The following current consumption numbers are shown when external supplies are used. If internal regulators are used, the current consumption will not change; however, the power consumed inside the package will increase. Care must be exercised when calculating the total current drawn on a rail when internal regulators are used. If the 1.0V and 1.8V internal regulators are used, the 1.0V and 1.8V current must be multiplied by 3.3V for power consumption calculation.

4.5.1 Current Consumption when using External Regulators

Table 139: Current Consumption AVDD18 + AVDDC18
(Over full range of values listed in the Recommended Operating Conditions unless otherwise specified)

Symbol	Parameter	Pins	Condition	Min	Typ	Max	Units
I_{AVDD}	1.8V Power to analog core	AVDD18	SGMII over 1000BASE-T with traffic		84		mA
			SGMII over 100BASE-TX with traffic		49		mA
			SGMII over 10BASE-T with traffic		35		mA
			RGMII to SGMII over 1000BASE-T with traffic		25		mA
			RGMII to SGMII over 100BASE-TX with traffic		25		mA
			RGMII to SGMII over 10BASE-T with traffic		25		mA
			Energy Detect		10		mA
			IEEE Power Down		4		mA

Table 140: Current Consumption AVDD33[1]
(Over full range of values listed in the Recommended Operating Conditions unless otherwise specified)

Symbol	Parameter	Pins	Condition	Min	Typ	Max	Units
I_{AVDDR}	Analog 3.3V supply	AVDD33	SGMII over 1000BASE-T with traffic		52		mA
			SGMII over 100BASE-TX with traffic		13		mA
			SGMII over 10BASE-T with traffic		26		mA
			RGMII to SGMII over 1000BASE-T with traffic		0		mA
			RGMII to SGMII over 100BASE-TX with traffic		0		mA
			RGMII to SGMII over 10BASE-T with traffic		0		mA
			Energy Detect		2		mA
			IEEE Power Down		1		mA

1. AVDD33 current shown assumes no internal regulator are used.

Copyright © 2018 Marvell

Table 141: Current Consumption DVDD

(Over full range of values listed in the Recommended Operating Conditions unless otherwise specified)

Symbol	Parameter	Pins	Condition	Min	Typ	Max	Units
I_{VDD}	1.0V Power to digital core	DVDD	SGMII over 1000BASE-T with traffic		73		mA
			SGMII over 100BASE-TX with traffic		16		mA
			SGMII over 10BASE-T with traffic		9		mA
			RGMII to SGMII over 1000BASE-T with traffic		14		mA
			RGMII to SGMII over 100BASE-TX with traffic		11		mA
			RGMII to SGMII over 10BASE-T with traffic		10		mA
			Energy Detect		7		mA
			IEEE Power Down		7		mA

Table 142: Current Consumption VDDO

(Over full range of values listed in the Recommended Operating Conditions unless otherwise specified)

Symbol	Parameter	Pins	Condition		Min	Typ	Max	Units
I_{VDDO}	Power to the digital I/Os	VDDO	SGMII over 1000BASE-T with traffic	VDDO = 3.3V		4		mA
			SGMII over 100BASE-TX with traffic	VDDO = 2.5V		4		mA
			SGMII over 10BASE-T with traffic	VDDO = 1.8V		4		mA
			RGMII to SGMII over 1000BASE-T with traffic	VDDO = 3.3V		44		mA
				VDDO = 2.5V		36		mA
				VDDO = 1.8V		27		mA
			RGMII to SGMII over 100BASE-TX with traffic	VDDO = 3.3V		12		mA
				VDDO = 2.5V		10		mA
				VDDO = 1.8V		9		mA
			RGMII to SGMII over 10BASE-T with traffic	VDDO = 3.3V		7		mA
				VDDO = 2.5V		7		mA
				VDDO = 1.8V		7		mA
			Energy Detect	VDDO = 3.3V		9		mA
				VDDO = 2.5V		7		mA
				VDDO = 1.8V		6		mA
			IEEE Power Down	VDDO = 3.3V		9		mA
				VDDO = 2.5V		7		mA
				VDDO = 1.8V		6		mA

Copyright © 2018 Marvell

4.5.2 Current Consumption when using Internal Regulators

Table 143: Current Consumption REG_IN
(Over full range of values listed in the Recommended Operating Conditions unless otherwise specified)

Symbol	Parameter	Pins	Condition	Min	Typ	Max	Units
I_{REG_IN}	3.3V Internal Regulator Supply	REG_IN	RGMII over 1000BASE-T with traffic		80		mA
			RGMII over 100BASE-TX with traffic		32		mA
			RGMII over 10BASE-T with traffic		22		mA
I_{REG_IN}	3.3V Internal Regulator Supply	REG_IN	SGMII over 1000BASE-T with traffic		92		mA
			SGMII over 100BASE-TX with traffic		53		mA
			SGMII over 10BASE-T with traffic		43		mA
			RGMII over 1000BASE-X		28		mA
			RGMII over SGMII at 1000 Mbps		28		mA
			RGMII over SGMII at 100 Mbps		27		mA
			RGMII over SGMII at 10 Mbps		26		mA
			Energy Detect		25		mA
			IEEE Power Down		13		mA

Note

See Section 2.21, Regulators and Power Supplies, on page 68 for more details on internal regulator usage.

Copyright © 2018 Marvell

4.6 88E1514 Current Consumption

4.6.1 Current Consumption when using External Regulators

Table 144: Current Consumption AVDD18 + AVDDC18
(Over full range of values listed in the Recommended Operating Conditions unless otherwise specified)

Symbol	Parameter	Pins	Condition	Min	Typ	Max	Units
I_{AVDD}	1.8V Power to analog core	AVDD18, AVDDC18	SGMII over 1000BASE-T with traffic		88		mA
			SGMII over 100BASE-TX with traffic		51		mA
			SGMII over 10BASE-T with traffic		41		mA
			Energy Detect		10		mA
			IEEE Power Down		4		mA

Table 145: Current Consumption AVDD33
(Over full range of values listed in the Recommended Operating Conditions unless otherwise specified)

Symbol	Parameter	Pins	Condition	Min	Typ	Max	Units
I_{AVDDR}	Analog 3.3V supply	AVDD33	SGMII over 1000BASE-T with traffic		58		mA
			SGMII over 100BASE-TX with traffic		16		mA
			SGMII over 10BASE-T with traffic		32		mA
			Energy Detect		2		mA
			IEEE Power Down		1		mA

Table 146: Current Consumption DVDD
(Over full range of values listed in the Recommended Operating Conditions unless otherwise specified)

Symbol	Parameter	Pins	Condition	Min	Typ	Max	Units
I_{VDD}	1.0V Power to digital core	DVDD	SGMII over 1000BASE-T with traffic		90		mA
			SGMII over 100BASE-TX with traffic		21		mA
			SGMII over 10BASE-T with traffic		11		mA
			Energy Detect		7		mA
			IEEE Power Down		7		mA

Table 147: Current Consumption VDDO
(Over full range of values listed in the Recommended Operating Conditions unless otherwise specified)

Symbol	Parameter	Pins	Condition		Min	Typ	Max	Units
I_{VDDO}	Power to the digital I/Os	VDDO	SGMII over 1000BASE-T with traffic	VDDO = 3.3V		6		mA
			SGMII over 100BASE-TX with traffic	VDDO = 2.5V		6		mA
			SGMII over 10BASE-T with traffic	VDDO = 1.8V		6		mA
			Energy Detect	VDDO = 3.3V		6		mA
				VDDO = 2.5V		6		mA
				VDDO = 1.8V		6		mA
			IEEE Power Down	VDDO = 3.3V		6		mA
				VDDO = 2.5V		6		mA
				VDDO = 1.8V		6		mA

4.6.2 Current Consumption when using Internal Regulators

Table 148: Current Consumption REG_IN
(Over full range of values listed in the Recommended Operating Conditions unless otherwise specified)

Symbol	Parameter	Pins	Condition	Min	Typ	Max	Units
I_{REG_IN}	3.3V Internal Regulator Supply	REG_IN	SGMII over 1000BASE-T with traffic		92		mA
			SGMII over 100BASE-TX with traffic		53		mA
			SGMII over 10BASE-T with traffic		43		mA
			Energy Detect		25		mA
			IEEE Power Down		13		mA

Note

See Section 2.21, Regulators and Power Supplies, on page 68 for more details on internal regulator usage.

Copyright © 2018 Marvell

4.7 DC Operating Conditions

4.7.1 Digital Pins

Table 149: Digital Pins

(Over full range of values listed in the Recommended Operating Conditions unless otherwise specified)

Symbol	Parameter	Pins[1]	Condition	Min	Typ	Max	Units
VIH	Input high voltage	All digital inputs	VDDO = 3.3V	2.0			V
			VDDO = 2.5V	1.75			V
			VDDO = 1.8V	1.26		VDDO+0.6V	V
VIL	Input low voltage	All digital inputs	VDDO = 3.3V			0.8	V
			VDDO = 2.5V			0.75	V
			VDDO = 1.8V (88E1518/ 88E1512/ 88E1514)	-0.3		0.54	V
VOH	High level output voltage	All digital outputs		VDDO - 0.4V			V
VOL	Low level output voltage	All digital outputs				0.4	V
I_{ILK}	Input leakage current					10	uA
C_{IN}	Input capacitance	All pins				5	pF

1. VDDO supplies the CLK125, MDC, MDIO, RESETn, LED[2:0], CONFIG, TX_CLK, TX_CTRL, TXD[3:0], RX_CLK, RX_CTRL, and RXD[3:0].

4.7.2 IEEE DC Transceiver Parameters

Table 150: IEEE DC Transceiver Parameters

IEEE tests are typically based on template and cannot simply be specified by a number. For an exact description of the template and the test conditions, refer to the IEEE specifications.
-10BASE-T IEEE 802.3 Clause 14
-100BASE-TX ANSI X3.263-1995

(Over full range of values listed in the Recommended Operating Conditions unless otherwise specified)

Symbol	Parameter	Pins	Condition	Min	Typ	Max	Units
V_{ODIFF}	Absolute peak differential output voltage	MDIP/N[1:0]	10BASE-T no cable	2.2	2.5	2.8	V
		MDIP/N[1:0]	10BASE-T cable model	585[1]			mV
		MDIP/N[1:0]	100BASE-TX mode	0.950	1.0	1.050	V
		MDIP/N[3:0]	1000BASE-T[2]	0.67	0.75	0.82	V
	Overshoot[2]	MDIP/N[:0]	100BASE-TX mode	0		5%	V
	Amplitude Symmetry (positive/negative)	MDIP/N[1:0]	100BASE-TX mode	0.98x		1.02x	V+/V-
V_{IDIFF}	Peak Differential Input Voltage	MDIP/N[1:0]	10BASE-T mode	585[3]			mV
	Signal Detect Assertion	MDIP/N[1:0]	100BASE-TX mode	1000	460[4]		mV peak-peak
	Signal Detect De-assertion	MDIP/N[1:0]	100BASE-TX mode	200	360[5]		mV peak-peak

1. IEEE 802.3 Clause 14, Figure 14.9 shows the template for the “far end” wave form. This template allows as little as 495 mV peak differential voltage at the far end receiver.
2. IEEE 802.3ab Figure 40 -19 points A&B.
3. The input test is actually a template test; IEEE 802.3 Clause 14, Figure 14.17 shows the template for the receive wave form.
4. The ANSI TP-PMD specification requires that any received signal with peak-to-peak differential amplitude greater than 1000 mV should turn on signal detect (internal signal in 100BASE-TX mode). The device will accept signals typically with 460 mV peak-to-peak differential amplitude.
5. The ANSI-PMD specification requires that any received signal with peak-to-peak differential amplitude less than 200 mV should de-assert signal detect (internal signal in 100BASE-TX mode). The Alaska® Quad will reject signals typically with peak-to-peak differential amplitude less than 360 mV.

Copyright © 2018 Marvell

4.8 AC Electrical Specifications

4.8.1 Reset Timing

Table 151: Reset Timing

(Over Full range of values listed in the Recommended Operating Conditions unless otherwise specified)

Symbol	Parameter	Min	Typ	Max	Units
T_{PU_RESET}	Valid power to RESETn de-asserted	10			ms
$T_{SU_XTAL_IN}$	Number of valid XTAL_IN cycles prior to RESETn de-asserted	10			clks
T_{RESET}	Minimum reset pulse width during normal operation	10			ms

Figure 24: Reset Timing

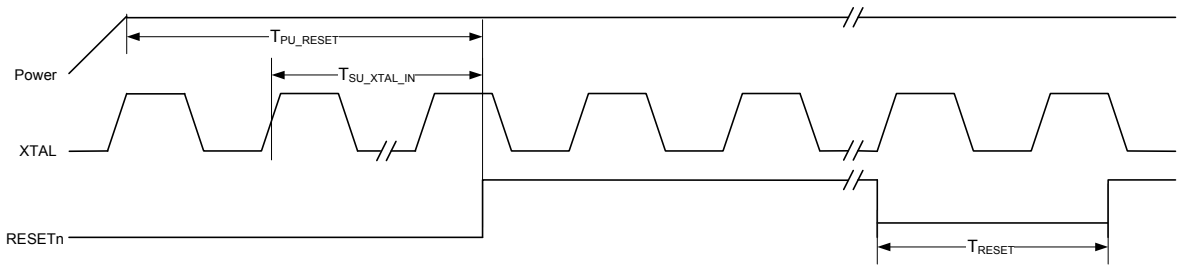

4.8.2 XTAL_IN/XTAL_OUT Timing[1]

Table 152: XTAL_IN/XTAL_OUT Timing

(Over full range of values listed in the Recommended Operating Conditions unless otherwise specified)

Symbol	Parameter	Condition	Min	Typ	Max	Units
$T_{P_XTAL_IN}$	XTAL_IN Period		40-50 ppm	40	40+50 ppm	ns
$T_{H_XTAL_IN}$	XTAL_IN High time		13	20	27	ns
$T_{L_XTAL_IN}$	XTAL_IN Low time		13	20	27	ns
$T_{R_XTAL_IN}$	XTAL_IN Rise	10% to 90%	-	3.0	-	ns
$T_{F_XTAL_IN}$	XTAL_IN Fall	90% to 10%	-	3.0	-	ns
$T_{J_XTAL_IN}$	XTAL_IN total jitter[1]		-	-	200	ps[2]
XTAL_ESR	Crystal ESR[3]		-	30	50	W

1. PLL generated clocks are not recommended as input to XTAL_IN since they can have excessive jitter. Zero delay buffers are also not recommended for the same reason.
2. 12 kHz to 20 MHz rms jitter on XTAL_IN = 4 ps.
3. See “How to use Crystals as Clock Sources” application note for details.

Figure 25: XTAL_IN/XTAL_OUT Timing

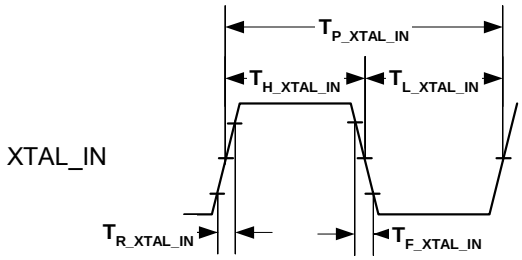

1. If the crystal option is used, ensure that the frequency is 25 MHz ± 50 ppm. Capacitors must be chosen carefully - see application note supplied by the crystal vendor.

Copyright © 2018 Marvell

4.8.3 LED to CONFIG Timing

Table 153: LED to CONFIG Timing

Symbol	Parameter	Min	Typ	Max	Units
T_{DLY_CONFIG}	LED to CONFIG Delay	0		25	ns

Figure 27: LED to CONFIG Timing

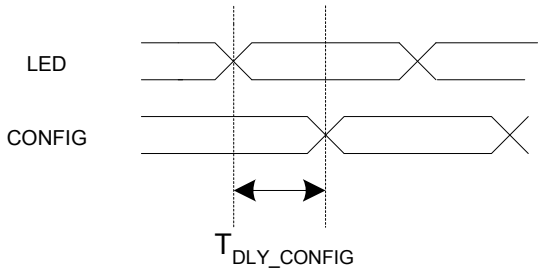

4.9 SGMII Timing

4.9.1 SGMII Output AC Characteristics

Table 154: SGMII Output AC Characteristics

Symbol	Parameter	Min	Typ	Max	Units
T_{FALL}	V_{OD} Fall time (20% - 80%)	100		200	ps
T_{RISE}	V_{OD} Rise time (20% - 80%)	100		200	ps
T_{SKEW1}[1]	Skew between two members of a differential pair			20	ps
$T_{OutputJitter}$	Total Output Jitter Tolerance (Deterministic + 14*rms Random)		127		ps

1. Skew measured at 50% of the transition.

4.9.2 SGMII Input AC Characteristics

Table 155: SGMII Input AC Characteristics

Symbol	Parameter	Min	Typ	Max	Units
$T_{InputJitter}$	Total Input Jitter Tolerance (Deterministic + 14*rms Random)			599	ps

Copyright © 2018 Marvell

4.10 RGMII Timing

4.10.1 RGMII AC Characteristics

Table 156: RGMII AC Characteristics

(This table is copied from the RGMII Specification. See Application Note “RGMII Timing Modes” for details of how to convert the timings in this table to the four timing modes discussed in Section 4.10.2, RGMII Delay Timing for Different RGMII Modes, on page 136).

Symbol	Parameter	Min	Typ	Max	Units
TskewT	Data to Clock output Skew (at transmitter)	-500	0	500	ps
TskewR	Data to Clock input Skew (at receiver)	1.0	-	2.8	ns
T_{CYCLE}	Clock Cycle Duration	7.2	8.0	8.8	ns
$T_{CYCLE_HIGH1000}$	High Time for 1000BASE-T [1]	3.6	4.0	4.4	ns
$T_{CYCLE_HIGH100}$	High Time for 100BASE-T[1]	16	20	24	ns
T_{CYCLE_HIGH10}	High Time for 10BASE-T[1]	160	200	240	ns
T_{RISE}/T_{FALL}	Rise/Fall Time (20-80%)			0.75	ns

1. Duty cycle may be stretched/shrunk during speed changes or while transitioning to a received packet’s clock domain as long as minimum duty cycle is not violated and stretching occurs for no more than three TCYCLE of the lowest speed transitioned between.

Figure 29: RGMII Multiplexing and Timing

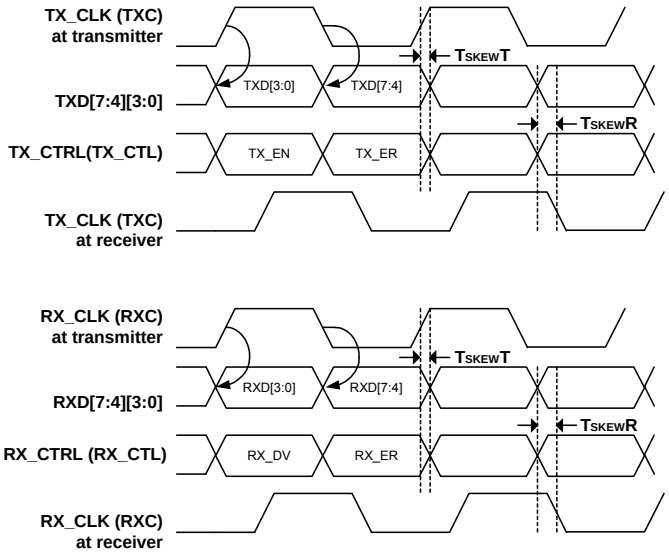

This figure is copied from the RGMII Specification. See Application Note “RGMII Timing Modes” for details of how to convert the timings in this table to the four timing modes discussed in Section 4.10.2, RGMII Delay Timing for Different RGMII Modes, on page 136

4.10.2 RGMII Delay Timing for Different RGMII Modes

4.10.2.1 PHY Input - TX_CLK Delay when Register 21_2.4 = 0

Table 157: PHY Input - TX_CLK Delay when Register 21_2.4 = 0

(Over full range of values listed in the Recommended Operating Conditions unless otherwise specified)

Symbol	Parameter	Min	Typ	Max	Units
t_{setup}	Register 21_2.4 = 0	1.0			ns
t_{hold}		0.8			ns

Figure 30: TX_CLK Delay Timing - Register 21_2.4 = 0

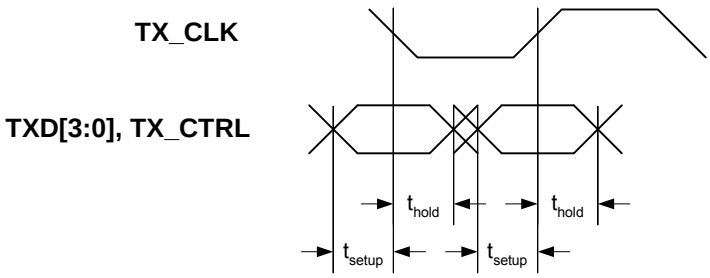

4.10.2.2 PHY Input - TX_CLK Delay when Register 21_2.4 = 1

Table 158: PHY Input - TX_CLK Delay when Register 21_2.4 = 1

(Over full range of values listed in the Recommended Operating Conditions unless otherwise specified)

Symbol	Parameter	Min	Typ	Max	Units
t_{setup}	Register 21_2.4 = 1 (add delay)	-0.9			ns
t_{hold}		2.7			ns

Figure 31: TX_CLK Delay Timing - Register 21_2.4 = 1 (add delay)

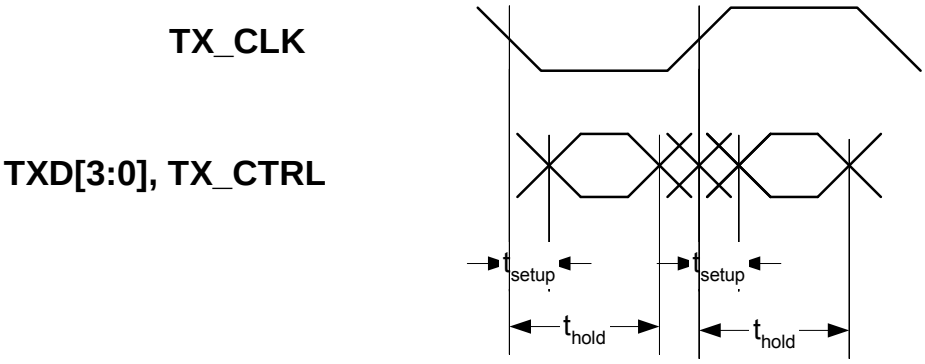

Copyright © 2018 Marvell

4.10.2.3 PHY Output - RX_CLK Delay

Table 159: PHY Output - RX_CLK Delay

(Over full range of values listed in the Recommended Operating Conditions unless otherwise specified)

Symbol	Parameter	Min	Typ	Max	Units
t_{skew}	Register 21_2.5 = 0	- 0.5		0.5	ns

Figure 32: RGMII RX_CLK Delay Timing - Register 21_2.5 = 0

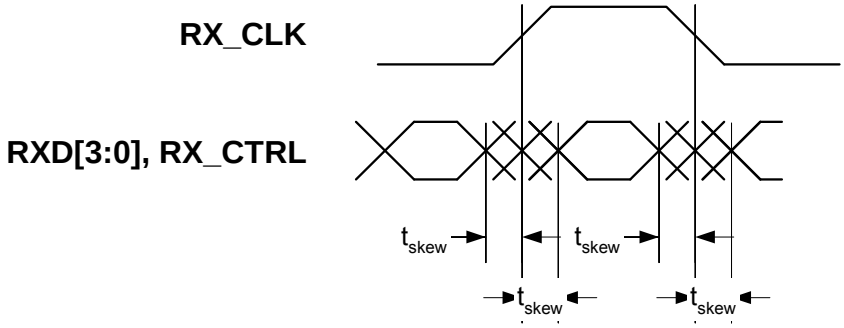

4.10.2.4 PHY Output - RX_CLK Delay

Table 160: PHY Output - RX_CLK Delay

(Over full range of values listed in the Recommended Operating Conditions unless otherwise specified)

Symbol	Parameter	Min	Typ	Max	Units
t_{setup}	Register 21_2.5 = 1 (add delay)	1.2			ns
t_{hold}		1.2			ns

Figure 33: RGMII RX_CLK Delay Timing - Register 21_2.5 = 1 (add delay)

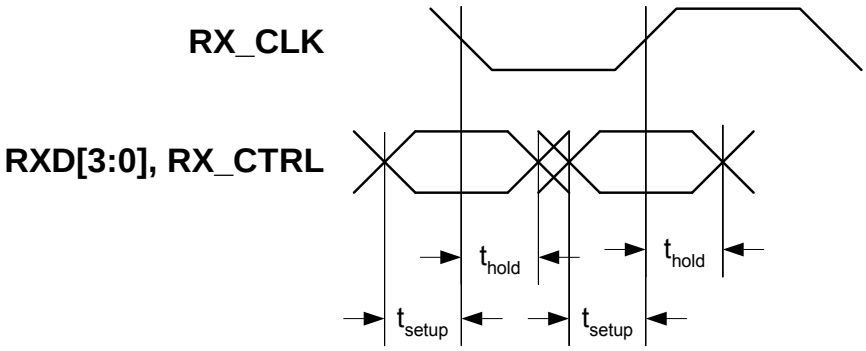

4.11 MDC/MDIO Timing

Table 161: MDC/MDIO Timing

(Over full range of values listed in the Recommended Operating Conditions unless otherwise specified)

Symbol	Parameter	Min	Typ	Max	Units
T_{DLY_MDIO}	MDC to MDIO (Output) Delay Time	0		20	ns
T_{SU_MDIO}	MDIO (Input) to MDC Setup Time	10			ns
T_{HD_MDIO}	MDIO (Input) to MDC Hold Time	10			ns
T_{P_MDC}	MDC Period	83.3			ns[1]
T_{H_MDC}	MDC High	30			ns
T_{L_MDC}	MDC Low	30			ns

1. Maximum frequency = 12 MHz.

Figure 34: MDC/MDIO Timing

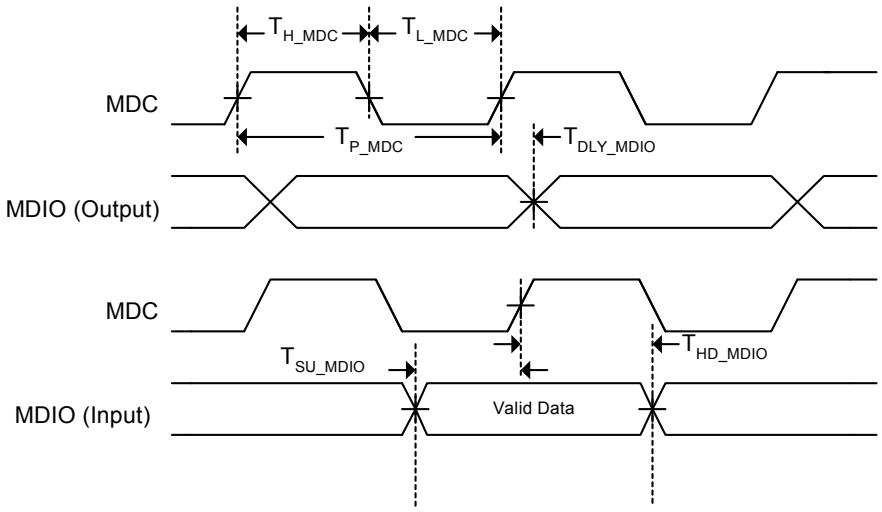

Copyright © 2018 Marvell

4.12 IEEE AC Transceiver Parameters

Table 162: IEEE AC Transceiver Parameters

IEEE tests are typically based on templates and cannot simply be specified by number. For an exact description of the templates and the test conditions, refer to the IEEE specifications:
-10BASE-T IEEE 802.3 Clause 14-2000
-100BASE-TX ANSI X3.263-1995
-1000BASE-T IEEE 802.3ab Clause 40 Section 40.6.1.2 Figure 40-26 shows the template waveforms for transmitter electrical specifications.

(Over full range of values listed in the Recommended Operating Conditions unless otherwise specified)

Symbol	Parameter	Pins	Condition	Min	Typ	Max	Units
T_{RISE}	Rise time	MDIP/N[1:0]	100BASE-TX	3.0	4.0	5.0	ns
T_{FALL}	Fall Time	MDIP/N[1:0]	100BASE-TX	3.0	4.0	5.0	ns
T_{RISE}/T_{FALL} Symmetry		MDIP/N[1:0]	100BASE-TX	0		0.5	ns
DCD	Duty Cycle Distortion	MDIP/N[1:0]	100BASE-TX	0		0.5[1]	ns, peak-peak
Transmit Jitter		MDIP/N[1:0]	100BASE-TX	0		1.4	ns, peak-peak

1. ANSI X3.263-1995 Figure 9-3

4.13 Latency Timing

4.13.1 RGMII to 1000BASE-T Transmit Latency Timing

Table 163: RGMII to 1000BASE-T Transmit Latency Timing
(Over full range of values listed in the Recommended Operating Conditions unless otherwise specified, assuming default FIFO setting)

Symbol	Parameter	Min	Typ	Max	Units
$T_{AS_TXC_MDI_1000}$	1000BASE-T TX_CTRL Asserted to MDI SSD1	141		153	ns

4.13.2 RGMII to 100BASE-TX Transmit Latency Timing

Table 164: RGMII to 100BASE-TX Transmit Latency Timing
(Over full range of values listed in the Recommended Operating Conditions unless otherwise specified, assuming default FIFO setting

Symbol	Parameter	Min	Typ	Max	Units
$T_{AS_TXC_MDI_100}$	100BASE-TX TX_CTRL Asserted to /J/	634		679	ns

4.13.3 RGMII to 10BASE-T Transmit Latency Timing

Table 165: RGMII to 10BASE-T Transmit Latency Timing
(Over full range of values listed in the Recommended Operating Conditions unless otherwise specified, assuming default FIFO setting)

Symbol	Parameter	Min	Typ	Max	Units
$T_{AS_TXC_MDI_10}$	10BASE-T TX_CTRL Asserted to Preamble	5.874		6.258	µs

Figure 36: RGMII/MII to 10/100/1000BASE-T Transmit Latency Timing

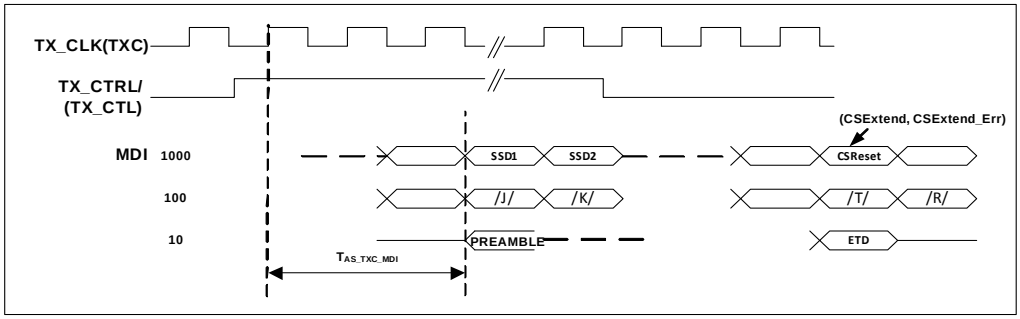

Copyright © 2018 Marvell

4.13.4 1000BASE-T to RGMII Receive Latency Timing

Table 166: 1000BASE-T to RGMII Receive Latency Timing

(Over full range of values listed in the Recommended Operating Conditions unless otherwise specified)

Symbol	Parameter	Min	Typ	Max	Units
$T_{AS_MDI_RXC_1000}$	1000BASE-T MDI start of Packet to RX_CTRL Asserted	227		235	ns

4.13.5 100BASE-TX to RGMII Receive Latency Timing

Table 167: 100BASE-TX to RGMII Receive Latency Timing

(Over full range of values listed in the Recommended Operating Conditions unless otherwise specified)

Symbol	Parameter	Min	Typ	Max	Units
$T_{AS_MDI_RXC_100}$	100BASE-TX MDI start of Packet to RX_CTRL Asserted	362		362	ns

4.13.6 10BASE-T to RGMII Receive Latency Timing

Table 168: 10BASE-T to RGMII Receive Latency Timing

(Over full range of values listed in the Recommended Operating Conditions unless otherwise specified)

Symbol	Parameter	Min	Typ	Max	Units
$T_{AS_MDI_RXC_10}$	10BASE-T MDI start of Packet to RX_CTRL Asserted	2.082		2.178	µs

Figure 37: 10/100/1000BASE-T to RGMII Receive Latency Timing

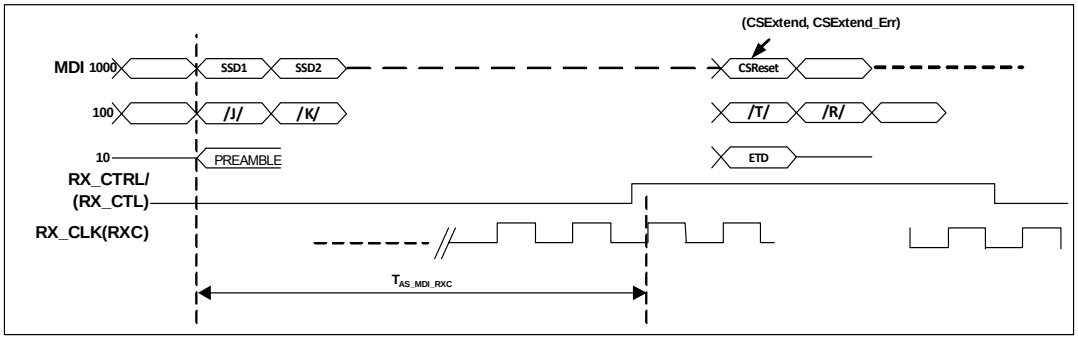

4.13.7 10/100/1000BASE-T to SGMII Latency Timing

Table 169: 10/100/1000BASE-T to SGMII Latency Timing

(Over full range of values listed in the Recommended Operating Conditions unless otherwise specified)

Symbol	Parameter	Min	Typ	Max	Units
$T_{AS_MDI_SERTX_1000}$[1,2]	MDI SSD1 to S_OUTP/N Start of Packet	326		361	ns
$T_{AS_MDI_SERTX_100}$[2]	MDI /J/ to S_OUTP/N Start of Packet	776		866	ns
$T_{AS_MDI_SERTX_10}$[2,3]	MDI Preamble to S_OUTP/N Start of Packet	5.702		6.103	us

1. In 1000BASE-T the signals on the 4 MDI pairs arrive at different times because of the skew introduced by the cable. All timing on MDIP/N[3:0] is referenced from the latest arriving signal.

2. Assumes Register 16 1.15:14 is set to 01, which is the default.
3. Actual values depend on number of bits in preamble and number of dribble bits, since nibbles on MII are aligned to start of frame delimiter and dribble bits are truncated.

Figure 38: 10/100/1000BASE-T to SGMII Latency Timing

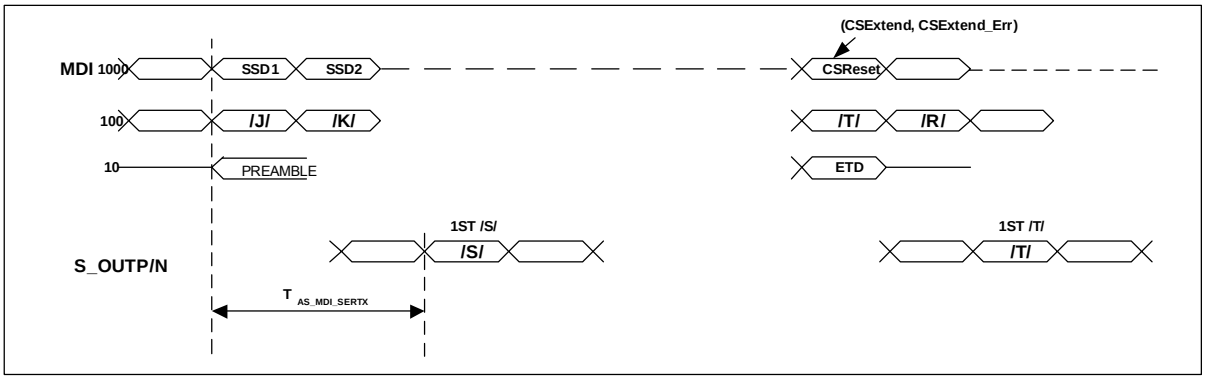

4.13.8 SGMII to 10/100/1000BASE-T Latency Timing

Table 170: SGMII to 10/100/1000BASE-T Latency Timing

(Over full range of values listed in the Recommended Operating Conditions unless otherwise specified)

Symbol	Parameter	Min	Typ	Max	Units
$T_{AS_SERRX_MDI_1000}$[1]	S_INP/N Start of Packet /S/ to MDI SSD1	206		232	ns
$T_{AS_SERRX_MDI_100}$[1]	S_INP/N Start of Packet /S/ to MDI /J/	626		706	ns
$T_{AS_SERRX_MDI_10}$[1]	S_INP/N Start of Packet /S/ to MDI Preamble	4.991		5.779	us

1. Assumes register 16_2.15:14 is set to 01, which is the default.

Figure 39: SGMII to 10/100/1000BASE-T Latency Timing

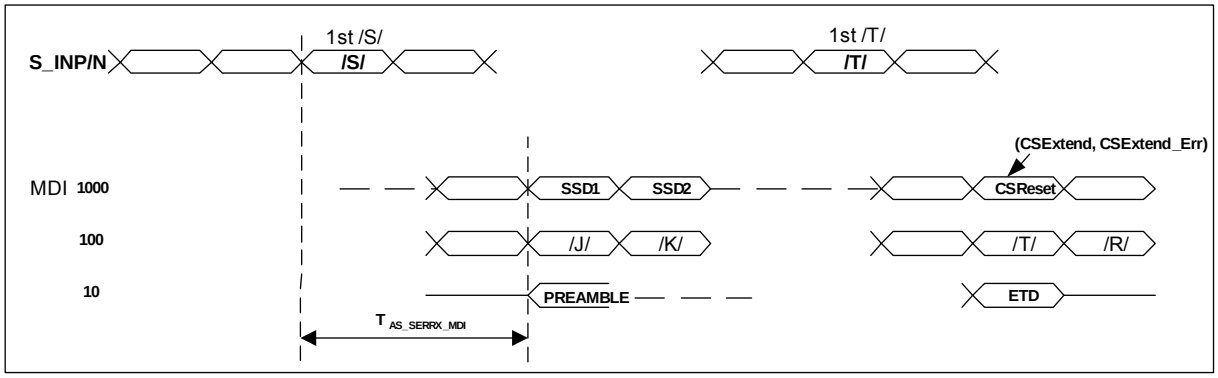

Copyright © 2018 Marvell

5 Package Mechanical Dimensions

This section includes information on the following topics:

- Section 5.1, 48-Pin QFN Package
- Section 5.2, 56-Pin QFN Package

5.1 48-Pin QFN Package

Figure 40: 88E1510/88E1518 48-pin QFN Package Mechanical Drawings

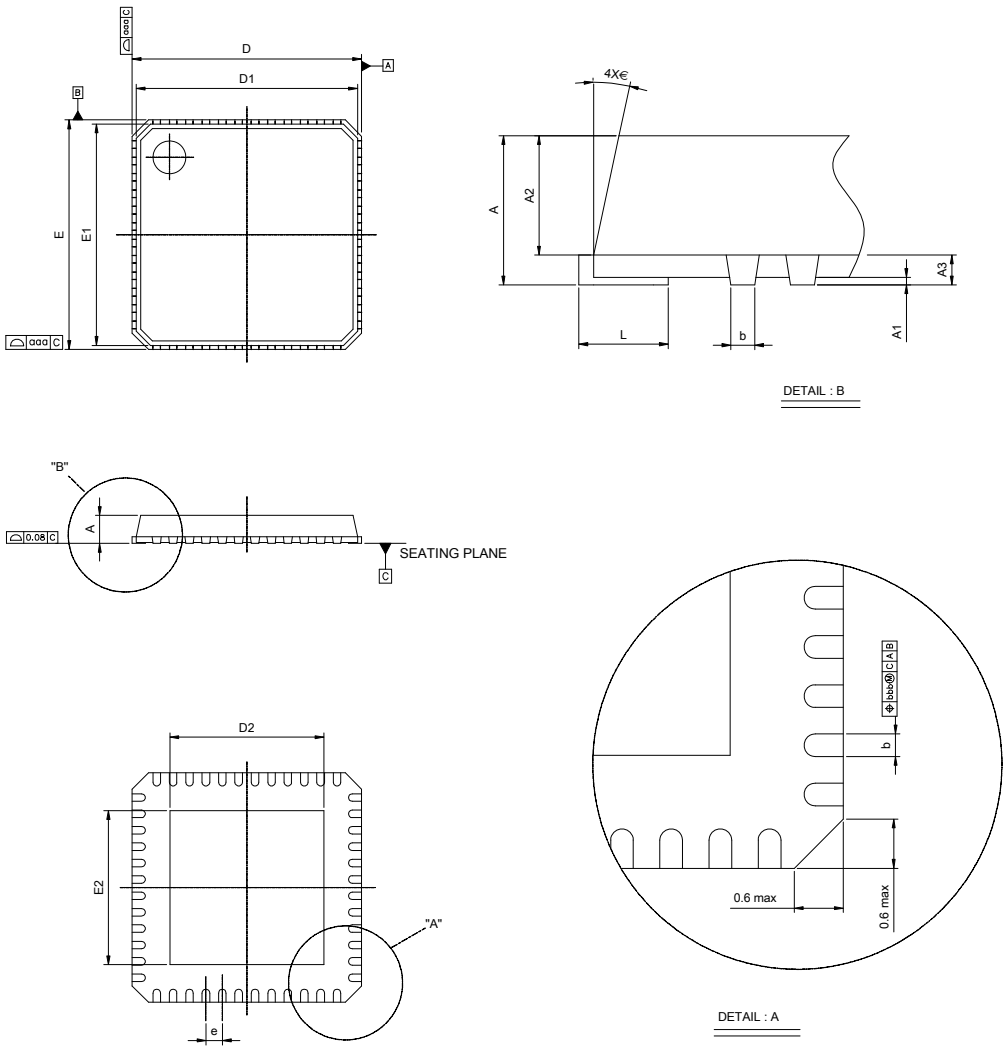

NOTE:

1. CONTROLLING DIMENSION : MILLIMETER

Table 171: 48-Pin QFN Mechanical Dimensions

Symbol	Dimensions in mm		
	MIN	NOM	MAX
A	0.80	0.85	1.00
A1	0.00	0.02	0.05
A2	--	0.65	1.00
A3	0.20 REF		
b	0.18	0.23	0.30
D	7.00 BSC		
D1	6.75 BSC		
E	7.00 BSC		
E1	6.75 BSC		
e	0.50 BSC		
L	0.30	0.40	0.50
θ	0°	--	12°
aaa	--	--	0.25
bbb	--	--	0.10
chamfer	--	--	0.60

Die Pad Size	
Symbol	Dimension in mm
D_2	3.10
E_2	3.10

Copyright © 2018 Marvell

5.2 56-Pin QFN Package

Figure 41: 88E1512/88E1514 56-pin QFN Package Mechanical Drawings

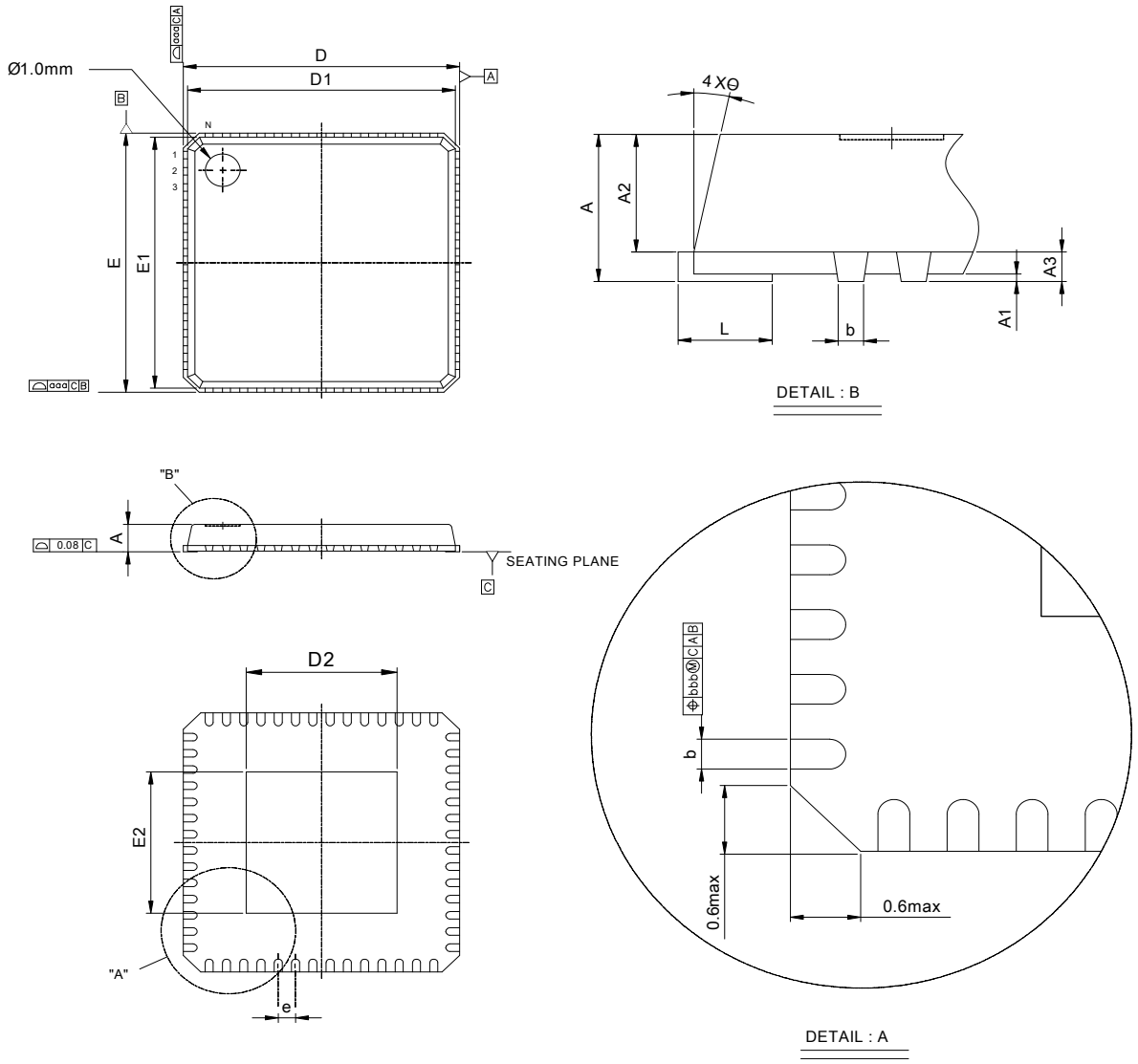

Note All dimensions in mm.

Table 172: 56-Pin QFN Mechanical Dimensions

Symbol	Dimensions in mm		
	MIN	NOM	MAX
A	0.80	0.85	1.00
A1	0.00	0.02	0.05
A2	--	0.65	1.00
A3	0.20 REF		
b	0.18	0.23	0.30
D	8.00 BSC		
D1	7.75 BSC		
E	8.00 BSC		
E1	7.75 BSC		
e	0.50 BSC		
L	0.30	0.40	0.50
θ	0°	--	12°
aaa	--	--	0.15
bbb	--	--	0.10
chamfer	--	--	0.60

Die Pad Size	
Symbol	Dimension in mm
D_2	4.37
E_2	4.37

Copyright © 2018 Marvell

6 Part Order Numbering/Package Marking

This section includes information on the following topics:

- Section 6.1, Part Order Numbering
- Section 6.2, Package Marking

6.1 Part Order Numbering

Figure 42 shows the part order numbering scheme for the 88E1510/88E1518/88E1512/88E1514. Refer to Marvell Field Application Engineers (FAEs) or representatives for further information when ordering parts.

Figure 42: Sample Part Number

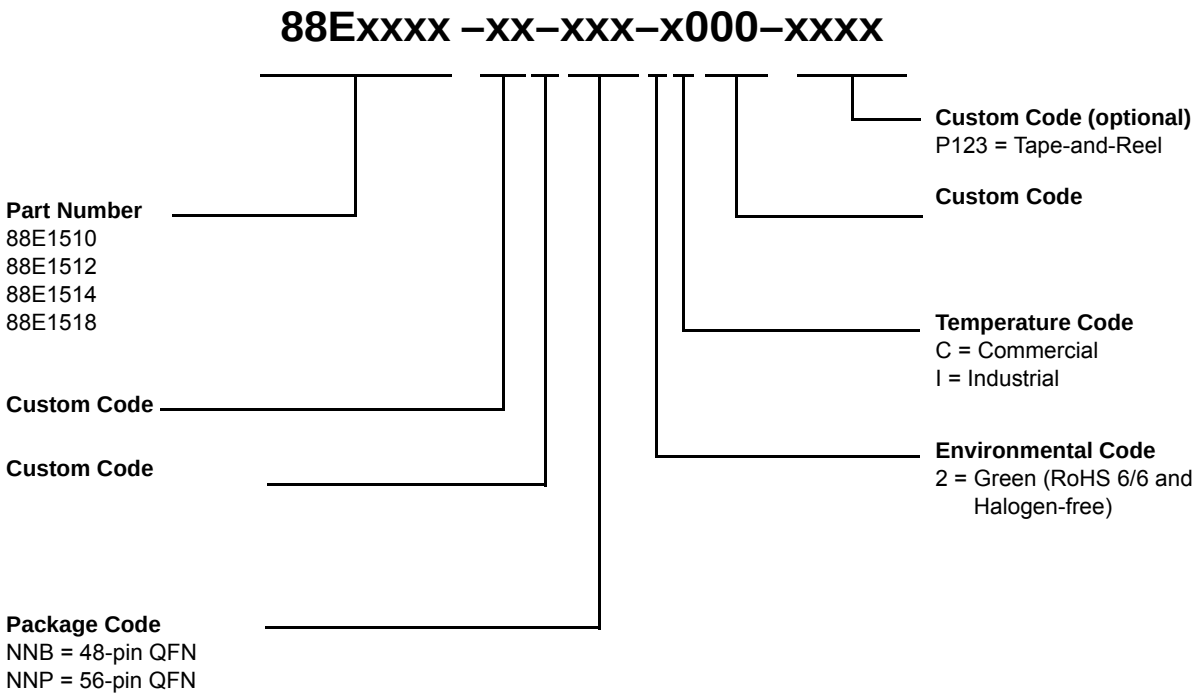

Table 173: 88E1510/88E1518/88E1512/88E1514 Part Order Options

Package Type	Part Order Number
Commercial	
88E1510 48-pin QFN	88E1510-xx-NNB2C000 (Commercial, Green, RoHS 6/6 and Halogen-free package)
88E1510 48-pin QFN Tape-and-Reel	88E1510-xx-NNB2C000-P123 (Commercial, Green, RoHS 6/6 and Halogen-free package)
88E1518 48-pin QFN	88E1518-xx-NNB2C000 (Commercial, Green, RoHS 6/6 and Halogen-free package)

Table 173: 88E1510/88E1518/88E1512/88E1514 Part Order Options (Continued)

Package Type	Part Order Number
88E1518 48-pin QFN Tape-and-Reel	88E1518-xx-NNB2C000-P123 (Commercial, Green, RoHS 6/6 and Halogen-free package)
88E1512 56-pin QFN	88E1512-xx-NNP2C000 (Commercial, Green, RoHS 6/6 and Halogen-free package)
88E1514 56-pin QFN	88E1514-xx-NNP2C000 (Commercial, Green, RoHS 6/6 and Halogen-free package)
88E1514 56-pin QFN Tape-and-Reel	88E1514-xx-NNP2C000-P123 (Commercial, Green, RoHS 6/6 and Halogen-free package)
Industrial	
88E1510 48-pin QFN	88E1510-xx-NNB2I000 (Industrial, Green, RoHS 6/6 and Halogen-free package)
88E1512 56-pin QFN	88E1512-xx-NNP2I000 (Industrial, Green, RoHS 6/6 and Halogen-free package)
88E1512 56-pin QFN Tape-and-Reel	88E1512-xx-NNP2I000-P123 (Industrial, Green, RoHS 6/6 and Halogen-free package)

Copyright © 2018 Marvell

6.2 Package Marking

6.2.1 Commercial

The following figures show sample Commercial package markings and pin 1 location for the 88E1510/88E1518/88E1512/88E1514:

- Figure 43 for 88E1510 48-pin QFN
- Figure 44 for 88E1518 48-pin QFN
- Figure 45 for 88E1512 56-pin QFN
- Figure 46 for 88E1514 56-pin QFN

Figure 43: 88E1510 48-pin QFN Commercial Package Marking and Pin 1 Location

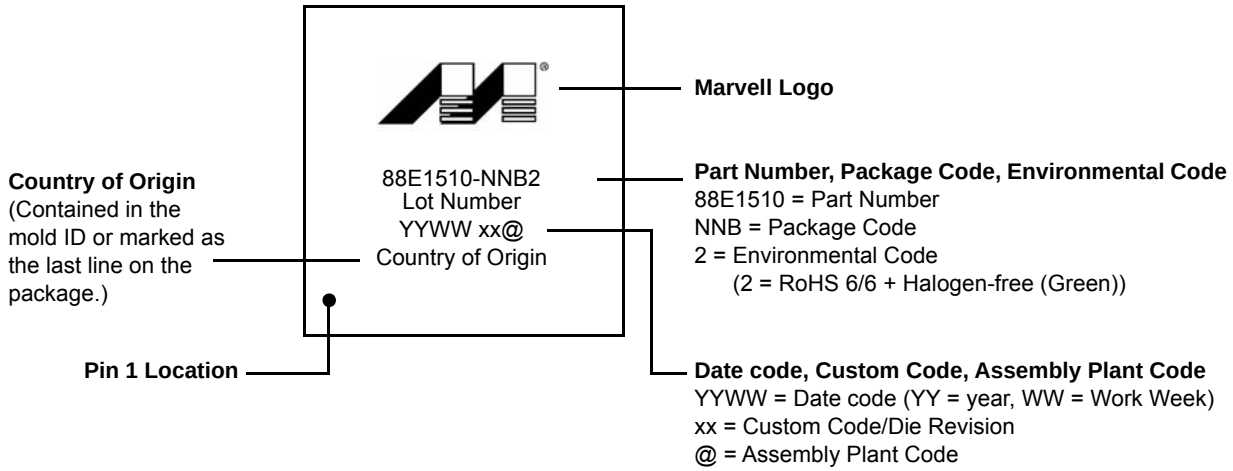

Note: The above drawing is not drawn to scale. Location of markings is approximate.

Figure 44: 88E1518 48-pin QFN Commercial Package Marking and Pin 1 Location

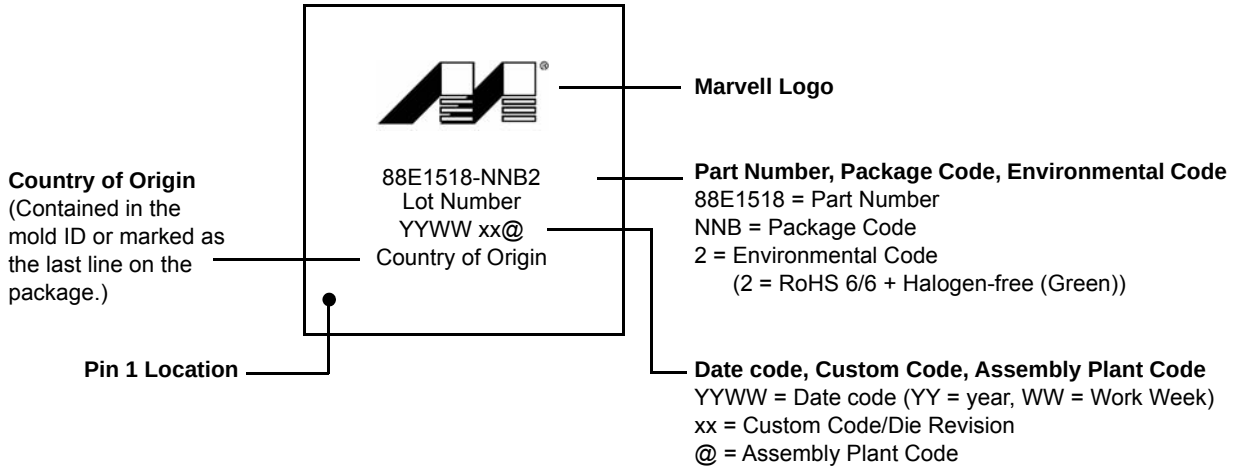

Note: The above drawing is not drawn to scale. Location of markings is approximate.

Figure 45: 88E1512 56-pin QFN Commercial Package Marking and Pin 1 Location

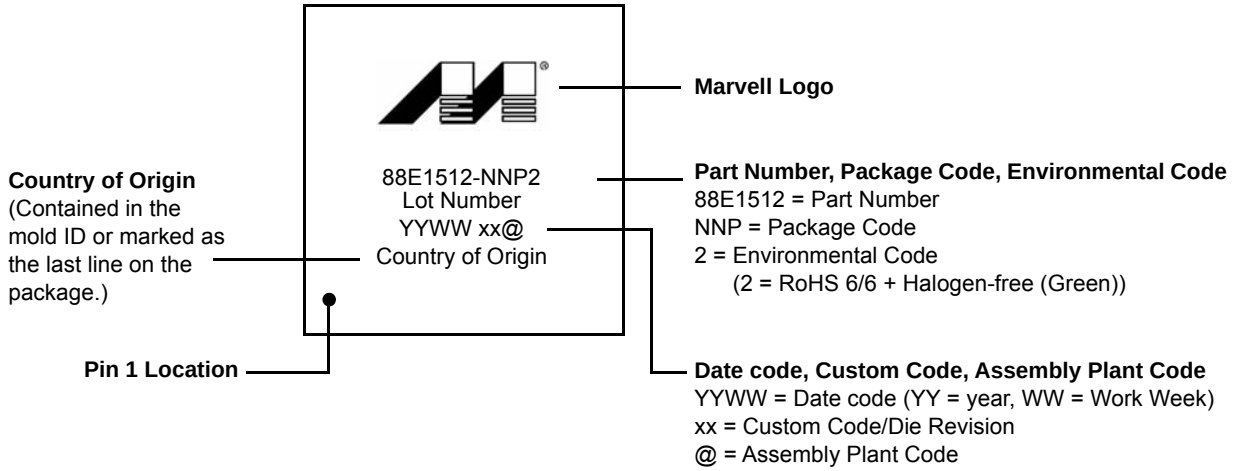

Note: The above drawing is not drawn to scale. Location of markings is approximate.

Copyright © 2018 Marvell

Figure 46: 88E1514 56-pin QFN Commercial Package Marking and Pin 1 Location

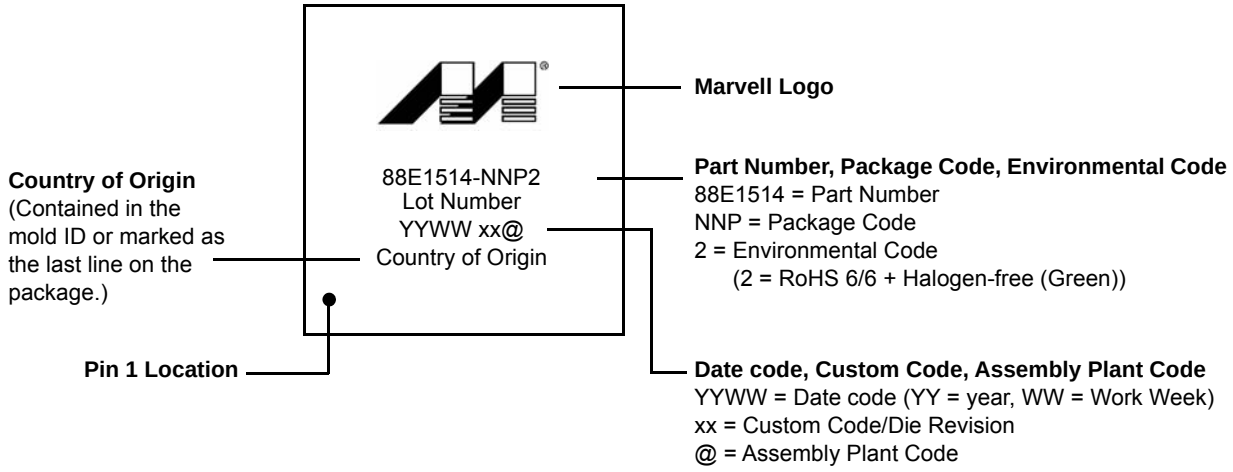

Note: The above drawing is not drawn to scale. Location of markings is approximate.

6.2.2 Industrial

The following figures show sample Industrial package markings and pin 1 location for the 88E1510/88E1518/88E1512/88E1514:

- Figure 47 for 88E1510 48-pin QFN
- Figure 48 for 88E1512 56-pin QFN

Figure 47: 88E1510 48-pin QFN Industrial Package Marking and Pin 1 Location

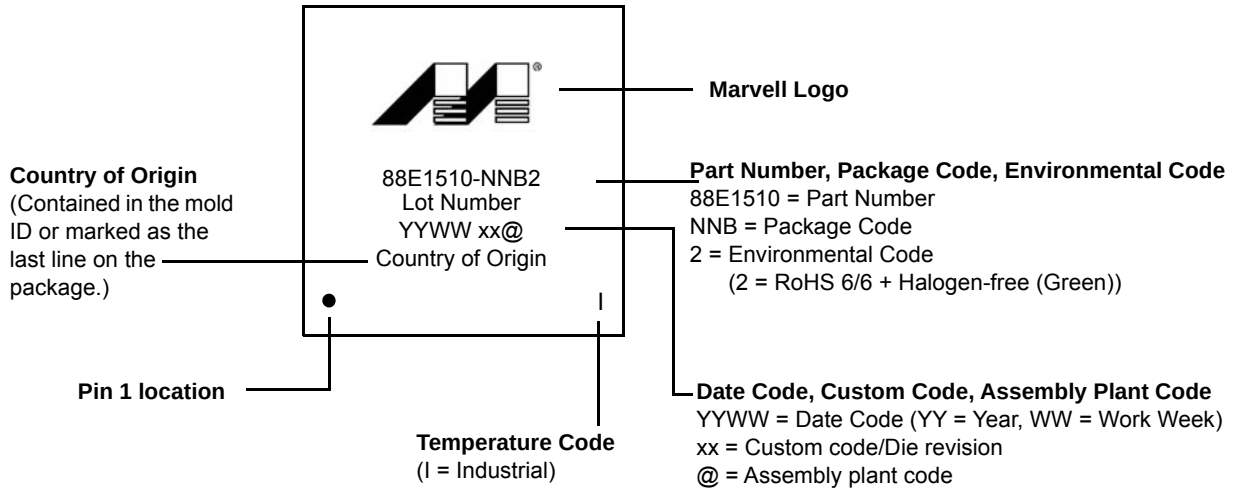

Note: The above drawing is not drawn to scale. Location of markings is approximate.

Figure 48: 88E1512 56-pin QFN Industrial Package Marking and Pin 1 Location

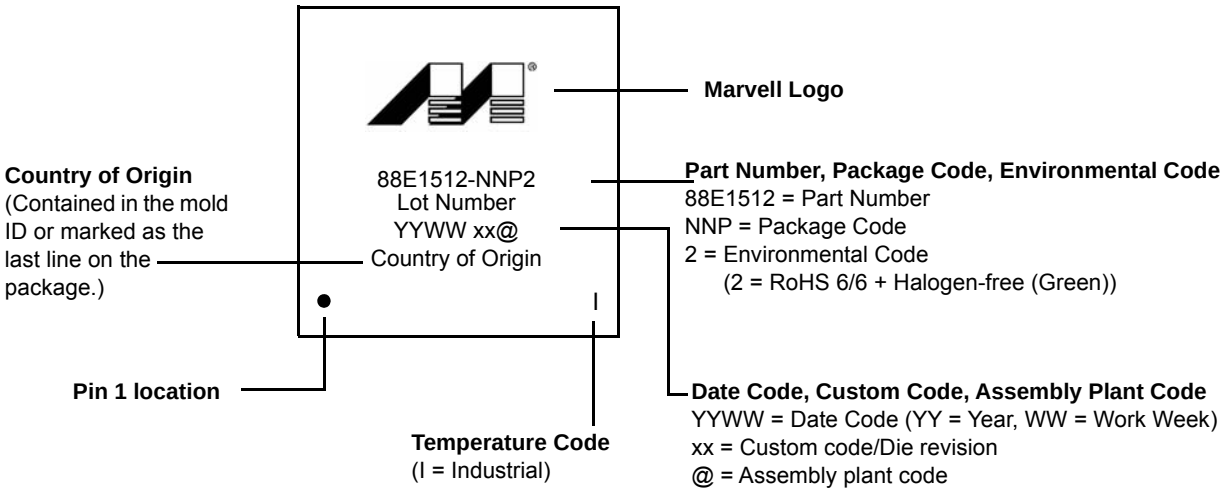

Note: The above drawing is not drawn to scale. Location of markings is approximate.

Copyright © 2018 Marvell

A Revision History

Table 174: Revision History

Revision	Date	Section	Detail
Rev. B	February 23, 2018	All applicable	Cosmetic enhancements
		Part Order Numbering/Package Marking	Table 173: 88E1510/88E1518/88E1512/88E1514 Part Order Options: added part number for 88E1512 56-pin QFN Tape-and-Reel
Rev. A	January 4, 2018	—	Initial release

Marvell Technology Group
http://www.marvell.com

Marvell. Moving Forward Faster

Mouser Electronics

Authorized Distributor

Click to View Pricing, Inventory, Delivery & Lifecycle Information:

Marvell:
88E1510-A0-NNB2C000 88E1512-A0-NNP2I000 88E1512-A0-NNP2C000 88E1514-A0-NNP2C000 88E1518-A0-NNB2C000 88E1510-A0-NNB2I000

Компания «ЭлектроПласт» предлагает заключение долгосрочных отношений при поставках импортных электронных компонентов на взаимовыгодных условиях!

Наши преимущества:

- Оперативные поставки широкого спектра электронных компонентов отечественного и импортного производства напрямую от производителей и с крупнейших мировых складов;
- Поставка более 17-ти миллионов наименований электронных компонентов;
- Поставка сложных, дефицитных, либо снятых с производства позиций;
- Оперативные сроки поставки под заказ (от 5 рабочих дней);
- Экспресс доставка в любую точку России;
- Техническая поддержка проекта, помощь в подборе аналогов, поставка прототипов;
- Система менеджмента качества сертифицирована по Международному стандарту ISO 9001;
- Лицензия ФСБ на осуществление работ с использованием сведений, составляющих государственную тайну;
- Поставка специализированных компонентов (Xilinx, Altera, Analog Devices, Intersil, Interpoint, Microsemi, Aeroflex, Peregrine, Syfer, Eurofarad, Texas Instrument, Miteq, Cobham, E2V, MA-COM, Hittite, Mini-Circuits,General Dynamics и др.);

Помимо этого, одним из направлений компании «ЭлектроПласт» является направление «Источники питания». Мы предлагаем Вам помощь Конструкторского отдела:

- Подбор оптимального решения, техническое обоснование при выборе компонента;
- Подбор аналогов;
- Консультации по применению компонента;
- Поставка образцов и прототипов;
- Техническая поддержка проекта;
- Защита от снятия компонента с производства.

Как с нами связаться

Телефон: 8 (812) 309 58 32 (многоканальный)
Факс: 8 (812) 320-02-42
Электронная почта: org@eplast1.ru
Адрес: 198099, г. Санкт-Петербург, ул. Калинина, дом 2, корпус 4, литера А.