Ferrites and accessories

RM 10, RM 10 LP
Cores and accessories

Series/Type: **B65813, B65814, B65679**
Date: June 2013

© EPCOS AG 2015. Reproduction, publication and dissemination of this publication, enclosures hereto and the information contained therein without EPCOS' prior express consent is prohibited.

EPCOS AG is a TDK Group Company.

RM 10

Core and accessories

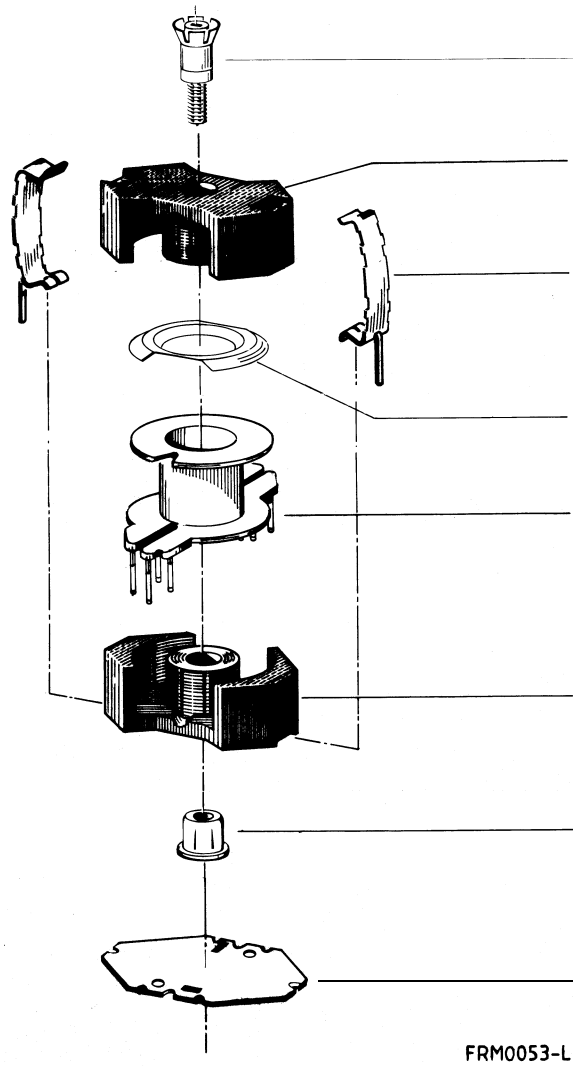

Example of an assembly set

Individual parts	Part no.	Page
Adjusting screw	B65679	8
Core	B65813	3
Clamps	B65814	7
Insulating washer 1	B65814	7
Coil former	B65814	5
Core	B65813	3
Threaded sleeve (glued-in)		
Insulating washer 2	B65814	7

Also available:

Coil former for power applications	B65814	6
<u>RM 10 low-profile:</u>		
Core	B65813P	9

- To IEC 62317-4
- Cores without center hole for transformer applications
- Delivery mode: sets

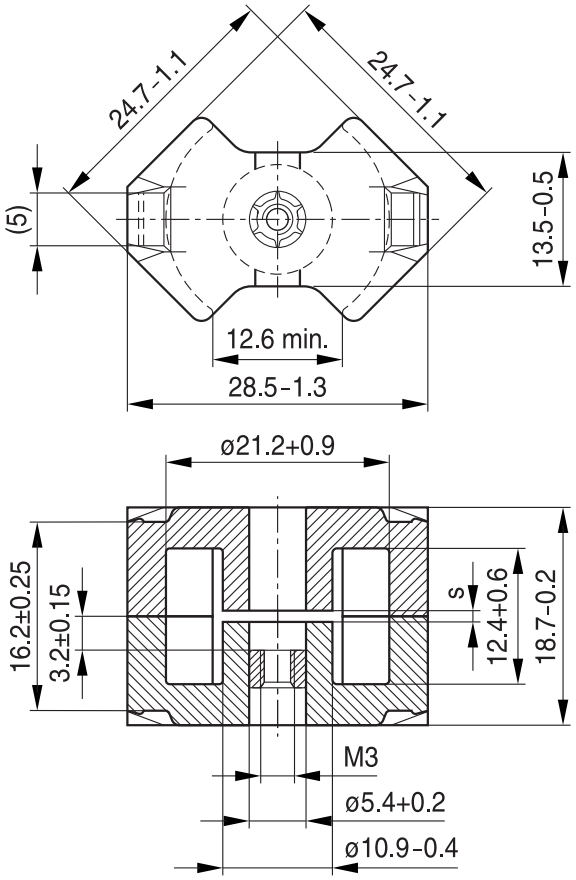

FRM0354-D

Magnetic characteristics (per set)

	with center hole	without center hole	
$\Sigma l/A$	0.5	0.45	mm^{-1}
l_e	42	44	mm
A_e	83	98	mm^2
A_{min}	—	90	mm^2
V_e	3490	4310	mm^3

Approx. weight (per set)

m	20.7	22	g

Gapped

Material	A_L value nH	s approx. mm	μ_e	Ordering code[1)] -D with center hole -N with threaded sleeve -J without center hole
N48	400 ± 3% 630 ± 3%	0.21 0.13	161 254	B65813+0400A048 B65813+0630A048
N41	250 ± 3% 630 ± 5% 1600 ±10%	0.44 0.13 0.04	89 225 572	B65813J0250A041 B65813J0630J041 B65813J1600K041

1) Replace the + by the code letter “D” or “N” for the required version.

Ungapped

Material	A_L value nH	μ_e	P_V W/set	Ordering code -J without center hole
N30	7600 +30/–20%	2720		B65813J0000R030
T38	16000 +40/–30%	5720		B65813J0000Y038
N49	2900 +30/–20%	1040	< 0.75 (50 mT, 500 kHz,100 °C)	B65813J0000R049
N87	4200 +30/–20%	1500	< 2.30 (200 mT, 100 kHz, 100 °C)	B65813J0000R087
N97	4200 +30/–20%	1500	< 2.00 (200 mT, 100 kHz, 100 °C)	B65813J0000R097
N41	5500 +30/–20%	1960	< 0.80 (200 mT, 25 kHz, 100 °C)	B65813J0000R041

Coil former

Material: GFR thermosetting plastic (UL 94 V-0, insulation class to IEC 60085: H ≙ max. operating temperature 180 °C), color code black Sumikon PM 9630® [E41429 (M)], SUMITOMO BAKELITE CO LTD

Solderability: to IEC 60068-2-20, test Ta, method 1 (aging 3): 235 °C, 2 s

Resistance to soldering heat: to IEC 60068-2-20, test Tb, method 1B: 350 °C, 3.5 s

Winding: see Data Book 2013, chapter “Processing notes, 2.1”

Squared pins.

For matching clamp and insulating washers see page 7.

Sections	A_N mm²	l_N mm	A_R value µΩ	Pins	Ordering code
1	41.5	52	43	8 12	B65814N1008D001 B65814N1012D001
2	39	52	46	8 12	B65814N1008D002 B65814N1012D002

12 pins

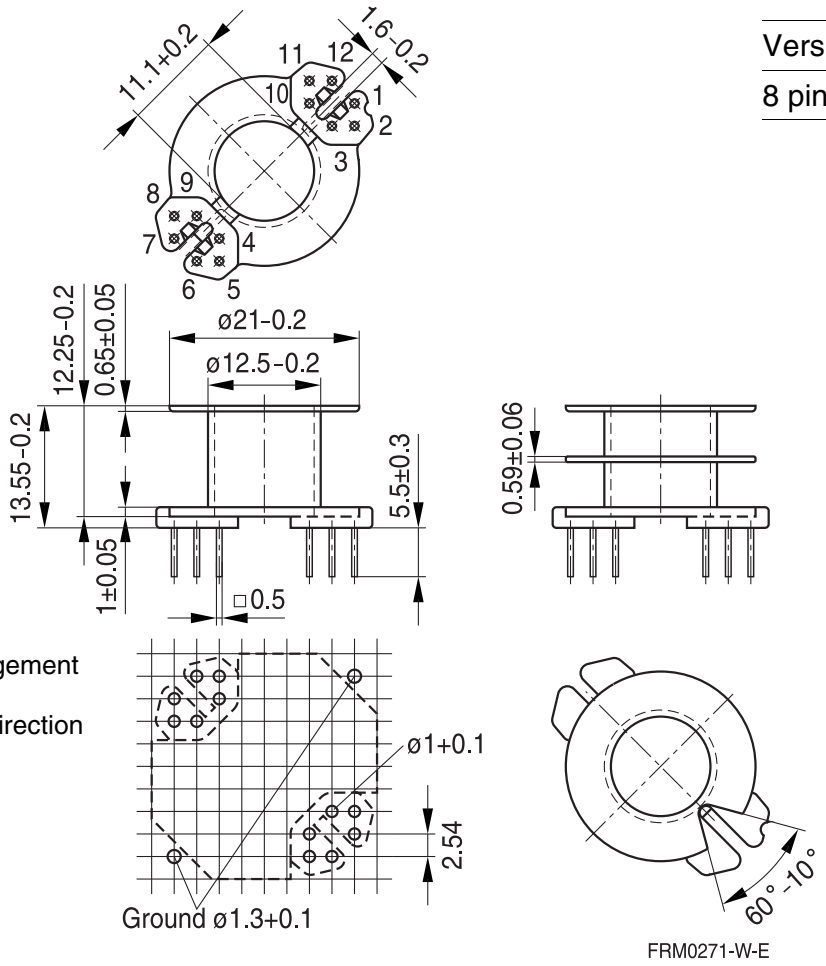

Version	Pins omitted
8 pins	2, 5, 8, 11

Hole arrangement
View in
mounting direction

FRM0271-W-E

Coil former for power applications

Optimized for automatic winding
Material: GFR polyterephthalate (UL 94 V-0, insulation class to IEC 60085: F ≙ max. operating temperature 155 °C), color code black Valox 420-SE0® [E45329 (M)], GE PLASTICS B V
Solderability: to IEC 60068-2-20, test Ta, method 1 (aging 3): 235 °C, 2 s
Resistance to soldering heat: to IEC 60068-2-20, test Tb, method 1B: 350 °C, 3.5 s
Winding: see Data Book 2013, chapter “Processing notes, 2.1”

For matching clamp and insulating washer 1 see page 7.

Sections	A_N mm²	l_N mm	A_R value µΩ	Pins	Ordering code
1	41.5	52	43	12	B65814C1512T001

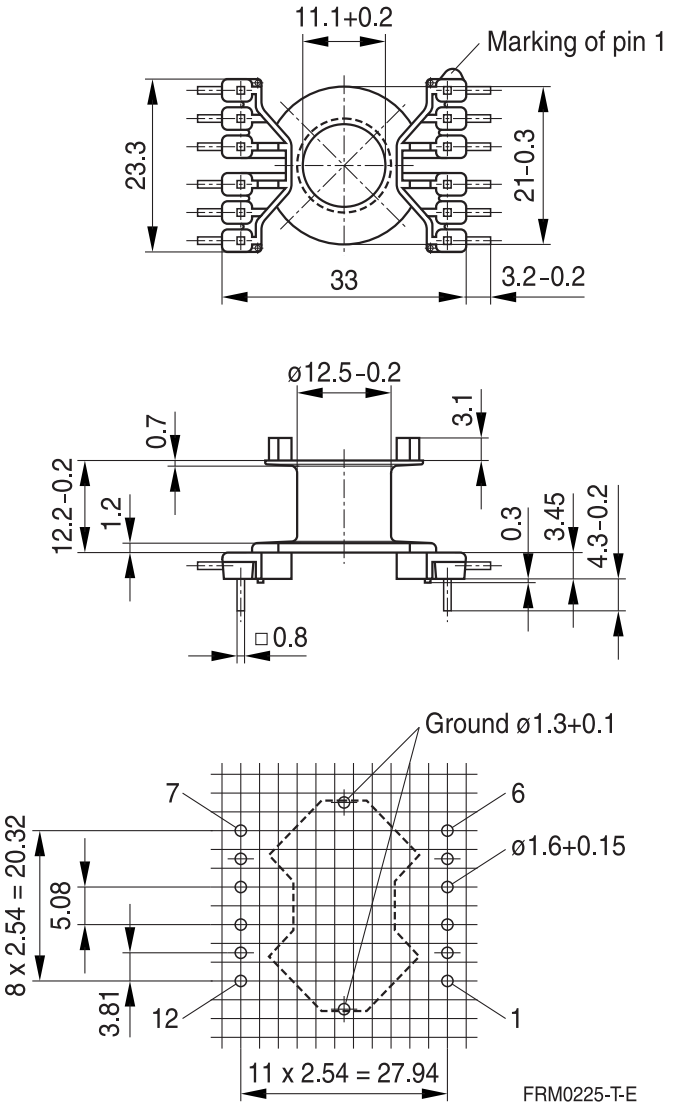

Hole arrangement
View in mounting direction
(Note half pitch!)

Clamp

- With ground terminal, made of stainless spring steel (tinned), 0.4 mm thick
- Solderability to IEC 60068-2-20, test Ta, method 1 (aging 3): 235 °C, 2 s
- Also available as strip clamp on reels on request

Insulating washer 1 between core and coil former

- For tolerance compensation and for insulation
- Made of polycarbonate (UL 94 V-0, insulation class to IEC 60085: E ≙ 120 °C), 0.08 mm thick Aryphan F685, [E167358 (M)], natural color, LOFO HIGH TECH FILM GMBH

Insulating washer 2 for double-clad PCBs

- Made of polycarbonate (UL 94 V-0, insulation class to IEC 60085: E ≙ 120 °C), 0.25 mm thick Makrofol FR7-2, [E118859 (M)], natural color, BAYER MATERIALSCIENCE AG

	Ordering code
Clamp (ordering code per piece, 2 are required)	B65814B2203X000
Insulating washer 1 (reel packing, PU = 1 reel)	B65814B5000X000
Insulating washer 2 (bulk)	B65814B2005X000

Clamp

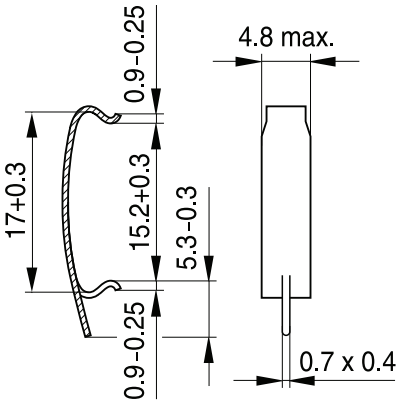

FRM0259-D

Insulating washer 1
(preliminary data)

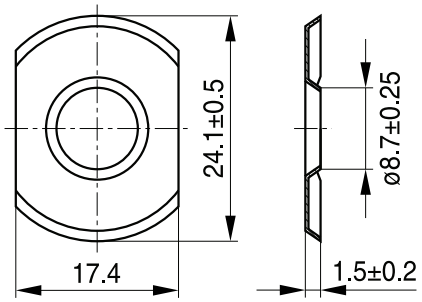

FRM0320-T

Insulating washer 2

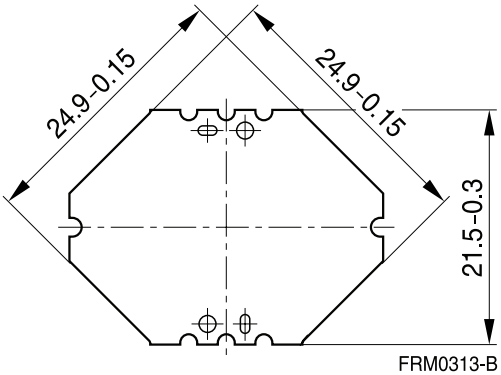

FRM0313-B

Adjusting screw

- Tube core with thread and core brake made of GFR polyterephthalate Pocan B3235® [E245249 (M)], LANXESS AG

Tube core ∅ × length (mm)	Material	Color code	Ordering code
4.55 × 6.3	N22	red	B65679E0003X022
4.98 × 6.3	N22	black	B65679E0002X022

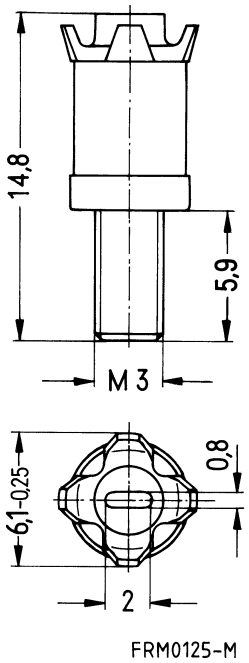

RM 10 »Low Profile«

Core B65813P

- To IEC 62317-4
- For compact transformers
- Without center hole
- Delivery mode: sets

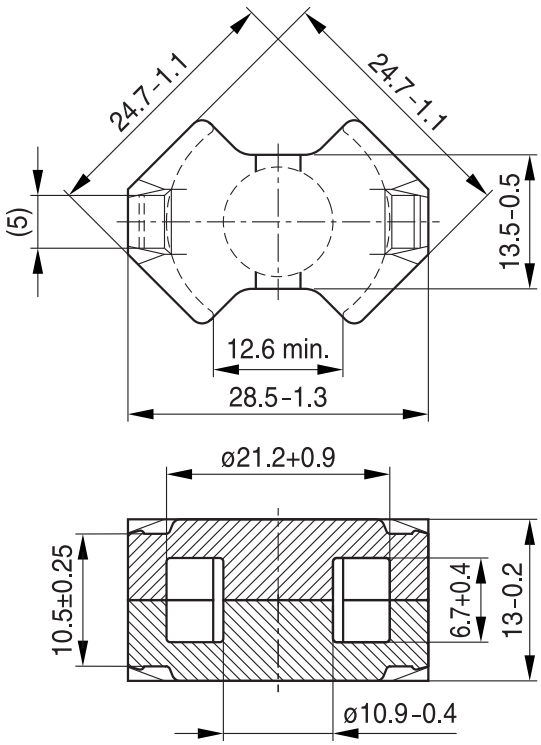

FRM0355-L

Magnetic characteristics (per set)

$\Sigma l/A$ = 0.34 mm^{-1}
l_e = 33.9 mm
A_e = 99.1 mm^2
A_{min} = 90.0 mm^2
V_e = 3360 mm^3

Approx. weight 17.2 g/set

Ungapped

Material	A_L value nH	μ_e	P_V W/set	Ordering code
N49	3700 +30/–20%	1000	< 0.62 (50 mT, 500 kHz, 100 °C)	B65813P0000R049
N92	4000 +30/–20%	1090	< 1.90 (200 mT, 100 kHz, 100 °C)	B65813P0000R092
N87	5200 +30/–20%	1410	< 1.72 (200 mT, 100 kHz, 100 °C)	B65813P0000R087

Mechanical stress and mounting

Ferrite cores have to meet mechanical requirements during assembling and for a growing number of applications. Since ferrites are ceramic materials one has to be aware of the special behavior under mechanical load.

As valid for any ceramic material, ferrite cores are brittle and sensitive to any shock, fast changing or tensile load. Especially high cooling rates under ultrasonic cleaning and high static or cyclic loads can cause cracks or failure of the ferrite cores.

For detailed information see chapter *"Definitions"*, section 8.1.

Effects of core combination on A_L value

Stresses in the core affect not only the mechanical but also the magnetic properties. It is apparent that the initial permeability is dependent on the stress state of the core. The higher the stresses are in the core, the lower is the value for the initial permeability. Thus the embedding medium should have the greatest possible elasticity.

For detailed information see chapter *"Definitions"*, section 8.2.

Heating up

Ferrites can run hot during operation at higher flux densities and higher frequencies.

NiZn-materials

The magnetic properties of NiZn-materials can change irreversible in high magnetic fields.

Processing notes

- The start of the winding process should be soft. Else the flanges may be destroid.
- To strong winding forces may blast the flanges or squeeze the tube that the cores can no more be mount.
- To long soldering time at high temperature (>300 °C) may effect coplanarity or pin arrangement.
- Not following the processing notes for soldering of the J-leg terminals may cause solderability problems at the transformer because of pollution with Sn oxyd of the tin bath or burned insulation of the wire. For detailed information see chapter *"Processing notes"*, section 8.2.
- The dimensions of the hole arrangement have fixed values and should be understood as a recommendation for drilling the printed circuit board. For dimensioning the pins, the group of holes can only be seen under certain conditions, as they fit into the given hole arrangement. To avoid problems when mounting the transformer, the manufacturing tolerances for positioning the customers' drilling process must be considered by increasing the hole diameter.

Symbols and terms

Symbol	Meaning	Unit
A	Cross section of coil	mm^2
A_e	Effective magnetic cross section	mm^2
A_L	Inductance factor; $A_L = L/N^2$	nH
A_{L1}	Minimum inductance at defined high saturation ($\triangleq \mu_a$)	nH
A_{min}	Minimum core cross section	mm^2
A_N	Winding cross section	mm^2
A_R	Resistance factor; $A_R = R_{Cu}/N^2$	$\mu\Omega = 10^{-6}\ \Omega$
B	RMS value of magnetic flux density	Vs/m^2, mT
ΔB	Flux density deviation	Vs/m^2, mT
$\hat{B}$	Peak value of magnetic flux density	Vs/m^2, mT
$\Delta\hat{B}$	Peak value of flux density deviation	Vs/m^2, mT
B_{DC}	DC magnetic flux density	Vs/m^2, mT
B_R	Remanent flux density	Vs/m^2, mT
B_S	Saturation magnetization	Vs/m^2, mT
C_0	Winding capacitance	F = As/V
CDF	Core distortion factor	$mm^{-4.5}$
DF	Relative disaccommodation coefficient $DF = d/\mu_i$	
d	Disaccommodation coefficient	
E_a	Activation energy	J
f	Frequency	s^{-1}, Hz
f_{cutoff}	Cut-off frequency	s^{-1}, Hz
f_{max}	Upper frequency limit	s^{-1}, Hz
f_{min}	Lower frequency limit	s^{-1}, Hz
f_r	Resonance frequency	s^{-1}, Hz
f_{Cu}	Copper filling factor	
g	Air gap	mm
H	RMS value of magnetic field strength	A/m
$\hat{H}$	Peak value of magnetic field strength	A/m
H_{DC}	DC field strength	A/m
H_c	Coercive field strength	A/m
h	Hysteresis coefficient of material	10^{-6} cm/A
h/μ_i^2	Relative hysteresis coefficient	10^{-6} cm/A
I	RMS value of current	A
I_{DC}	Direct current	A
$\hat{I}$	Peak value of current	A
J	Polarization	Vs/m^2
k	Boltzmann constant	J/K
k_3	Third harmonic distortion	
k_{3c}	Circuit third harmonic distortion	
L	Inductance	H = Vs/A

Symbols and terms

Symbol	Meaning	Unit
$\Delta L/L$	Relative inductance change	H
L_0	Inductance of coil without core	H
L_H	Main inductance	H
L_p	Parallel inductance	H
L_{rev}	Reversible inductance	H
L_s	Series inductance	H
l_e	Effective magnetic path length	mm
l_N	Average length of turn	mm
N	Number of turns	
P_{Cu}	Copper (winding) losses	W
P_{trans}	Transferrable power	W
P_V	Relative core losses	mW/g
PF	Performance factor	
Q	Quality factor ($Q = \omega L/R_s = 1/\tan \delta_L$)	
R	Resistance	Ω
R_{Cu}	Copper (winding) resistance (f = 0)	Ω
R_h	Hysteresis loss resistance of a core	Ω
ΔR_h	R_h change	Ω
R_i	Internal resistance	Ω
R_p	Parallel loss resistance of a core	Ω
R_s	Series loss resistance of a core	Ω
R_{th}	Thermal resistance	K/W
R_V	Effective loss resistance of a core	Ω
s	Total air gap	mm
T	Temperature	°C
ΔT	Temperature difference	K
T_C	Curie temperature	°C
t	Time	s
t_v	Pulse duty factor	
$\tan \delta$	Loss factor	
$\tan \delta_L$	Loss factor of coil	
$\tan \delta_r$	(Residual) loss factor at $H \rightarrow 0$	
$\tan \delta_e$	Relative loss factor	
$\tan \delta_h$	Hysteresis loss factor	
$\tan \delta/\mu_i$	Relative loss factor of material at $H \rightarrow 0$	
U	RMS value of voltage	V
Û	Peak value of voltage	V
V_e	Effective magnetic volume	mm^3
Z	Complex impedance	Ω
Z_n	Normalized impedance $\lvert Z\rvert_n = \lvert Z\rvert / N^2 \times \varepsilon\ (l_e/A_e)$	Ω/mm

Symbols and terms

Symbol	Meaning	Unit
α	Temperature coefficient (TK)	1/K
α_F	Relative temperature coefficient of material	1/K
α_e	Temperature coefficient of effective permeability	1/K
ε_r	Relative permittivity	
Φ	Magnetic flux	Vs
η	Efficiency of a transformer	
η_B	Hysteresis material constant	mT^{-1}
η_i	Hysteresis core constant	$A^{-1}H^{-1/2}$
λ_s	Magnetostriction at saturation magnetization	
μ	Relative complex permeability	
μ_0	Magnetic field constant	Vs/Am
μ_a	Relative amplitude permeability	
μ_{app}	Relative apparent permeability	
μ_e	Relative effective permeability	
μ_i	Relative initial permeability	
μ_p'	Relative real (inductive) component of $\bar{\mu}$ (for parallel components)	
μ_p''	Relative imaginary (loss) component of $\bar{\mu}$ (for parallel components)	
μ_r	Relative permeability	
μ_{rev}	Relative reversible permeability	
μ_s'	Relative real (inductive) component of $\bar{\mu}$ (for series components)	
μ_s''	Relative imaginary (loss) component of $\bar{\mu}$ (for series components)	
μ_{tot}	Relative total permeability derived from the static magnetization curve	
ρ	Resistivity	Ωm^{-1}
$\Sigma l/A$	Magnetic form factor	mm^{-1}
τ_{Cu}	DC time constant $\tau_{Cu} = L/R_{Cu} = A_L/A_R$	s
ω	Angular frequency; $\omega = 2\,\Pi f$	s^{-1}

All dimensions are given in mm.

SMD Surface-mount device

Important notes

The following applies to all products named in this publication:

1. Some parts of this publication contain **statements about the suitability of our products for certain areas of application**. These statements are based on our knowledge of typical requirements that are often placed on our products in the areas of application concerned. We nevertheless expressly point out **that such statements cannot be regarded as binding statements about the suitability of our products for a particular customer application**. As a rule, EPCOS is either unfamiliar with individual customer applications or less familiar with them than the customers themselves. For these reasons, it is always ultimately incumbent on the customer to check and decide whether an EPCOS product with the properties described in the product specification is suitable for use in a particular customer application.
2. We also point out that **in individual cases, a malfunction of electronic components or failure before the end of their usual service life cannot be completely ruled out in the current state of the art, even if they are operated as specified**. In customer applications requiring a very high level of operational safety and especially in customer applications in which the malfunction or failure of an electronic component could endanger human life or health (e.g. in accident prevention or lifesaving systems), it must therefore be ensured by means of suitable design of the customer application or other action taken by the customer (e.g. installation of protective circuitry or redundancy) that no injury or damage is sustained by third parties in the event of malfunction or failure of an electronic component.
3. **The warnings, cautions and product-specific notes must be observed.**
4. In order to satisfy certain technical requirements, **some of the products described in this publication may contain substances subject to restrictions in certain jurisdictions (e.g. because they are classed as hazardous)**. Useful information on this will be found in our Material Data Sheets on the Internet (www.epcos.com/material). Should you have any more detailed questions, please contact our sales offices.
5. We constantly strive to improve our products. Consequently, **the products described in this publication may change from time to time**. The same is true of the corresponding product specifications. Please check therefore to what extent product descriptions and specifications contained in this publication are still applicable before or when you place an order. We also **reserve the right to discontinue production and delivery of products**. Consequently, we cannot guarantee that all products named in this publication will always be available. The aforementioned does not apply in the case of individual agreements deviating from the foregoing for customer-specific products.
6. Unless otherwise agreed in individual contracts, **all orders are subject to the current version of the "General Terms of Delivery for Products and Services in the Electrical Industry" published by the German Electrical and Electronics Industry Association (ZVEI)**.
7. The trade names EPCOS, BAOKE, Alu-X, CeraDiode, CeraLink, CSMP, CSSP, CTVS, DeltaCap, DigiSiMic, DSSP, FilterCap, FormFit, MiniBlue, MiniCell, MKD, MKK, MLSC, MotorCap, PCC, PhaseCap, PhaseCube, PhaseMod, PhiCap, SIFERRIT, SIFI, SIKOREL, SilverCap, SIMDAD, SiMic, SIMID, SineFormer, SIOV, SIP5D, SIP5K, ThermoFuse, WindCap are **trademarks registered or pending** in Europe and in other countries. Further information will be found on the Internet at www.epcos.com/trademarks.

Mouser Electronics

Authorized Distributor

Click to View Pricing, Inventory, Delivery & Lifecycle Information:

EPCOS / TDK:
B65814B2203X000

Компания «ЭлектроПласт» предлагает заключение долгосрочных отношений при поставках импортных электронных компонентов на взаимовыгодных условиях!

Наши преимущества:

- Оперативные поставки широкого спектра электронных компонентов отечественного и импортного производства напрямую от производителей и с крупнейших мировых складов;
- Поставка более 17-ти миллионов наименований электронных компонентов;
- Поставка сложных, дефицитных, либо снятых с производства позиций;
- Оперативные сроки поставки под заказ (от 5 рабочих дней);
- Экспресс доставка в любую точку России;
- Техническая поддержка проекта, помощь в подборе аналогов, поставка прототипов;
- Система менеджмента качества сертифицирована по Международному стандарту ISO 9001;
- Лицензия ФСБ на осуществление работ с использованием сведений, составляющих государственную тайну;
- Поставка специализированных компонентов (Xilinx, Altera, Analog Devices, Intersil, Interpoint, Microsemi, Aeroflex, Peregrine, Syfer, Eurofarad, Texas Instrument, Miteq, Cobham, E2V, MA-COM, Hittite, Mini-Circuits,General Dynamics и др.);

Помимо этого, одним из направлений компании «ЭлектроПласт» является направление «Источники питания». Мы предлагаем Вам помощь Конструкторского отдела:

- Подбор оптимального решения, техническое обоснование при выборе компонента;
- Подбор аналогов;
- Консультации по применению компонента;
- Поставка образцов и прототипов;
- Техническая поддержка проекта;
- Защита от снятия компонента с производства.

Как с нами связаться

Телефон: 8 (812) 309 58 32 (многоканальный)
Факс: 8 (812) 320-02-42
Электронная почта: org@eplast1.ru
Адрес: 198099, г. Санкт-Петербург, ул. Калинина, дом 2, корпус 4, литера А.