UNCONTROLLED DOCUMENT

PART NUMBER	REV.
LCM–E01602DSR	D

REV.	E.C.N. NUMBER AND REVISION COMMENTS	DATE
A	E.C.N. #10677.	11.10.00
B	E.C.N. #10707.	1.17.01
C	E.C.N. #10723.	3.19.01
D	E.C.N. #11148.	02.13.07

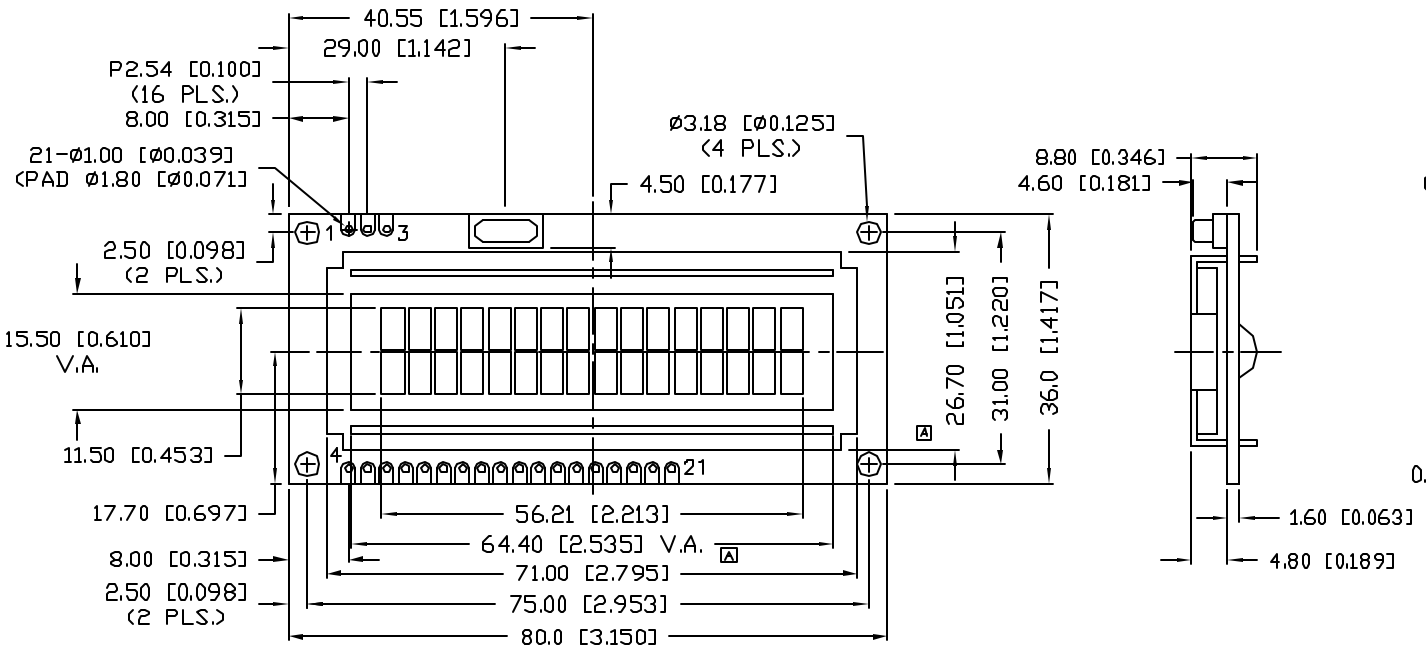

CHARACTER DETAIL

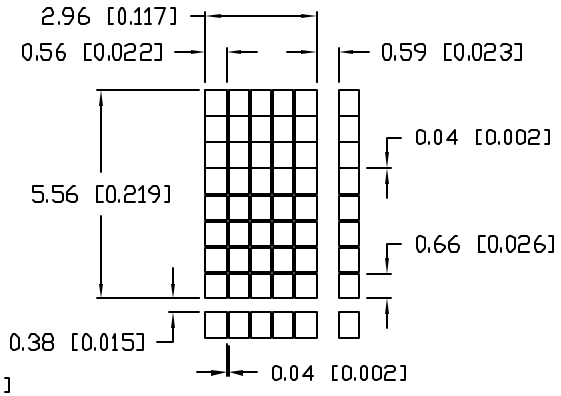

CAUTION: STATIC SENSITIVE DEVICE
FOLLOW PROPER E.S.D. HANDLING PROCEDURES
WHEN WORKING WITH THIS PART.

UNCONTROLLED DOCUMENT

*UNLESS OTHERWISE SPECIFIED TOLERANCES PER DECIMAL PRECISION ARE: X=±1 (±0.039), X.X=±0.5 (±0.020), X.XX=±0.25 (±0.010), X.XXX=±0.127 (±0.005). LEAD SIZE=±0.05 (±0.002), LEAD LENGTH=±0.75 (±0.030). MIN= +DECIMAL PRECISION −0.00 MAX.= +0.00 −DECIMAL PRECISION

REV.	PART NUMBER
D	LCM–E01602DSR

5.56 CHARACTER HEIGHT, 16 x 2 CHARACTERS, LCD MODULE, 5 x 8 DOT MATRIX, SERIAL INPUT, STN, REFLECTIVE.

CONFIDENTIAL INFORMATION
THE INFORMATION CONTAINED IN THIS DOCUMENT IS THE PROPERTY OF LUMEX INC. EXCEPT AS SPECIFICALLY AUTHORIZED IN WRITING BY LUMEX INC., THE HOLDER OF THIS DOCUMENT SHALL KEEP ALL INFORMATION CONTAINED HEREIN CONFIDENTIAL AND SHALL PROTECT SAME IN WHOLE OR IN PART FROM DISCLOSURE AND DISSEMINATION TO ALL THIRD PARTIES.

RELIABILITY NOTE
OUR MANY YEARS OF EXPERIENCE DATA ACCUMULATION INDICATE THAT SOLDER HEAT IS A MAJOR CAUSE OF EARLY AND FUTURE FAILURE. PLEASE PAY ATTENTION TO YOUR SOLDERING PROCESS.

LUMEX
290 E. HELEN ROAD
PALATINE, IL 60067–6976
PHONE: +1.847.359.2790
US WEB: www.lumex.com
TW WEB: www.lumex.com.tw

DRAWN BY:	CHECKED BY:	APPROVED BY:	DATE: 10.12.00
JC			PAGE: 1 OF 3
			SCALE: N/A

REV.	E.C.N. NUMBER AND REVISION COMMENTS	DATE
	SEE PAGE 1.	

PIN CONFIGURATION

PIN NO.	SYMBOL	I/O	FUNCTION	
1	Vss	I	POWER SUPPLY	GND (0V)
2	VDD	I		3.3V
3	RXD	I		SERIAL DATA
4~11	P1.0~1.7	I/O	8-BIT BIDIRECTIONAL I/O PORT	
12~17	P3.1~3.5,3.7	I/O	BIDIRECTIONAL I/O PORT WITH INTERNAL PULLUP	
18	XTAL1	I	INPUT TO INVERTING OSCILLATOR AMPLIFIER & INTERNAL CLOCK OPERATING CIRCUIT	
19	RST	I	RESET FOR AT89C2051	
20	Vss	I	GND (0V)	
21	Vcc	I	SUPPLY VOLTAGE FOR AT89C2051	

BLOCK DIAGRAM

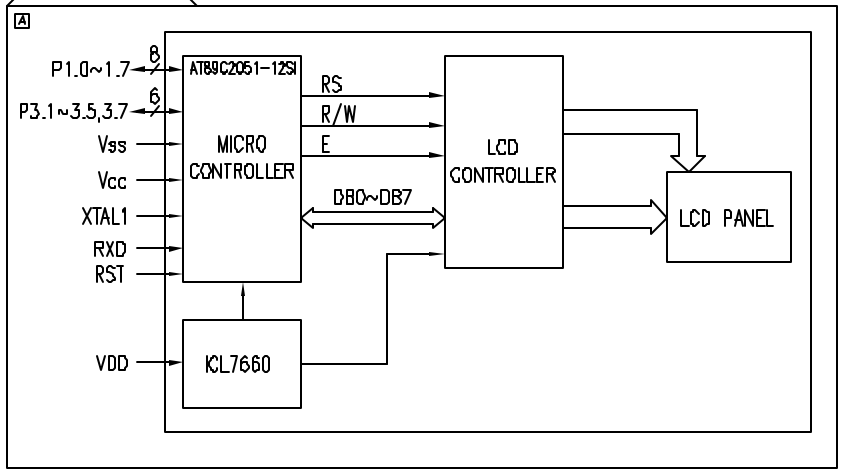

ELECTRICAL CHARACTERISTICS

ITEM	SYMBOL	CONDITION	STANDARD VALUE			UNIT
			MIN.	TYP.	MAX.	
SUPPLY VOLTAGE	Vcc	–	2.7	–	6.0	V
SUPPLY CURRENT	Icc	ACTIVE MODE 12MHz, Vcc=3V	–	–	5.5	mA
SUPPLY VOLTAGE FOR LCD DRIVE	Vo	Ta=25°C	–	0.8	–	V

ABSOLUTE MAXIMUM RATINGS

ITEM	SYMBOL	STANDARD VALUE		UNIT
		MIN	MAX	
SUPPLY VOLTAGE	Vcc	–	6.6	V
VOLTAGE ON ANY PIN W/RESPECT TO GND	–	-1.0	+7.0	V
DC OUTPUT CURRENT	Iout	Icc	25.0	mA
OPERATING TEMPERATURE	Topr	-20	70	°C
STORAGE TEMPERATURE	Tstg	-30	85	°C

NOTES:

1. 10K~20K POTENTIOMETER ON PCB TO ADJUST CONTRAST.

*UNLESS OTHERWISE SPECIFIED TOLERANCES PER DECIMAL PRECISION ARE: X=±1 (±0.039), X.X=±0.5 (±0.020), X.XX=±0.25 (±0.010), X.XXX=±0.127 (±0.005). LEAD SIZE=±0.05 (±0.002), LEAD LENGTH=±0.75 (±0.030). MIN= +DECIMAL PRECISION -0.00 MAX.= +0.00 -DECIMAL PRECISION

5.56 CHARACTER HEIGHT, 16 x 2 CHARACTERS, LCD MODULE, 5 x 8 DOT MATRIX, SERIAL INPUT, STN, REFLECTIVE.

CONFIDENTIAL INFORMATION
THE INFORMATION CONTAINED IN THIS DOCUMENT IS THE PROPERTY OF LUMEX INC. EXCEPT AS SPECIFICALLY AUTHORIZED IN WRITING BY LUMEX INC., THE HOLDER OF THIS DOCUMENT SHALL KEEP ALL INFORMATION CONTAINED HEREIN CONFIDENTIAL AND SHALL PROTECT SAME IN WHOLE OR IN PART FROM DISCLOSURE AND DISSEMINATION TO ALL THIRD PARTIES.

RELIABILITY NOTE
OUR MANY YEARS OF EXPERIENCE DATA ACCUMULATION INDICATE THAT SOLDER HEAT IS A MAJOR CAUSE OF EARLY AND FUTURE FAILURE. PLEASE PAY ATTENTION TO YOUR SOLDERING PROCESS.

LUMEX
290 E. HELEN ROAD
PALATINE, IL 60067-6976
PHONE: +1.847.359.2790
US WEB: www.lumex.com
TW WEB: www.lumex.com.tw

DRAWN BY:	CHECKED BY:	APPROVED BY:	DATE: 10.12.00
JC			PAGE: 2 OF 3
			SCALE: N/A

UNCONTROLLED DOCUMENT

PART NUMBER	REV.
LCM-E01602DSR	D

REV.	E.C.N. NUMBER AND REVISION COMMENTS	DATE
	SEE PAGE 1.	

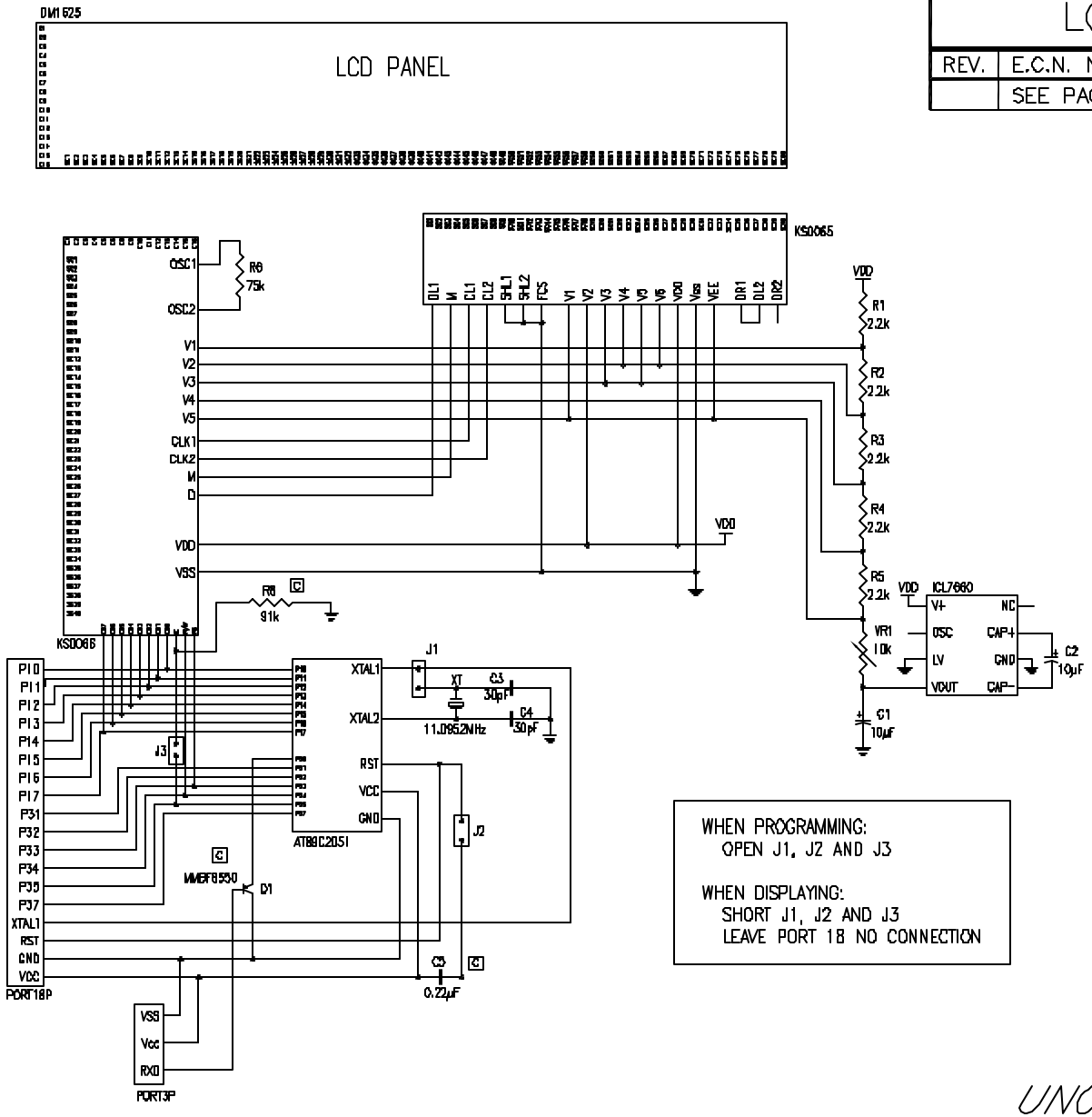

WHEN PROGRAMMING:
OPEN J1, J2 AND J3

WHEN DISPLAYING:
SHORT J1, J2 AND J3
LEAVE PORT 18 NO CONNECTION

UNCONTROLLED DOCUMENT

REV.	PART NUMBER
D	LCM-E01602DSR

5.56 CHARACTER HEIGHT, 16 x 2 CHARACTERS, LCD MODULE, 5 x 8 DOT MATRIX, SERIAL INPUT, STN, REFLECTIVE.

CONFIDENTIAL INFORMATION
THE INFORMATION CONTAINED IN THIS DOCUMENT IS THE PROPERTY OF LUMEX INC. EXCEPT AS SPECIFICALLY AUTHORIZED IN WRITING BY LUMEX INC., THE HOLDER OF THIS DOCUMENT SHALL KEEP ALL INFORMATION CONTAINED HEREIN CONFIDENTIAL AND SHALL PROTECT SAME IN WHOLE OR IN PART FROM DISCLOSURE AND DISSEMINATION TO ALL THIRD PARTIES.

RELIABILITY NOTE
OUR MANY YEARS OF EXPERIENCE DATA ACCUMULATION INDICATE THAT SOLDER HEAT IS A MAJOR CAUSE OF EARLY AND FUTURE FAILURE. PLEASE PAY ATTENTION TO YOUR SOLDERING PROCESS.

LUMEX
290 E. HELEN ROAD
PALATINE, IL 60067-6976
PHONE: +1.847.359.2790
US WEB: www.lumex.com
TW WEB: www.lumex.com.tw

DRAWN BY:	CHECKED BY:	APPROVED BY:	DATE: 10.12.00
JC			PAGE: 3 OF 3
			SCALE: N/A

Компания «ЭлектроПласт» предлагает заключение долгосрочных отношений при поставках импортных электронных компонентов на взаимовыгодных условиях!

Наши преимущества:

- Оперативные поставки широкого спектра электронных компонентов отечественного и импортного производства напрямую от производителей и с крупнейших мировых складов;
- Поставка более 17-ти миллионов наименований электронных компонентов;
- Поставка сложных, дефицитных, либо снятых с производства позиций;
- Оперативные сроки поставки под заказ (от 5 рабочих дней);
- Экспресс доставка в любую точку России;
- Техническая поддержка проекта, помощь в подборе аналогов, поставка прототипов;
- Система менеджмента качества сертифицирована по Международному стандарту ISO 9001;
- Лицензия ФСБ на осуществление работ с использованием сведений, составляющих государственную тайну;
- Поставка специализированных компонентов (Xilinx, Altera, Analog Devices, Intersil, Interpoint, Microsemi, Aeroflex, Peregrine, Syfer, Eurofarad, Texas Instrument, Miteq, Cobham, E2V, MA-COM, Hittite, Mini-Circuits,General Dynamics и др.);

Помимо этого, одним из направлений компании «ЭлектроПласт» является направление «Источники питания». Мы предлагаем Вам помощь Конструкторского отдела:

- Подбор оптимального решения, техническое обоснование при выборе компонента;
- Подбор аналогов;
- Консультации по применению компонента;
- Поставка образцов и прототипов;
- Техническая поддержка проекта;
- Защита от снятия компонента с производства.

Как с нами связаться

Телефон: 8 (812) 309 58 32 (многоканальный)
Факс: 8 (812) 320-02-42
Электронная почта: org@eplast1.ru
Адрес: 198099, г. Санкт-Петербург, ул. Калинина, дом 2, корпус 4, литера А.